DENON

Hi-Fi Digital AV Pre-amplifier

SERVICE MANUAL

MODEL AVP-A1

DIGITAL AV PRE-AMPLIFIER

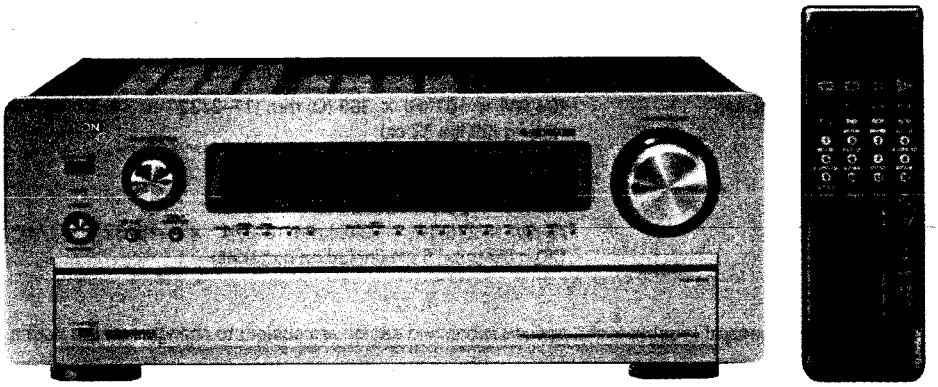

CONTENTS

NIPPON COLUMBIA CO., LTD.

SPECIFICATIONS

- **Audio section**

(Analog)	
Input sensitivity / input impedance:	200 mV/47 kΩ / kohms
Frequency response:	10 Hz ~ 100 kHz: +0, −3 dB (DIRECT mode)
S / N:	105 dB (DIRECT mode)
Distortion:	0.005% (20 Hz ~ 20 kHz) (DIRECT mode)
Rated output / maximum output:	1.2 V/8 V
Maximum headphones output:	284 mW (8 Ω/ohms)
(Digital)	
D / A output:	Rated output – 2 V (at 0 dB playback) Total harmonic distortion – 0.005% (1 kHz, at 0 dB) S/N ratio – 102 dB Dynamic range – 96 dB
Digital input:	Format – Digital audio interface

- **Video section**

(Standard video jacks)	
Input / output level and impedance:	1 Vp–p, 75 Ω / ohms
Frequency response:	5 Hz ~ 10 MHz +0, −3 dB
(S-video jacks)	
Input / output level and impedance:	Y (brightness) signal – 1 Vp–p, 75 Ω/ohms C (color) signal – 0.286 Vp–p, 75 Ω/ohms
Frequency response:	5 Hz ~ 10 MHz +0, −3 dB

- **General**

Power supply:	AC 230 V, 50 Hz
Power consumption:	60 W
Maximum external dimensions:	434 (W) × 167 (H) × 396 (D) mm (17–3/32" × 6–37/64" × 15–19/32")
Weight:	13.5 kg (29 lbs 13 oz)

- **Remote control unit (RC–809)**

Batteries:	R6P/AA Type (two batteries)
External dimensions:	70 (W) × 215 (H) × 19 (D) mm (2–3/4" × 8–15/32" × 3/4")
Weight:	180 g (Approx. 6 oz) (including batteries)

* For purposes of improvement, specifications and design are subject to change without notice.

• SAFETY PRECAUTIONS

CAUTION

RISK OF ELECTRIC SHOCK

DO NOT OPEN

CAUTION: TO REDUCE THE RISK OF ELECTRIC SHOCK, DO NOT REMOVE COVER (OR BACK). NO USER SERVICEABLE PARTS INSIDE. REFER SERVICING TO QUALIFIED SERVICE PERSONNEL.

The lightning flash with arrowhead symbol, within an equilateral triangle, is intended to alert the user to the presence of uninsulated "dangerous voltage" within the product's enclosure that may be of sufficient magnitude to constitute a risk of electric shock to persons.

The exclamation point within an equilateral triangle is intended to alert the user to the presence of important operating and maintenance (servicing) instructions in the literature accompanying the appliance.

WARNING: TO REDUCE THE RISK OF FIRE OR ELECTRIC SHOCK, DO NOT EXPOSE THIS APPLIANCE TO RAIN OR MOISTURE.

• 安全事項

CAUTION

RISK OF ELECTRIC SHOCK

DO NOT OPEN

注意：為減少觸電危險，切勿拆下機殼（或機背）。機身內並無用戶修理用零件。請交由專業修理人員修理本機。

三角形內有箭頭的閃電符號旨在提醒用戶，本產品機殼內有未經絕緣的"危險電壓"，其幅度足以使人觸電而發生危險。

三角形內加感嘆號旨在提醒用戶，有重要的操作與維修說明書配合本機。

警告：為減少着火或觸電危險，切勿讓本機受雨淋濕或受潮。

TABLE OF CONTENTS

• ACCESSORIES

Check that the following parts are included in addition to the main unit:

①	Operating instructions 1	②	Remote control unit (RC-809) 1
③	R6P/AA batteries 2	④	AC power cord 1

1 NOTE ON USE

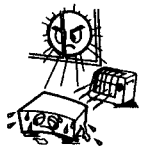

- Avoid high temperatures
  Allow for sufficient heat dispersion when installed on a rack.

- Keep the set free from moisture, water, and dust.

- Do not let foreign objects in the set.

- Unplug the power cord when not using the set for long periods of time.

- Do not let insecticides, benzene, and thinner come in contact with the set.

- Handle the power cord carefully. Hold the plug when unplugging the cord.

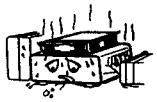

*(For sets with ventilation holes)

- Do not obstruct the ventilation holes.

- Never disassemble or modify the set in any way.

2 BEFORE USING

Pay attention to the following before using this unit:

- **Moving the set**
  To prevent short circuits or damaged wires in the connection cords, always unplug the power cord and disconnect the connection cords between all other audio components when moving the set.

- **Before turning the power switch on**
  Check once again that all connections are proper and that there are not problems with the connection cords. Always set the power switch to the standby position before connecting and disconnecting connection cords.

3 CAUTIONS ON INSTALLATION

Noise or disturbance of the picture may be generated if this unit or any other electronic equipment using microprocessors is used near a tuner or TV.
If this happens, take the following steps:

- Install this unit as far as possible from the tuner or TV.
- Set the antenna wires from the tuner or TV away from this unit's power cord and input/output connection cords.
- Noise or disturbance tends to occur particularly when using indoor antennas or 300 Ω/ohms feeder wires. **We recommend using outdoor antennas and 75 Ω/ohms coaxial cables.**

When stacking

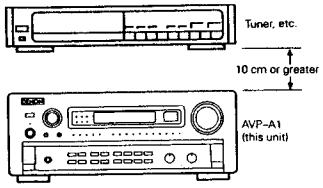

To allow the heat to be dispersed, do not set an AV component directly on this unit. Leave a space of at least 10cm.

4 CAUTIONS ON HANDLING

- **Switching the input function when input jacks are not connected**
  A clicking noise may be produced if the input function is switched when nothing is connected to the input jacks. If this happens, either turn down the MASTER VOLUME control or connect components to the input jacks.

- **Muting of PRE OUT jacks**
  The PRE OUT jacks include a muting circuit. Because of this, the output signals are greatly reduced for several seconds after the power switch is turned on or input function, surround mode or any other set-up is changed. If the volume is turned up during this time, the output will be very high after the muting circuit stops functioning. Always wait until the muting circuit turns off before adjusting the volume.

- **Store this instructions in a safe place.**
  After reading, store this instructions in a safe place. Also fill in the items on the back page for your convenience.

- **Note that the illustrations in this instructions may differ from the actual set for explanation purposes.**

- **Opening and closing the door**
  This unit has a door on the front panel. Press the "PUSH OPEN" mark on the upper right side of the door to unlatch and open it. To close it, press it until a click is heard.

NOTE: The door opens out automatically once it is unlatched, but it may stop halfway. This is not a malfunction. In this case, pull down the door lightly to open it.

5 CONNECTIONS

- Do not plug in the power cord until all connections have been completed.
- Be sure to connect the left and right channels properly (left with left, right with right).
- Insert the plugs securely. Incomplete connections will result in the generation of noise.
- **Use the AC OUTLETS for audio equipment only. Do not use them for hair driers, etc.**
- Note that binding pin plug cords together with power cords or placing them near a power transformer will result in generating hum or other noise.
- Noise or humming may be generated if a connected audio equipment is used independently without turning the power of this unit on. If this happens, turn on the power of the this unit.

5-1 Connecting the audio components

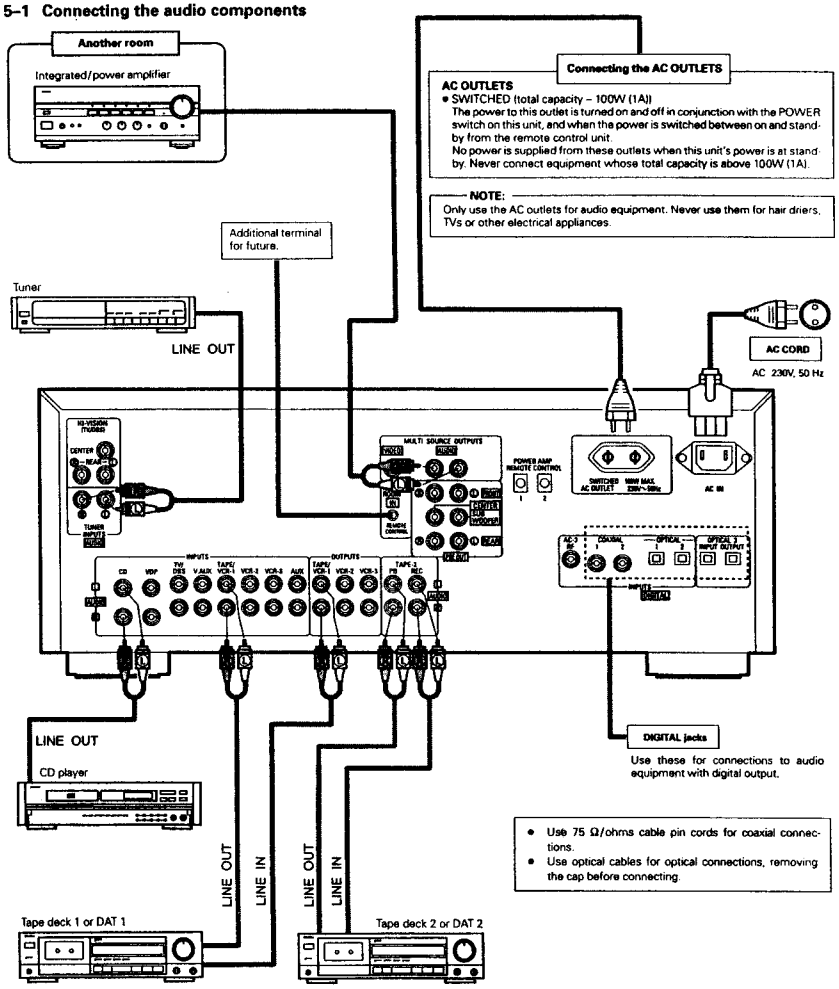

5-2 Connecting the video equipments

To connect the video signal, connect using a 75 Ω/ohms video signal cable cord. Using an improper cable can result in a drop in sound quality.

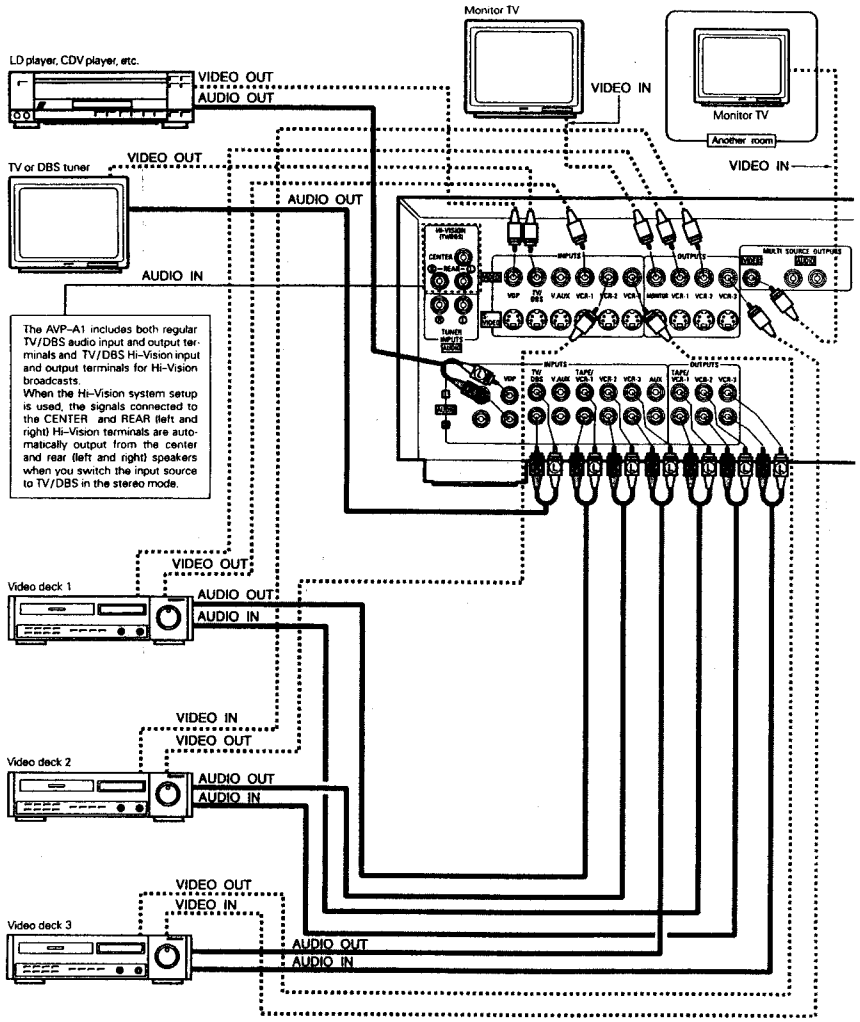

5-3 Connecting the S-video terminals

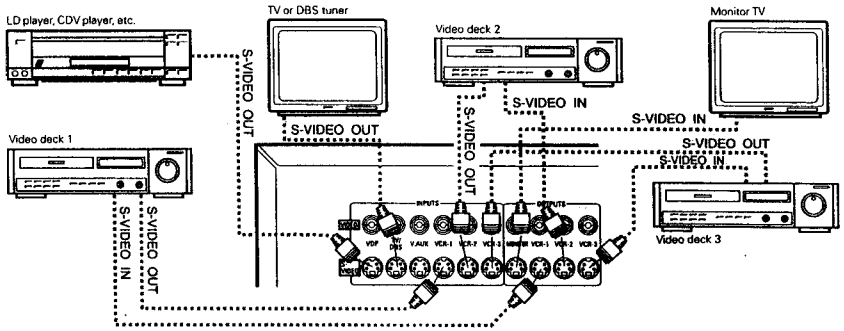

- **A note on the S input jacks**
  The input selectors for the S inputs and pin jack inputs work in conjunction with each other.
- **Precaution when using S-jacks**
  This unit's S-jacks (input and output) and video pin jacks (input and output) have independent circuit structures, so that video signals input from the S-jacks are only output from the S-jack outputs and video signals input from the pin jacks are only output from the pin jack outputs. When connecting this unit with equipment that is equipped with S-jacks, keep the above point in mind and make connections according to the equipment's instruction manuals.

5-4 Connecting the video equipments with Digital jacks

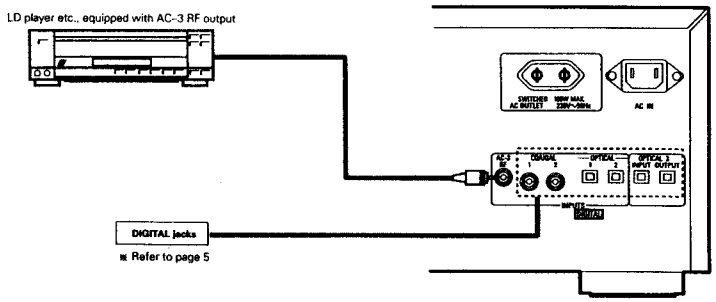

5-5 Connections with the power amplifier

- For optimal multichannel sound performance, we recommend the use of THX® certificated power amplifiers (such as the DENON POA-T2 and POA-T3) and THX loudspeaker systems.

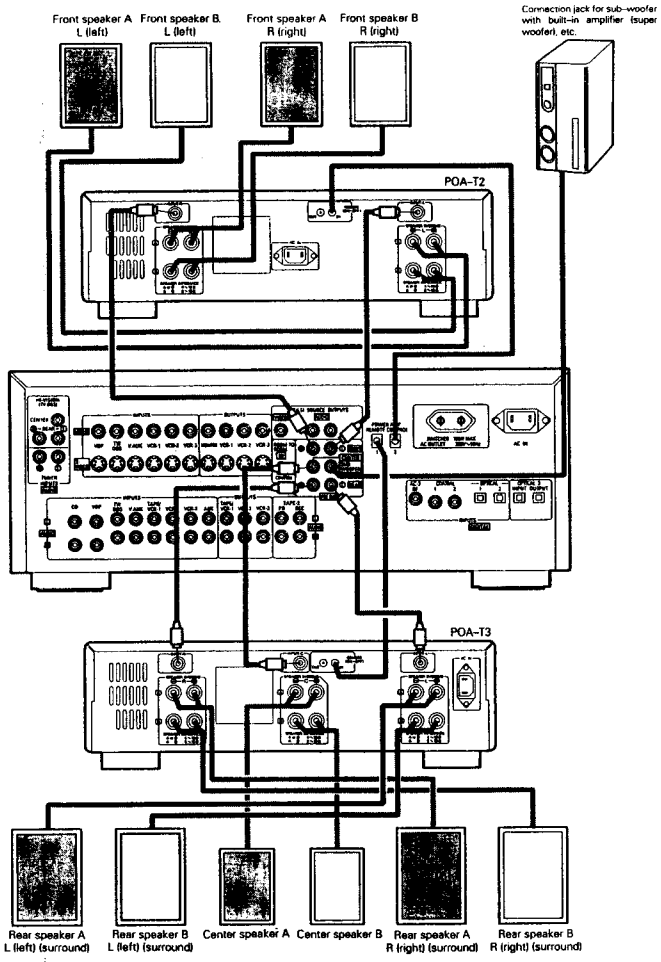

- **Precautions when connecting speakers**
  If a speaker is placed near a TV or video monitor, the colors on the screen may be disturbed by the speaker's magnetism. If this should happen, move the speaker away to a position where it does not have this effect.

- **POWER AMPLIFIER REMOTE CONTROL jacks**
  These jacks are for setting Denon power amplifiers to the on-standby mode in link with the POWER switch on this unit. Use the cables included with the power amplifier for connection. Up to two power amplifiers can be controlled.

6 SYSTEM SETUP

After connections with other components have been made, make the various settings on the monitor using this unit's on-screen display. These settings must be made in order to complete the AV system in your listening room.

NOTES:
- The output from the S MONITOR OUT terminal has priority for the on-screen display. If you want to always output the on-screen display signals to the video output, do not connect a cable to the S MONITOR OUT terminal.
- The on-screen display is not displayed for the MULTI SOURCE MONITOR OUT terminal.
- This model's on-screen function is designed for high resolution monitor displays. Small characters may be difficult to read on small displays or low resolution TVs.

Use the following buttons on the remote control unit to make the settings:

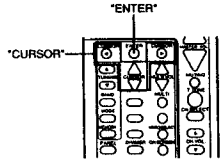

"ENTER" button
Press this to switch the display on the screen.
Also use this button to complete the setting on the screen.

"CURSOR" buttons
◀ and ▶ : Use these to move the cursors (◀ and ▶) to the left and right on the screen.
△ and ▽ : Use these to move the cursors (▲ and ▼) up and down on the screen.

6-1 Before Setting Up the System

1. Turn on the power and press the ENTER button.
   The "Menu" screen (screen 1) appears on the monitor.


```
Menu

▫System Setup
▼
 Surround Parameters

 Menu Off
```

(screen 1)

2. Use the CURSOR buttons to specify "System Setup".

3. Press the ENTER button to switch the screen.

The "System Setup Menu" screen (screen 2) appears on the monitor.

```
System Setup Menu

▫Speaker Configuration
▼Delay Time
 Channel Level
 Subwoofer Peak Limit Lev.
 Digital Inputs
 AC-3
 Hi-Vision
 Setup Menu Off
```

(screen 2)

6-2 Setting the Speaker Configuration

1. Use the CURSOR buttons to specify "Speaker Configuration".

2. Press the ENTER button.

The "Speaker Configuration Menu" screen (screen 3) appears on the monitor.

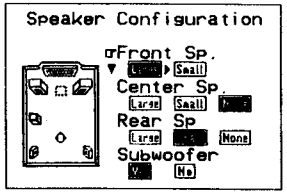

(screen 3)

3. Use the CURSOR buttons and select the different types of speakers connected and their size parameters.

To select the speakers: To select the parameters:

※ Large: Select this when using speakers that can fully reproduce low sounds of below 80 Hz.

※ Small: Select this when using speakers that cannot reproduce low sounds of below 80 Hz with sufficient volume.
When this setting is selected, low frequencies of below 80 Hz are assigned to the subwoofer.

※ To take full advantage of the performance of the Home THX certified speaker systems, set the front, center and rear speaker size parameters to "Small" and the subwoofer to "Yes".
The selected parameters are highlighted.

4. After the above selections are completed, press the ENTER button again.
The "System Setup Menu" screen reappears.

6-3 Setting the Delay Time

Input the listening position and the distance of the different speakers.1.

1. Use the CURSOR buttons to specify "Delay Time" from the "System Setup Menu" screen (screen 4).

2. Press the ENTER button.

The "Delay Time" screen (screen 5) appears on the monitor.

3. Use the CURSOR buttons to specify the unit of distance.

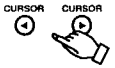

NOTE: The settings are reset to their initial values when switching between meters and feet.

4. Use the CURSOR buttons to input the listening position and the distance of the different speakers. (screen 6-A)

To select the speakers: To select the distance:

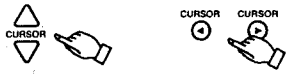

※ Select "Default" to return to the initial settings.

5. After the above selections are completed, press the ENTER button again.
The "System Setup Menu" screen reappears.
This procedure automatically sets the optimum surround delay time for the listening room.

```
System Setup Menu

▲Speaker Configuration
▫Delay Time
▼Channel Level
 Subwoofer Peak Limit Lev.
 Digital Inputs
 AC-3
 Hi-Vision
 Setup Menu Off
```

(screen 4)

```
Delay Time

Set The Distance To
Each Speakers

Do You Prefer
  In Meter? / In Feet?

▫Meter ◀:▶ Feet
```

(screen 5)

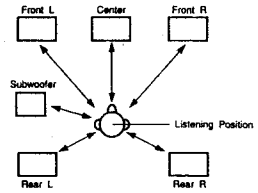


```
Delay Time

▫Front L&R ◀ 15ft ▶
▼Center      12ft
 Rear L      10ft
 Rear R      10ft
 Subwoofer   10ft

Default      Yes◀
```

(screen 6-A)

※ Please note that the difference of distance for every speaker should be 15 ft (4.5 m) or less. If you set an invalid distance, a CAUTION notice, such as screen 6-B will appear. In this case, please relocate the blinking speaker(s) so that its distance is no larger than the value shown in highlighted line. Then press the ENTER button again.

```
Delay Time   CAUTION!
RELOCATE BLINKING SPK
Front L&R    15ft
Center       12ft
Rear L       1ft
▲Rear R      1ft
▫Subwoofer   ◀16ft▶
▼
Default      Yes◀
```

(screen 6-B)

6-4 Setting the Channel Level

Use test tones to adjust the volume of the different speakers.

1. Use the CURSOR buttons to specify "Channel Level" from the "System Setup Menu" screen. (screen 7)

2. Press the ENTER button.

The "Channel Level" screen (screen 8) appears on the monitor.

3. Use the CURSOR buttons to select "Test Tone Mode", then select "Auto" or "Manual".

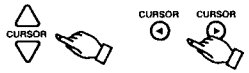

4. Use the CURSOR buttons to select "Test Tone Start", then select "Yes".

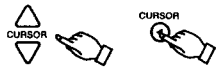

5. a. If the "Auto" mode is selected:
Test tones are automatically emitted from the different speakers. The test tones are emitted from the different speakers in the following order, at 4-second intervals the first time and second time around, 2-second intervals the third time around and on:

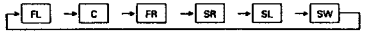

Use the CURSOR buttons to adjust all the speakers to the same volume. (screen 9)

b. If the "Manual" mode is selected:
Use the cursor buttons to select the speakers from which to emit the test tones and adjust the volume. (screen 10)

To adjust the volume: To select the speaker:

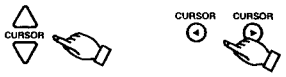

The level of each channel should be adjusted to 75 dB (C-weighted, slow meter mode) on a sound level meter at the listening position.
If a sound level meter is not available adjust the channels by ear so the sound levels are the same. Because adjusting the subwoofer level test tone by ear is difficult, use a well known music selection and adjust for natural balance.
NOTE: When adjusting the level of an active subwoofer system, you may also need to adjust the subwoofer's own volume control.

```
System Setup Menu

 Speaker Configuration
▲Delay Time
▫Channel Level
▼Subwoofer Peak Limit Lev.
 Digital Inputs
 AC-3
 Hi-Vision
 Setup Menu Off
```

(screen 7)

```
Channel Level

▫Level Clear
▼            Yes◀

Test Tone Mode
             ◀:▶ Manual

Test Tone Start
             Yes◀
```

(screen 8)

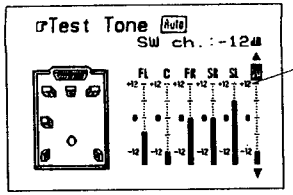

The test tone is emitted from the speaker whose indicator is highlighted.

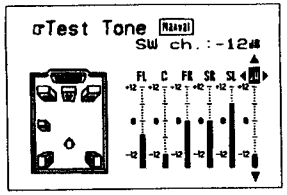

(screen 9) (screen 10)

6. After the above settings are completed, press the ENTER button again.
   The "System Setup Menu" screen reappears.
   To cancel the settings, select "Level Clear" and "Yes" on the "Channel Level" screen, then make the settings again.
   NOTE: 1. The output channel levels for all the surround modes are set to the same conditions when the channel level setting on the system setup menu is conducted.
   2. When the level clear operation is performed, all channel levels for all modes are set to 0 dB.

The speaker volume adjustment using the test tones can be performed from the remote control unit as well as from the "System Setup Menu".

1. Press the Test Tone button

2. Test tones are emitted from the different speakers. Adjust so that the volumes of the all the speakers are equal.

3. Turn the test tone off.

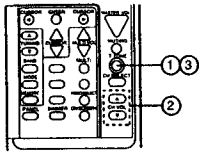

✱ The remote control unit's T.TONE button can only be used when in the DOLBY SURROUND and THX CINEMA modes.
NOTE: Only the "Auto" mode can be used when the test tone button is pressed. In addition, the adjusted output level is only backed up for the Dolby Surround or THX Cinema mode.

6-5 Subwoofer Peak Limit Level Setting

This unit features a subwoofer peak limit control which prevents distortion and damage in the loudspeaker system by controlling the maximum bass volume level. With this feature you may set the maximum bass level for the system. This feature operates with or without a subwoofer in the system.

1. Use the CURSOR buttons to specify "Subwoofer Peak Limit Lev." from the "System Setup Menu" screen. (screen 11)

2. Press the ENTER button.

The "Subwoofer Peak Limit Level Setting" screen (screen 12) appears.

```
System Setup Menu

 Speaker Configuration
 Delay Time
▲Channel Level
 Subwoofer Peak Limit Lev.
▼Digital Inputs
 AC-3
 Hi-Vision
 Setup Menu Off
```

(screen 11)

```
Subwoofer Peak
 Limit Level Setting

Find The Level When
Distortion Begins.

 Peak Limiter Off      Yes
▼Setting Start         Yes
```

(screen 12)

3. Use the CURSOR buttons to select "Setting Start" and "Yes".

The screen changes (screen 13) and a test noise is output from the subwoofer.
(Clear the subwoofer's peak limit level setting by specifying "Setting Clear" and "Yes".)

4. Use the right CURSOR button to increase the test noise output level until the loudspeaker system's bass sound is distorted. Bass distortion can be heard as an obvious overload.
   When you hear that the bass sound is distorted, press the down CURSOR button.

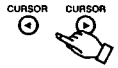

This unit automatically sets the subwoofer peak limit level so the bass level will never be louder than the test noise signal.

5. Press the ENTER button to complete the setting, or press the left CURSOR button and select "Want To Try Again?" and "Yes" to redo the setting. (screen 14)
6. To redo the setting, press the left CURSOR button at the new screen to select "Are You Sure" and "Yes" (screen 15), then repeat from step 3.

```
Subwoofer Peak
 Limit Level Setting

Push ▼ When Distortion
Begins While Turning
Up The Volume
By Cursor ▶ Button.

◀(-16dB)▶
```

(screen 13)

```
Subwoofer Peak
 Limit Level Setting


Want To Try Again?  Yes
```

(screen 14)

```
Subwoofer Peak
 Limit Level Setting


Are You Sure?       Yes
```

(screen 15)

6-6 Digital Input Setup

Input the types of components connected to the digital input terminals.

1. Use the CURSOR buttons to specify "Digital Inputs" from the "System Setup Menu" screen. (screen 16)

2. Press the ENTER button.

The "Digital Input Setup" screen appears. (screen 17)

```
System Setup Menu

 Speaker Configuration
 Delay Time
 Channel Level
▲Subwoofer Peak Limit Lev.
 Digital Inputs
▼AC-3
 Hi-Vision
 Setup Menu Off
```

(screen 16)

3. Use the cursor buttons to input the types of components connected to the digital input terminals.

To select the input terminal:

To select the type of component:

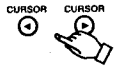

COAXIAL 1	CD
COAXIAL 2	T/VCR-1
OPTICAL 1	TV/DBS
OPTICAL 2	VDP
OPTICAL 3	VCR-3

Table 6-6 Initial Settings

※ Select "OFF" if nothing is connected.

Select "Default" to return to the initial settings.
The initial settings are set as shown on Table 6-6.

NOTES:
- OPTICAL 3 INPUT is equipped with optical output for digital recording to DAT, MD or Digital VCR.
  Connect the optical recording devices to the input/output of OPTICAL 3 for digital recording.
  For "OPTICAL-3", CD, AUX, VDP, TV/DBS and V.AUX cannot be set.
- When you connect such a recording device to OPTICAL 3 OUTPUT, the output of the device is allowed to be connected only to OPTICAL 3 INPUT.
  Invalid connection may cause a trouble, such as noise arising or serious damage to loudspeakers or amplifiers, etc.

4. After the above settings are completed, press the ENTER button again.
   The "System Setup Menu" screen reappears.

6-7 AC-3

When playing AC-3 sources, the input level is corrected automatically.
Set the dialog normalization function.

1. Use the CURSOR buttons to specify "AC-3" from the System Setup Menu screen. (Screen 18)

2. Press the ENTER button.

The "AC-3" screen appears. (Screen 19)

3. Use the CURSOR buttons to select "ON" or "OFF".

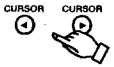

When playing AC-3 sources

NOTE: If dialog normalization is set to "OFF", it may not be possible to set the master volume to greater than −5 dB, depending on the number of speakers and the output channel level setting.
In the HOME THX CINEMA mode as well, even if dialog normalization is set to "ON", it may not be possible to set the master volume to greater than −5 dB depending on the above conditions.

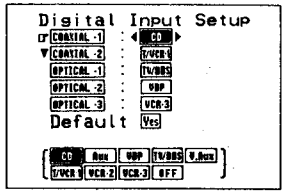

(screen 17)

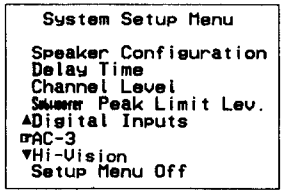

(screen 18)

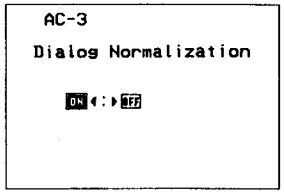

(screen 19)

6-8 Hi-Vision Input Setup

Only use this setup when connecting a TV or DBS with Hi-Vision broadcast compatibility to the Hi-Vision input on the rear panel.

1. Use the CURSOR buttons to specify "Hi-Vision" from the System Setup Menu screen. (Screen 20)

2. Press the ENTER button.

The "Hi-Vision" screen appears. (Screen 21)

3. Use the CURSOR button to select "Hi-Vision".

4. After the above selection are completed, press the ENTER button again.
   - When the above setup is used, the component connected to the Hi-Vision input on the rear panel can be selected automatically as the program source by switching the input to TV/DBS only in the stereo mode.
   - This completes the system setup operations. Once the system is set up, there is no need to make the settings again unless other components or speakers are connected or the speaker layout is changed.

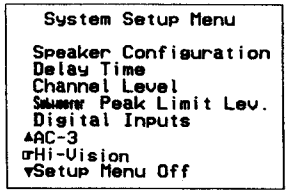

(screen 20)

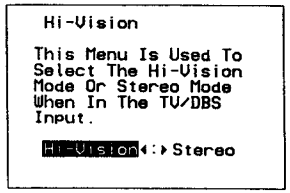

(screen 21)

7 REMOTE CONTROL UNIT

Following the procedure outlined below, insert the batteries before using the remote control unit.

■ Range of operation of the remote control unit

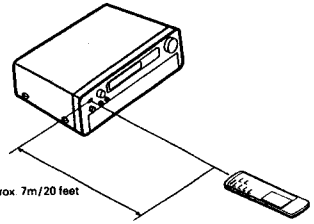

Point the remote control unit at the remote control sensor as shown on the diagram at the left.

NOTES:
- The remote control unit can be used from a straight distance of approximately 7 meters/20 feet, but this distance will shorten or operation will become difficult if there are obstacles between the remote control unit and the remote control sensor, if the remote control sensor is exposed to direct sunlight or other strong light, or if operated from an angle.
- Neon signs or other devices emitting pulse-type noise nearby may result in malfunction, so keep the set as far away from such devices as possible.

■ Inserting the batteries

1. Open the bottom cover of the remote control unit and remove the battery cover.

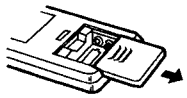

2. Insert the two R6P/AA batteries, matching the ⊕ and ⊖ marks on the batteries with those in the case.
Close the bottom cover until it clicks shut.

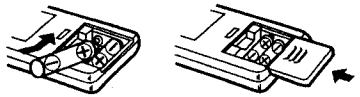

NOTES
- Use only AA, R6P, UM-3 batteries for replacement.
- Be sure the polarities are correct. (See the illustration inside the battery compartment.)
- Remove the batteries if the remote control transmitter will not be used for an extended period of time.
- If batteries leak, dispose of them immediately. Avoid touching the leaked material or letting it come in contact with clothing, etc. Clean the battery compartment thoroughly before installing new batteries.
- Have replacement batteries on hand so that the old batteries can be replaced as quickly as possible when the time comes.
- The codes that have been learned may be lost if removed batteries are not replaced within about 5 minutes.

7-1 System code buttons

DENON remote-controllable audio components can be controlled using this unit's remote control unit. Note that some components, however, cannot be operated with this remote control unit.

1. Set to slide switch to "AUDIO" ("AVP/AVC").

2. Set the slide switch to the position for the component to be operated (CD, DECK or DAT).

3. Use the buttons shown below to operate the component.
For details, refer to the respective component's manual.

a. For CD players and DATs

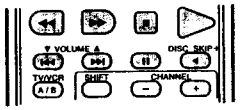

b. For tape decks

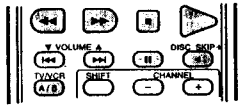

c. For tuners

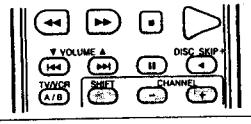

※ The tuner can also be operated with the buttons in block A.

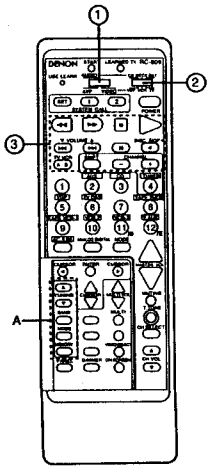

7-2 Preset memory

This remote control unit can be used to operate components of other manufacturers without using the learning function by registering the manufacturer of the component as shown on the diagrams below.

1. Set the slide switch to "VIDEO".

2. Set the slide switch to the component to be registered (VDP, VCR or TV).

Ex.: To preset a VDP in the preset memory
(Keep the POWER button pressed in when performing steps 3 and 4.)

3. Holding in the POWER button, press the button for the corresponding manufacturer in block A.
(Refer to Table 1.)

The LEARNED/TX LED flashes.

4. Next, while holding in the POWER button, press the button for the code in block B. (Refer to Table 1.) The operation is completed when the LEARNED/TX LED lights.

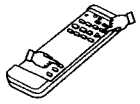

5. To continue registering other components, repeat steps 2 to 4.

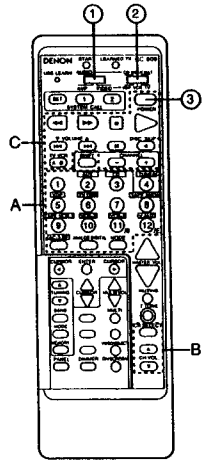

- **Operation after components are registered**

After components are registered, they can be operated using the buttons in block C shown below. For details, refer to the respective component's manual. Before operating the component, set slide switch ② to the position for that component.

1. VDP

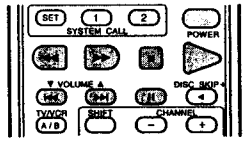

2. VCR

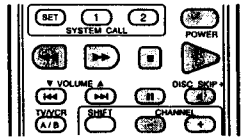

3. TV

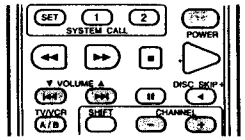

Table 1: Combinations of Personal System Codes for Different Manufacturers

"VDP"

A \ B	CH SELECT	CH VOL. ▲	CH VOL. ▼
1	DENON A	DENON B	DENON C
2(AUX)	—	—	—
3(CD)	MITSUBISHI	—	—
4(TUNER)	PANASONIC	—	—
5(VDP)	—	—	—
6(TV/DBS)	SONY A	SONY B	SONY C
7	PIONEER	—	—
8(TAPE-2MON)	—	—	—
9(TAPE/VCR-1)	SANYO	—	—
10(VCR-2)	SHARP	—	—
11(VCR-3)	—	—	—
12(V.AUX)	PHILIPS	—	—
AC-3RF	RCA	—	—
ANALOG/ DIGITAL	—	—	—
MODE	MAGNAVOX	—	—

"VCR"

A \ B	CH SELECT	CH VOL. ▲	CH VOL. ▼
1	—	—	—
2(AUX)	HITACHI A	HITACHI B	HITACHI C
3(CD)	MITSUBISHI A	MITSUBISHI B	MITSUBISHI C
4(TUNER)	PANASONIC A	PANASONIC B	—
5(VDP)	JVC (VICTOR) A	JVC (VICTOR) B	—
6(TV/DBS)	SONY A	SONY B	SONY C
7	PIONEER	—	—
8(TAPE-2MON)	TOSHIBA A	TOSHIBA B	—
9(TAPE/VCR-1)	SANYO A	SANYO B	—
10(VCR-2)	SHARP A	SHARP B	—
11(VCR-3)	NEC A	NEC B	NEC C
12(V.AUX)	PHILIPS A	PHILIPS B	PHILIPS C
AC-3RF	RCA A	RCA B	—
ANALOG/ DIGITAL	GENERAL ELECTRIC A	GENERAL ELECTRIC B	—
MODE	MAGNAVOX A	MAGNAVOX B	MAGNAVOX C

"TV"

A \ B	CH SELECT	CH VOL. ▲	CH VOL. ▼
1	DENON	—	—
2(AUX)	HITACHI A	HITACHI B	—
3(CD)	MITSUBISHI A	MITSUBISHI B	MITSUBISHI C
4(TUNER)	PANASONIC	—	—
5(VDP)	JVC (VICTOR)	—	—
6(TV/DBS)	SONY	—	—
7	PIONEER	—	—
8(TAPE-2MON)	TOSHIBA	—	—
9(TAPE/VCR-1)	SANYO A	SANYO B	—
10(VCR-2)	SHARP	—	—
11(VCR-3)	NEC A	NEC B	NEC C
12(V.AUX)	PHILIPS A	PHILIPS B	PHILIPS C
AC-3RF	RCA A	RCA B	—
ANALOG/ DIGITAL	GENERAL ELECTRIC A	GENERAL ELECTRIC B	—
MODE	MAGNAVOX A	MAGNAVOX B	MAGNAVOX C

NOTE:
Preset memory function will not work for some models or some codes.
In such case, please use the learning function. (Page 19)

• Clearing the Preset Memory

1. Press the USE/LEARN selector button with the tip of a pen, etc., to set the learn mode.

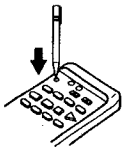

2. Set the slide switch to "VIDEO".

3. Set the program switch to the side to be cleared.

Ex.: To clear the VDP preset memory

4. Press the SYSTEM CALL SET button, and hold it in for at least four seconds.

5. When both the START and LEARNED / TX LEDs light simultaneously, all the stored codes are cleared.

6. Press the USE/LEARN selector button.

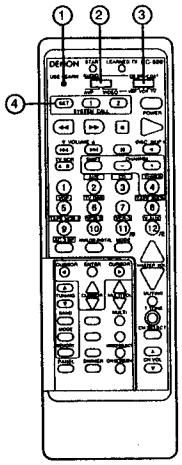

7-3 Remote Control Unit Learning Function

Use the learning function to operate audio components manufactured by companies other than Denon and when your VCR or TV does not operate with the preset memory function.

1. Press the USE/LEARN selector button with the tip of a pen etc., to set the learn mode. Both the START and LEARNED/TX indicators flash.

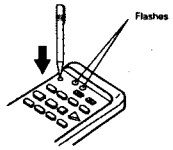

2. Set the program switch to the side to be "learned".
Set to the AUDIO side for the CD, tape deck or DAT position, to the VIDEO side for the CDP, VCR or TV position.

3. Set the program switch to the position to be "learned".

4. Set the remote control units so they are facing each other, then press the button to be "learned" on this unit's remote control unit.

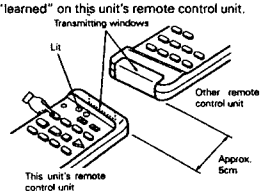

The indicator stops flashing and the START LED lights.
The learnable buttons are the buttons which can be operated with the DENON system codes for the CD player, DAT and tape deck, the buttons which can be operated with the preset memory for the VCR, VDP and TV. For the TV only, however, the buttons in the section indicated "A" on the diagram above can also be "learned". Use these to "learn" TV channels.

5. Check that the START LED is lit, then press the button to be "learned" on the other remote control unit.

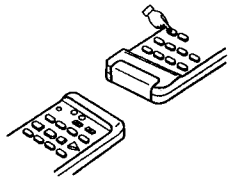

6. Once the START LED turns off and the LEARNED/TX LED lights, release the button on the other remote control unit.

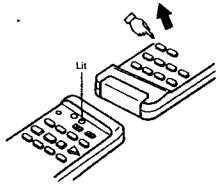

The two LEDs start flashing again.

7. To "learn" other buttons, repeat steps 2 to 6.

8. Once the learning operation is completed, press the USE/LEARN selector button again. The two LEDs stop flashing and the learning mode is cancelled.

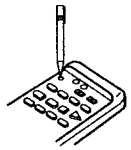

Check that the stored codes work properly.

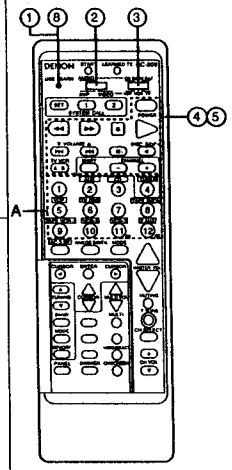

9. For instructions on re-setting the "learned" codes, refer to "clearing the Preset Memory" on page 18.

NOTES:
- Up to 26 codes can be "learned", but this number may be lower if the codes are long.
- If a non-learnable button is pressed or two or more buttons are pressed at once, the two LEDs will once again light when the button(s) is released.
- If the codes could not be stored, the LEARNED/TX LED does not light after the START LED turns off. For limited number of models, codes cannot be stored in RC-809
- If the two LEDs start flashing rapidly after the START LED lights, this means that the memory is already full, and the code you have just attempted to store was not stored.
  To "learn" that code, first perform the resetting operation.

8 OPERATIONS

8-1 Preparations for Play Back

1. Check that all connections are proper.
2. Set to the center position.

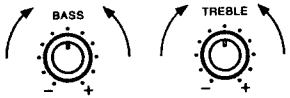

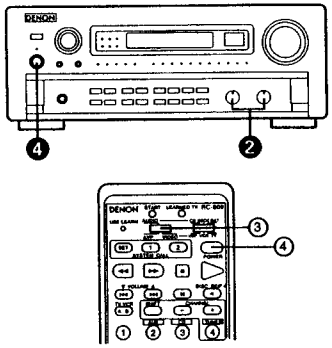

3. Set the remote control unit's slide switch to the AUDIO position.

4. Press the power button to turn the power on.

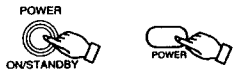

8-2 Playing the Analog program source (Stereo play back)

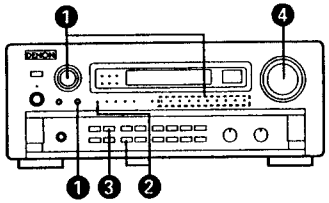

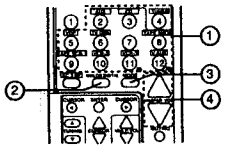

1. Select the source to be played.

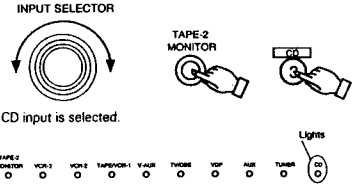

EX: CD input is selected.

2. Select the ANALOG INPUT

If "DIGITAL" indicator is lit, press the "ANALOG/DIGITAL" button.

3. Select the STEREO mode.

4. Adjust the MASTER VOLUME control.

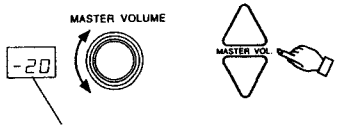

Volume level (−60 ~ 0 ~ 18) is displayed.

8-3 Playing the digital program source.

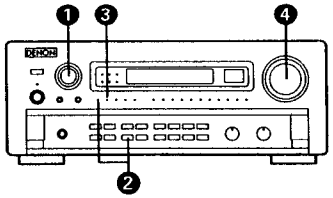

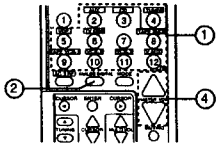

1. Select the program source connected to the digital input terminals you want to play.

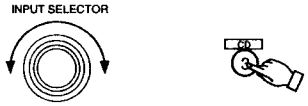

2. Select the digital input.

3. Check that the indicator showing that the digital input's program source can be played is lit.

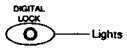

※ If the indicator is not lit, check that the system setup's input setting (refer to page 13, 14) and the connections are proper, that the component's power is turned on, etc.

4. Adjust the MASTER VOLUME control.

NOTE: If a CD-ROM is played, the DIGITAL LOCK LED turns on but no sound is heard.

8-4 Adjusting the TONE control

1. Adjust the BASS and TREBLE.

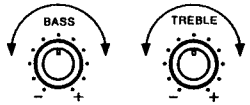

Turn the control clockwise to increase the bass, counterclockwise to decrease it.

2. DIRECT switch
   Use this when you do not want to adjust the sound.

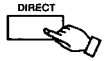

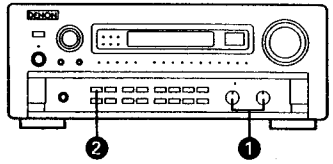

8-5 Simulcast playback

Use this switch to monitor a video source other than the audio source.

1. Press the VIDEO SELECT button repeatedly until the desired source appears on the display.

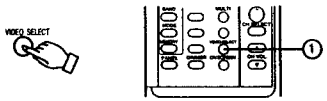

※ Cancelling simulcast playback.
- Select "SOURCE" using the video select button.
- Select the VIDEO & AC-3 RF function.

8-6 Using the muting function

Use this to turn off the audio output temporarily.

1. Press the MUTING button.

※ Cancelling MUTING mode.
Press the MUTING button again.

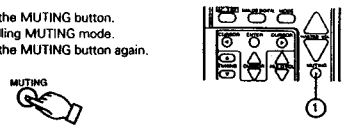

8-7 Listen with headphones

Connect the headphones to the PHONES jack.
The pre-out output is automatically turned off when headphones are connected.

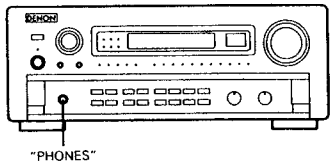

8-8 On-screen display

Each time an operation is performed, a description of that operation appears on the display connected to the unit's VIDEO MONITOR OUT terminal. Also, the unit's operating status can be checked during playback by pressing the remote control unit's ON SCREEN button.
Such information as the position of the input selector and the surround parameter settings is output in sequence.

8-9 Front panel display

Descriptions of the unit's operations are also displayed on the front panel display. In addition, the display can be switched to check the unit's operating status while playing a source by pressing the remote control unit's PANEL button.

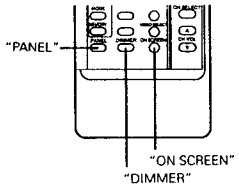

8-10 Using the dimmer function.

Use this to change the brightness of the display. The display brightness changes in four steps (bright, medium, dim and off) by pressing the remote control unit's DIMMER button.

8-11 System call (Remote control unit)

This function allows you to preset frequently used operation patterns in the remote control unit then automatically send a series of up to ten remote control codes with a single button.

Presetting

1. Press the SET button.

2. Press the buttons for the codes to be sent, changing the position of the slide switch as necessary. (Up to ten buttons can be set.)
   Buttons which have been "learned" and buttons which have been preset can also be selected.
3. Press the SYSTEM CALL button ("1" or "2") at which you want to store the codes.
   The setting is now stored.

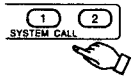

Recalling

4. Press the SYSTEM CALL button ("1" or "2") at which the desired codes have been stored.
   The series of codes is now sent.

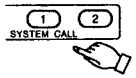

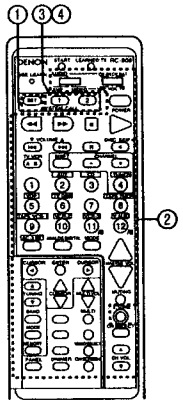

8-12 Multi-Source REC OUT recording / playback

The Multi-Source / REC OUT function allows you to record a source other than the source currently playing or to output its signal to the MULTI SOURCE output terminal.

■ Recording a source other than the one currently playing (REC OUT mode)

1. Press the REC/MULTI MODE button ❶ until "REC OUT SOURCE" appears on the display.

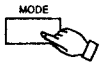

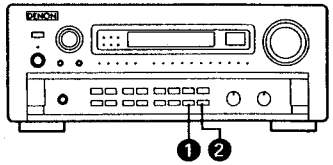

2. Select the source to be output to the recording output terminal.
   Press the REC/MULTI SOURCE button ❷ repeatedly until the desired source appears on the display.

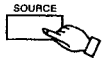

※ The signals of the source expect the digital input selected with the REC OUT mode are also output from the MULTI SOURCE AUDIO/VIDEO OUT terminals.
※ Digital signals are only output from the recording output terminal after conversion into analog signals when playing the digital input in the stereo mode.
※ To cancel the REC OUT mode.
Press the REC/MULTI MODE button or the REC/MULTI SOURCE button repeatedly until "SOURCE" appears on the display.

■ Playing a source other than the one currently playing in a different room (MULTI mode)

1. Press the REC/MULTI MODE ❶ button repeatedly until "M-SOURCE SOURCE" appears on the display.

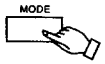

2. Select the source to be output to the MULTI SOURCE output terminal. Press the REC/MULTI SOURCE button ❷ repeatedly until the desired source appears open the display.

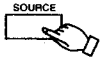

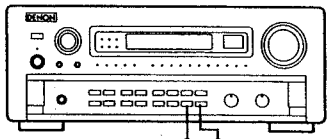

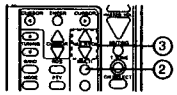

※ When the MULTI button on the remote control unit is pressed, the source to be output from the MULTI SOURCE terminals can be selected.
(This cannot be selected when the main unit is in the REC OUT mode.)
※ The digital signals are not output from the MULTI SOURCE AUDIO/VIDEO OUT terminals.
※ To cancel the MULTI mode
Press the REC/MULTI MODE button or the MULTI button on the remote control unit repeatedly until "SOURCE" appears on the display.

3. The output level of the MULTI SOURCE AUDIO terminal can be controlled using the MULTI VOLUME UP and DOWN buttons ③ on the remote control unit.

NOTE:
The signals of the source selected in the MULTI mode are also output from the TAPE and VCR recording output terminals.

9 USING THE SURROUND FUNCTION

9-1 Dolby Surround & Home THX Cinema Surround

This unit is equipped with digital signal processing sections for decoding and reproducing movie soundtracks the same way as in movie theaters

9-1-1 Dolby Surround

1. **DOLBY SURROUND PRO LOGIC**
   When using conventional video tapes, laser discs, TV programs or CDs with the DOLBY SURROUND mark, Dolby Pro Logic provides extremely natural sound movement and positioning, immersing you in the on-screen action. Pro Logic uses a directional emphasis circuit to decode four output channels (front left and right, center and surround) from the two audio channels provided on the software.

2. **DOLBY SURROUND AC-3**
   When you connect an LD player with an AC-3 RF output and play laser discs with the DOLBY SURROUND AC-3 DIGITAL mark, you can experience improved sound spatiality, positioning, and impact compared with Pro Logic. This is because Dolby AC-3 delivers up to 5 totally discrete, full frequency audio channels (front left and right, center, and surround left and right), plus a bass-only effects channel. Since the signal is digital from the input of the program source until to the output of this unit, a higher quality and clarity of surround sound results.

   Besides laser disc, this unit will also accept future digital formats with Dolby AC-3 such as SD Digital Video Discs and certain digital cable, satellite, and television broadcasts.

9-1-2 HOME THX CINEMA surround

Use the Home THX Cinema mode along with the Dolby Surround processing described above to experience movie sound in your own listening room that matches what you would hear in the best movie theater or movie production studio. Use the Home THX Cinema mode for all movies on disc, tape, or television broadcast. For optimal multichannel sound performance, we recommend the use of THX power amplifiers (such as the DENON POA-T2 and POA-T3) and THX loudspeaker systems.

9-2 Using the Dolby Surround Pro Logic mode

1. Set the Dolby Surround mode.

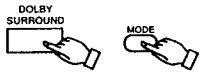

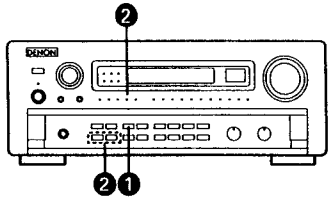

※ Conventional program sources will automatically be decoded with Dolby Pro Logic, while AC-3 program sources will be decoded with Dolby AC-3.

2. If necessary, adjust the input level when analog sources are used to obtain maximum dynamic range without overload.

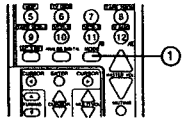

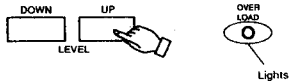

Set so that the indicator does not light at places where the volume is high.

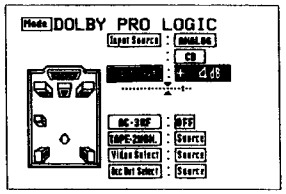

(screen 22)

※ For digital input sources, there is no need to adjust the input level. (These buttons will not operate and the indicator will not light.)
※ The current input source, input level, etc., can be checked on the on-screen display. (screen 22)

3. Play a program source with the DOLBY SURROUND or DOLBY SURROUND AC-3 DIGITAL mark.

9-3 Using the Dolby Surround AC-3 mode

1a. AC-3 RF input
Select the AC-3 RF input program source.

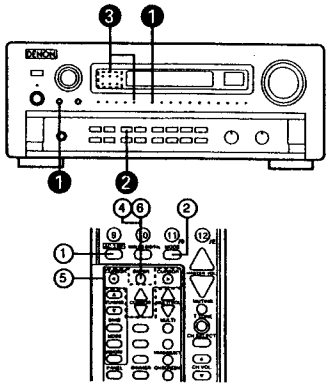

or
1b. Digital input
Select the digital input. Refer to page 21, 8-3, 1, 2 and 3.

2. Set the Dolby Surround mode.

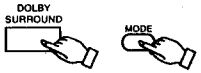

3. Play a program source with the DOLBY SURROUND AC-3 DIGITAL mark or a program source with Dolby AC-3 digital formats.
   The indicators below showing the signals included in the software light. (The number of channels differs according to the software.)

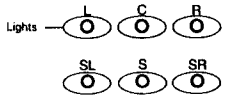

L: Front Left ch
C: Center ch
R: Front Right ch
SL: Surround Left ch
S: Mono Surround ch
SR: Surround Right ch

Also, the following indicator lights if the software contains low frequency effect sounds:

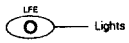

4–1. Adjust the sound for the program source using the on-screen display.

4–2. Press the ENTER button.

4–3. Use the CURSOR buttons to specify "Surround Parameters". (screen 23)

4–4. Press the ENTER button to switch the screen.

5. Use the CURSOR buttons to move the cursor on the screen and set the parameters. (screen 24)

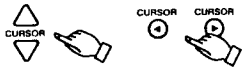

6. After the above settings are completed, press the ENTER button.

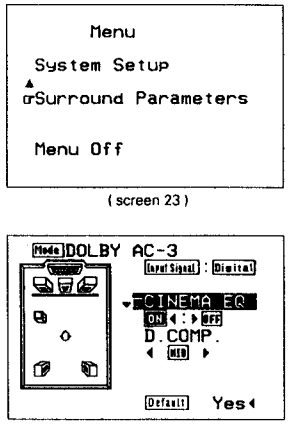

(screen 23)

(screen 24)

- **Surround parameters**

CINEMA ..... Use "CINEMA equalizer" if dialogues sound scratchy when playing movie software. (The higher frequency component is lowered.) (Only effective in the Dolby Pro Logic, Dolby AC–3 and WIDE SCREEN modes.)

D. COMP ..... "Dynamic Range Compression" compresses the dynamic range. This is only effective for Dolby AC–3 program sources. — There are four parameters: "OFF" ↔ "LOW" ↔ "MID" ↔ "HIGH"

NOTE: When "Default" is selected and the ◀ cursor button is pressed, "CINEMA EQ" and "D.COMP" are automatically set to "OFF".

9–4 Using the Home THX Cinema mode with Dolby Surround Pro Logic

1. Set the HOME THX CINEMA mode.

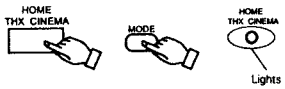

Select the HOME THX CINEMA mode for all movies on disc, tape, or television broadcast. The Home THX Cinema mode is activated simultaneously with either Dolby Surround Pro Logic or Dolby Surround AC–3. The THX processing will allow you to hear the sound as if you were in the best movie theater or movie production studio.

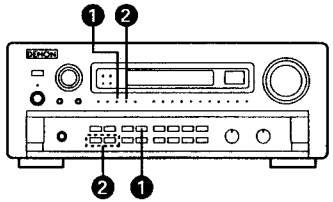

2. If necessary, adjust the input level when analog sources are used to obtain maximum dynamic range without overload. (screen 25)

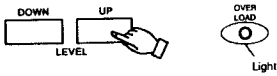

Set so that the indicator does not light at places where the volume is high.

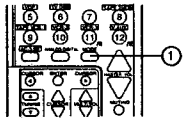

※ For digital input sources, there is no need to adjust the input level. (These buttons will not operate and the indicator will not light.)

※ The current input source, input level, etc., can be checked on the on-screen display.

3. Play a program source with the DOLBY SURROUND or DOLBY SURROUND AC-3 DIGITAL mark.

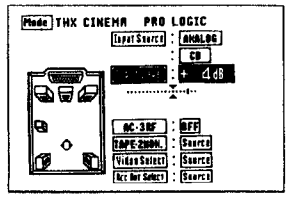

(screen 25)

9–5 Using the Home THX Cinema mode with Dolby Surround AC–3

1a. AC–3 RF input
Select the AC–3 RF input program source.

or

1b. Digital input
Select the digital input. Refer to page 21, 8–3, 1, 2 and 3.

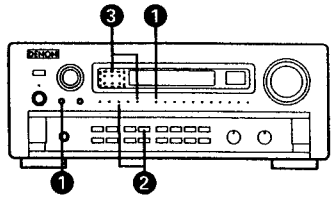

2. Set the Home THX Cinema mode.

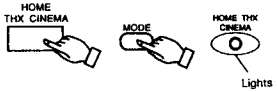

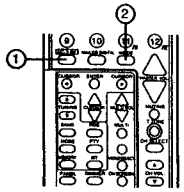

3. Play a program source with the DOLBY SURROUND AC-3 DIGITAL mark or a program source with Dolby AC–3 digital formats.
The indicators below showing the signals included in the software light. (The number of channels differs according to the software.)

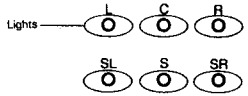

L: Front Left ch
C: Center ch
R: Front Right ch
SL: Surround Left ch
S: Mono Surround ch
SR: Surround Right ch

Also, the following indicator lights if the software contains low frequency effect sounds:

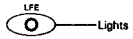

9–6 DSP surround simulation

This unit is equipped with a high precision D.S.P. (Digital Signal Processor) for processing signals digitally to simulate sound fields. Select the surround mode according to the playback source and adjust the parameters according to the conditions in the listening room to achieve a realistic, powerful sound. These surround modes can be used with program sources not recorded in Dolby surround except wide screen mode.

Types of surround modes and their characteristics

1	Wide Screen	Use this to enjoy program sources, with the atmosphere of a movie theater. This mode is suited for program sources recorded in Dolby surround or Dolby AC–3.
2	Mono	Use this when playing monaural signals, for example AM broadcasts or news programs.
3	5ch Stereo	The signals of the left and right channels are distributed to the different speakers to achieve a stereo sound from all directions at the listening position.
4	Super Stadium	Use this to enjoy program sources such as football or baseball games with the atmosphere of a stadium.
5	Rock Arena	The powerful reverberations of this mode produce a sound field which recreates the excitement of live concerts. This mode is effective for rock, popular music, etc.
6	Jazz Club	This mode creates the sound field of a live house with a low ceiling and hard reverberations. The result is that the artist seems to be performing right before your eyes.
7	Classic Concert	This mode creates a sound field simulating a large concert hall, rich in reverberation. This mode is characterized by composed acoustics, and is perfect for playing classical music, etc.
8	Matrix	Use this to enjoy stereo music sources with rich reverberations.

Personal Memory Plus function .... for EASY TO USE

This unit automatically stores the surround mode adding effects for all input sources. The corresponding surround mode is recalled automatically each time an input source is selected.

9-7 Using the DSP surround simulation

1. Select the surround mode according to the input source.

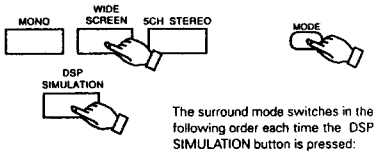

The surround mode switches in the following order each time the DSP SIMULATION button is pressed:

→SUPER STADIUM → ROCK ARENA → ROCK ARENA → CLASSIC CONCERT → MATRIX →

2. Press the ENTER button and call out the "Menu" screen from the on-screen display.

3. Use the CURSOR buttons to specify "Surround Parameters". (screen 26)

4. Press the ENTER button.
The screen switches.

5. Move the cursor on the screen and make the various settings. (screen 27)

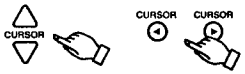

6. After the above settings are completed, press the ENTER button.

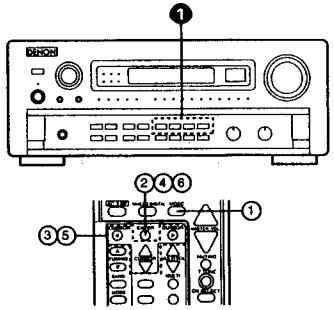

Menu
System Setup
▲
Surround Parameters
▼
Menu Off

(screen 26)

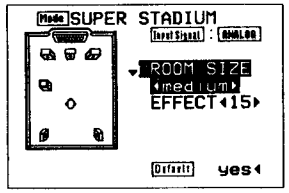

(screen 27)

- **Surround modes and parameters**

CINEMA ..... Use "CINEMA equalizer" if dialogues sound scratchy when playing movie software. (The higher frequency component is lowered.) (Only effective in the Dolby Pro Logic, Dolby AC-3 and WIDE SCREEN modes.)
ROOM SIZE ..... "Room size" refers to the size of the sound field. — There are five parameters: "Small" ↔ "med.S." ↔ "medium" ↔ "med.L." ↔ "large"
EFFECT LEVEL ..... "Effect level" refers to the strength of the effect sounds. If the sound is distorted or seems strange, lower the level. Parameter "1" ~ "15"
DELAY ..... This can be set to between 0 and 360 msec for the MATRIX mode.
D. COMP ..... "Dynamic Range Compression" compresses the dynamic range. This is only effective for Dolby AC-3 program sources. — There are four parameters: "OFF" ↔ "LOW" ↔ "MID" ↔ "HIGH"

NOTE: When "Default" is selected and the ◀ cursor button is pressed, "CINEMA EQ" and "D.COMP" are automatically set to "OFF", "ROOM-SIZE" is set to "medium", "EFFECT LEVEL" is set to "10" and "DELAY TIME" is set to "30 ms".

10 LAST FUNCTION MEMORY

- This unit is equipped with a last function memory which stores the input and output setting conditions as they were immediately before the power is switched off.
  This function eliminates the need to perform complicated resettings when the power is switched on.
- This unit is also equipped with a back-up memory. This function provides approximately one week of memory storage with the power cord disconnected.

11 INITIALIZATION OF THE MICROPROCESSOR

When the indication of the FL display is not normal or when the operation of the unit does not shows the reasonable result, the initialization of the microprocessor is required by the following procedure.

1. Switch off the unit and remove the AC power cord from the wall outlet.
2. Hold the following AC-3 RF button and TAPE-2 MONITOR button, and plug the power cord into the outlet.
3. Check that the entire display is flashing with an interval of about 1 second, and release your fingers from the 2 buttons.
4. Switch on the unit and the microprocessor will be initialized.

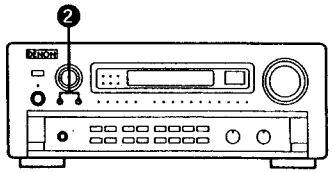

12 TROUBLESHOOTING

If a problem should arise, first check the following:
1. Are the connections correct?
2. Have you operated the amplifier according to the Operating Instructions?
3. Are the speakers, turntable, and other components operating properly?

If this unit is not operating properly, check the items listed in the table below. Should the problem persist, there may be a malfunction. Disconnect the power immediately and contact your store of purchase.

	Symptom	Cause	Measures	Page
During listening to CDs, tapes	DISPLAY does not light and no sound is produced when POWER switch turned on.	• Power cord not plugged in securely.	• Check that power cord is plugged in securely.	5~8
	DISPLAY lights but no sound is produced.	• Incomplete speaker cord connections. • Input selector not set at proper position. • Volume control turned to minimum. • Muting is on. • Digital signals not input Digital input selected.	• Connect securely. • Set to proper position. • Turn up to an appropriate level. • Press remote control unit MUTING button to turn muting off. • Input digital signals or select input jacks to which digital signals are being input.	5~8 20,21 20,21 21 21
	No sound produced from one side.	• Incomplete speaker cord connections. • Incomplete input / output cord connections.	• Connect securely. • Connect securely.	8 5~8
	Position of instruments reversed for stereo mode.	• Left and right speakers or left and right input/output cords connected inversely.	• Check left/right connections.	5~8
Remote control unit	This unit does not operate properly when remote control unit is used.	• Batteries dead. • Remote control unit too far from receiver. • Obstacle between receiver and remote control unit. • Different button is being pressed. • ⊕ and ⊖ ends of battery inserted in reverse.	• Replace with new batteries. • Move closer. • Remove obstacle. • Press the proper button. • Insert batteries properly.	16 16 16 16

13 SPECIFICATIONS

- **Audio section**

(Analog)

Input sensitivity / input impedance:	200 mV/47 kΩ / kohms
Frequency response:	10 Hz ~ 100 kHz: +0, −3 dB (DIRECT mode)
S / N:	105 dB (DIRECT mode)
Distortion:	0.005% (20 Hz ~ 20 kHz) (DIRECT mode)
Rated output / maximum output:	1.2 V/8 V
Maximum headphones output:	284 mW (8 Ω/ohms)

(Digital)

D / A output:	Rated output – 2 V (at 0 dB playback) Total harmonic distortion – 0.005% (1 kHz, at 0 dB) S/N ratio – 102 dB Dynamic range – 96 dB
Digital input:	Format – Digital audio interface

- **Video section**

(Standard video jacks)

Input / output level and impedance:	1 Vp–p, 75 Ω / ohms
Frequency response:	5 Hz ~ 10 MHz +0, −3 dB

(S–video jacks)

Input / output level and impedance:	Y (brightness) signal – 1 Vp–p, 75 Ω/ohms C (color) signal – 0.286 Vp–p, 75 Ω/ohms
Frequency response:	5 Hz ~ 10 MHz +0, −3 dB

- **General**

Power supply:	AC 230 V, 50 Hz
Power consumption:	60 W
Maximum external dimensions:	434 (W) × 167 (H) × 396 (D) mm (17–3/32" × 6–37/64" × 15–19/32")
Weight:	13.5 kg (29 lbs 13 oz)

- **Remote control unit (RC–809)**

Batteries:	R6P/AA Type (two batteries)
External dimensions:	70 (W) × 215 (H) × 19 (D) mm (2–3/4" × 8–15/32" × 3/4")
Weight:	180 g (Approx. 6 oz) (including batteries)

* For purposes of improvement, specifications and design are subject to change without notice.

WIRE ARRANGEMENT

In case of wires require unclasping or loosening to move the location to perform adjustment or part replacement, be sure to rearrange them neatly to restore properly in the same location as they were originally placed, or causing to produce a noise may occasionally occur.

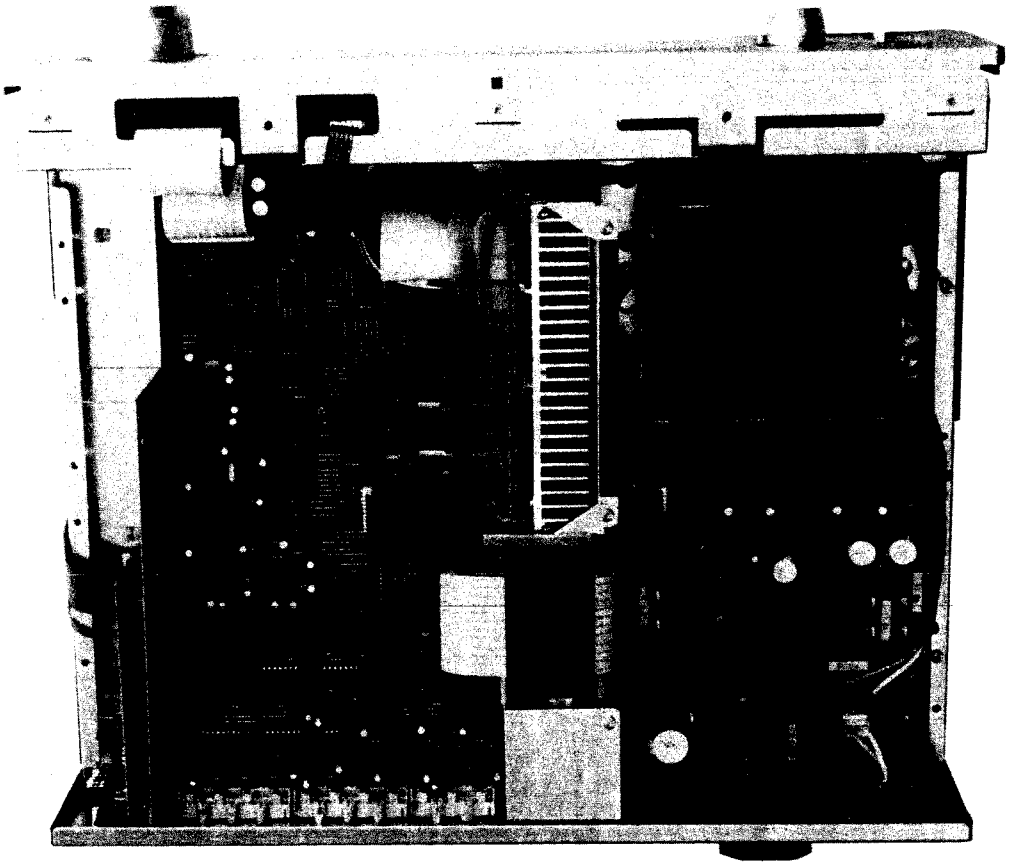

DISASSEMBLY

(To reassemble reverse disassembly)

1. Top Cover and Chassis

1) Remove 8 screws Ⓐ fixing the Top Cover and 2 screws Ⓑ mounting the Rear Panel. Detach the Top Cover as shown in arrow direction.
2) Remove 12 screws Ⓒ and detach the chassis.

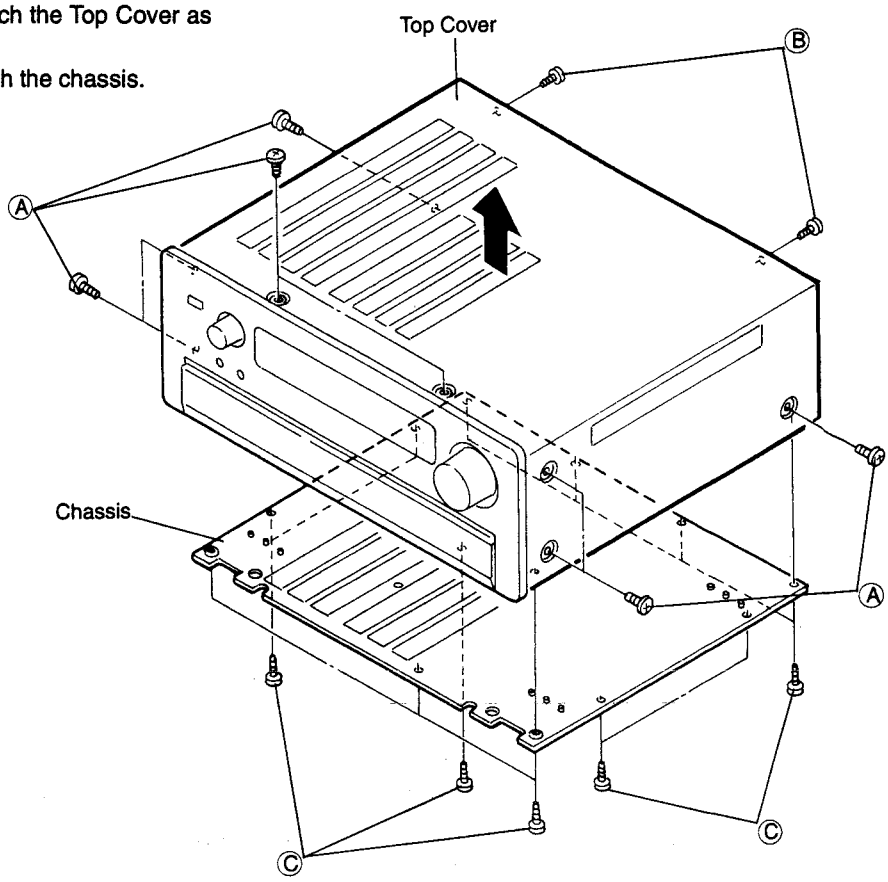

2. Front Panel

1) Remove 3 upper screws Ⓓ and 4 screws Ⓔ , detach the Front Panel as shown in arrow direction.

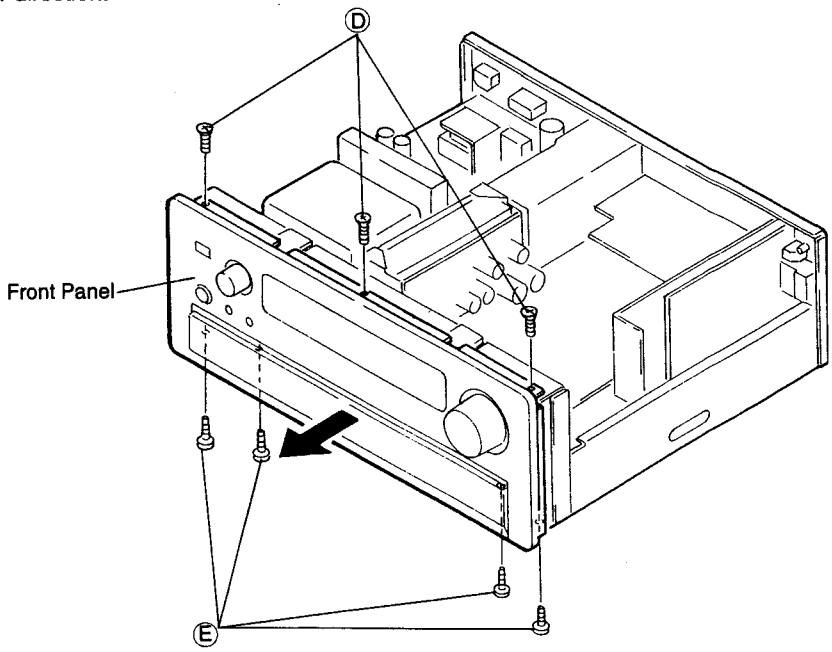

3. Each Upper P.W.Board

1) Remove 11 screws Ⓕ mounting the Rear Panel.
2) Remove 2 screws Ⓖ and detach the Power Supply-2 Unit as shown in arrow direction.
3) Remove 3 screws Ⓗ , and detach the S-Video, Micon Unit as shown in arrow direction.
4) Remove 5 screws Ⓘ fixing the transformer shield and a screw Ⓙ , and detach the Power Supply-1 Unit as shown in arrow direction.
5) Undo a P.W.Board holder Ⓚ fixing the Hi-Vision Unit, then detach the Hi-Vision Unit as shown in arrow direction.

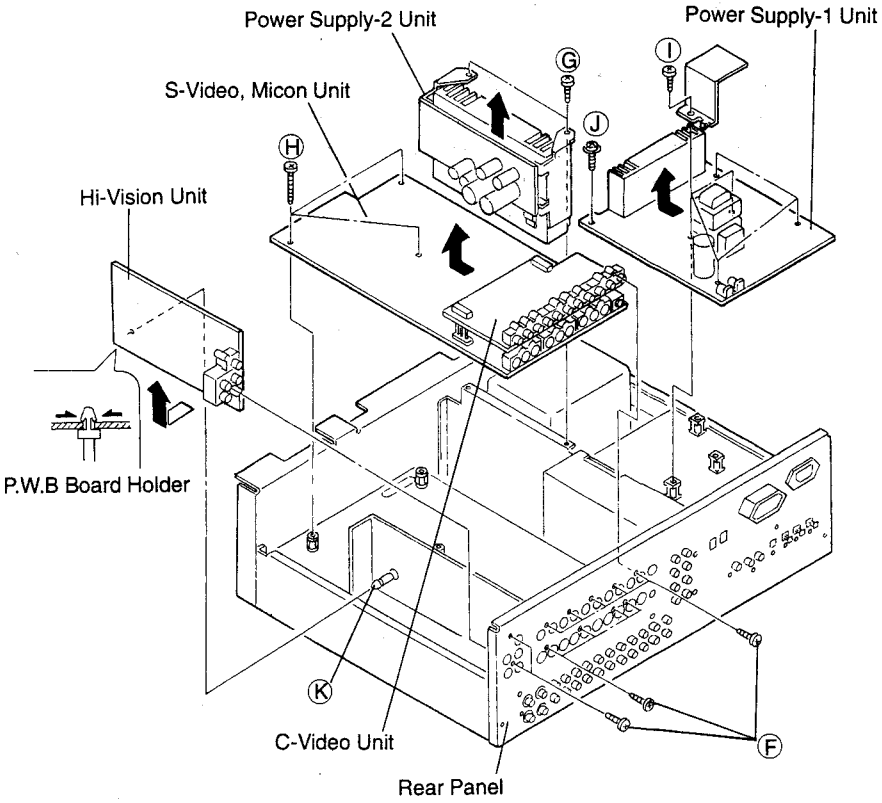

4. Each P.W.Board from Bottom Side

1) Remove 6 screws Ⓛ mounting the Rear Panel.
2) Remove 7 screws Ⓜ and detach the Shield Cover-2 as shown in arrow direction.
3) Remove 4 screws Ⓝ and a screw Ⓝ , and detach the AD/DA Unit as shown in arrow direction.
4) Remove 4 screws Ⓞ , then detach the DSP Unit as shown in arrow direction.
5) Undo a P.W.Board Holder and detach the Headphone Unit.

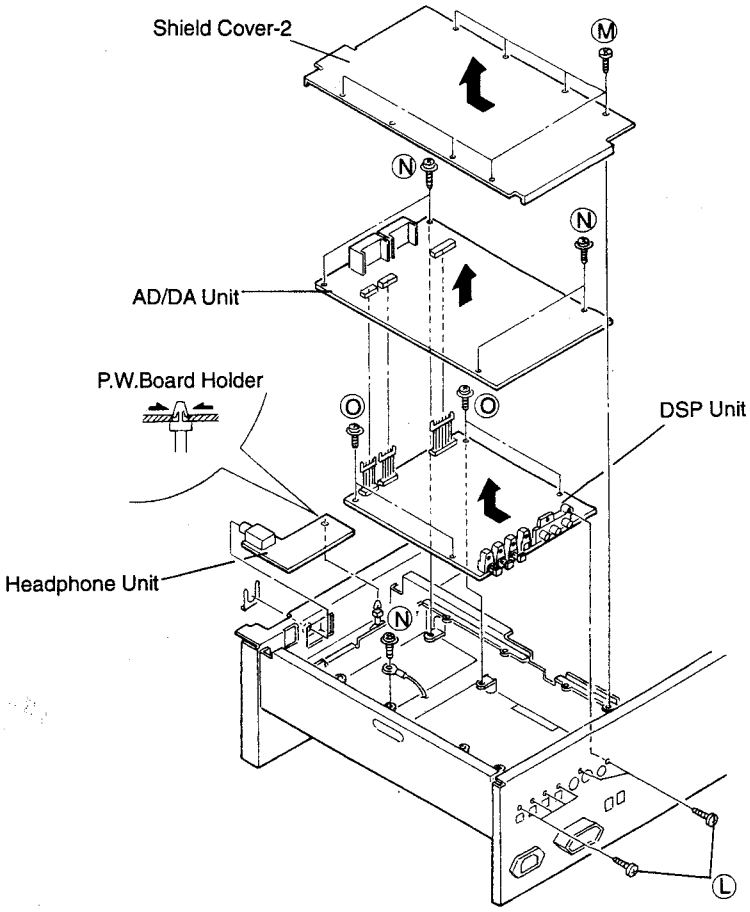

6) Remove 9 screws Ⓟ mounting the Rear Panel.
7) Remove a screw Ⓠ and detach the Shield-pre.
8) Remove 2 Knobs and 2 Nuts, and detach the Tone Unit.
9) Remove 4 screws Ⓡ , then detach the Audio Unit as shown in arrow direction.

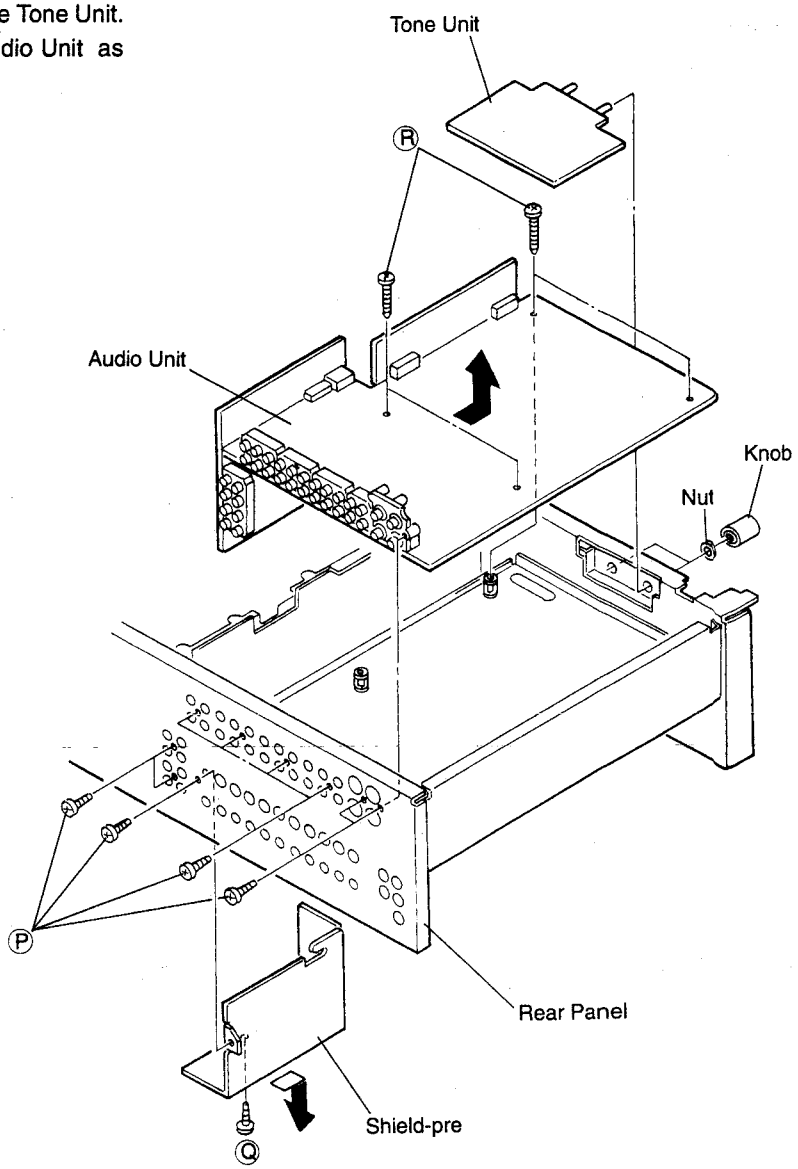

FUNCTION OF NEW CIRCUIT

Circuit Description

DOLBY AC-3

DOLBY AC-3 is a format of new surround signal reproduces maximum 5 channels, i.e. FRONT-LEFT, -RIGHT, CENTER and REAR-LEFT, -RIGHT ;plus exclusive subwoofer signal (0.1ch),totally 5.1 channels from the exclusive digital signal.
Following is the featuring points of AC-3.

(1) Makes surround channel into stereo.
(2) Provides optimum separation due to independent processing of each channel signal.
(AC-3: More than 80dB, PRO LOGIC: Approx.25~40dB)
(3) Resultant surpassed orientation feeling and movement feeling obtained from uniform frequency characteristic.
(AC-3: 20Hz ~20kHz all channels, PRO LOGIC: 20Hz~20kHz FRONT, CENTER channels
20Hz~7kHz SURROUND channels)
(4) With the high- efficient signal compressing technique, one digital cable permits transmission maintaining the above features.

Comparative Diagram of PRO LOGIC and AC-3

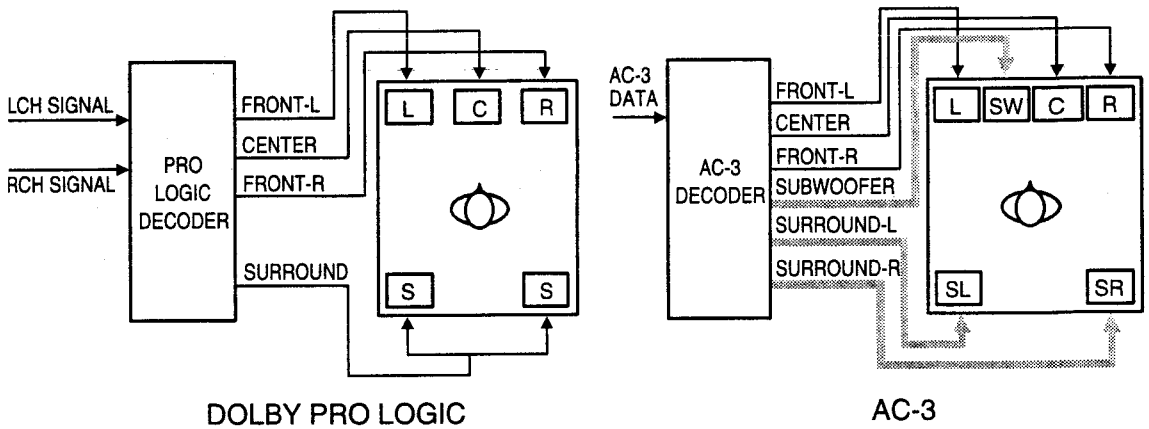

Two kinds of input signals: one corresponds "AC-3RF" signal emitting from LD player; the other is universal optical or coaxial digital format "IEC958" over lapped with "AC-3 exclusive" digital signal. AC-3RF signal is connected via the terminals"AC-3RF OUT" equipped with AC-3 corresponding LD player and "AC-3RF" input of AVP-A1 with a general coaxial digital cable. An applied signal to AVP-A1 goes through demodulator IC(IC26), delivered to DSP(IC1) through input selector (IC14), DIR(IC31) and executed decode processing of AC-3.
The other one is connected in the same way as universal optical or coaxial digital signal. AVP-A1 corresponds with automatic shifting of AC-3 and other signal (PCM) according to input signal.
The signal of each input terminal is delivered to selector (IC14) and applied the same process as to AC-3RF afterward.
AC-3 data and PCM data are transmitted with a common line.

DSP (IC1) performs AC-3 decoding process, DOLBY PRO LOGIC process and PCM digital process and PCM digital process by shifting. Decoded signal to each channel after passed through DSP2 (IC2) is D/A converted and delivered to volume control.

Block Diagram of AC-3, PCM Input Section (1U-2928A-1)

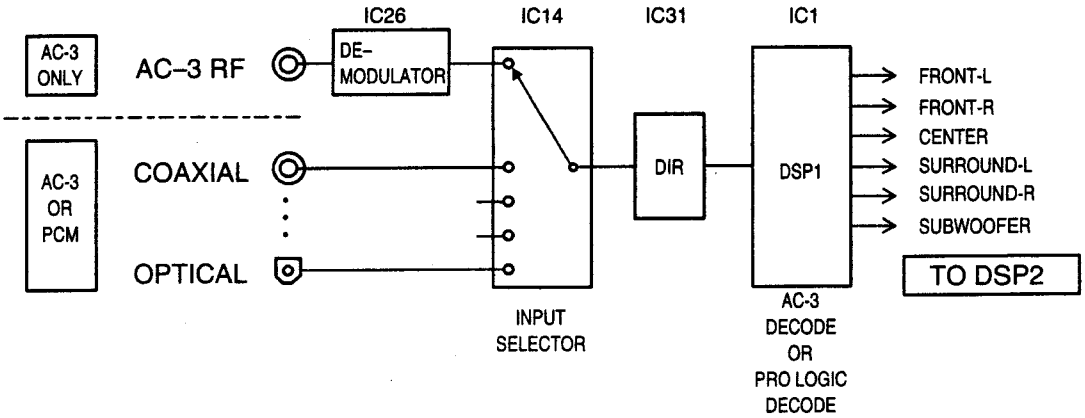

THX

THX is a tone quality improving technique of surround reproduction, to perform signal processing by positively combining either one of AC-3 or DOLBY PRO LOGIC.

THX makes the following additional process to AC-3 and DOLBY PRO LOGIC.

(1) Filtering process based on human auditory sense and sound characteristic of movie theater.

(2) Makes non-inter relation for surround channels.

(3) Non-clipping process for subwoofer channel.

AVP-A1 executes THX process with DSP2(IC2) to AC-3 or PRO LOGIC signal processed by DSP1 (IC1). Every operation mode shifting of surround mode is performed by micro computer. (Refer to Block Diagram)

CONTROL ADVISABILITY OF EACH MODE

	FRONT L LEV.	FRONT R LEV.	CENTER LEVEL	REAR L LEV.	REAR R LEV.	S. WOOFER LEVEL	INPUT LEVEL	ROOM SIZE	EFFECT LEVEL	DELAY TIME	CINEMA	DYNAMIC ON/OFF	TEST TONE
DIRECT	O	O	X	X	X	O*4	X	X	X	X	X	O*7	
STEREO	O	O	X	X	X	O*3	O*6	X	X	X	X	O*7	
MONO	O*5	O*5	O*5	X	X	O*3	O*6	X	X	X	X	O*7	
5ch STEREO	O	O	O*1	O*2	O*2	O*3	O*6	X	X	X	X	O*7	
DOLBY SURROUND	O	O	O*1	O*2	O*2	O*3	O*6	X	X	X	O	O*7	
THX CINEMA	O	O	O*1	O*2	O*2	O*3	O*6	X	X	X	X	X	O*8
WIDE SCREEN	O	O	O*1	O*2	O*2	O*3	O*6	O	O	X	O	O*7	
SUPER STADIUM	O	O	O*1	O*2	O*2	O*3	O*6	O	O	X	X	O*7	
ROCK ARENA	O	O	O*1	O*2	O*2	O*3	O*6	O	O	X	X	O*7	
JAZZ CLUB	O	O	O*1	O*2	O*2	O*3	O*6	O	O	X	X	O*7	
CLASSIC CONCERT	O	O	O*1	O*2	O*2	O*3	O*6	O	O	X	X	O*7	
MATRIX	O	O	O*1	O*2	O*2	O*3	O*6	X	X	O	X	O*7	

O : Feasible to control X : Infeasible to control

O*1 : According to the contents of set up menu, when no center speaker is provided, with no controlling and sets - ∞ data to center electronic volume.

O*2 : According to the contents of set up menu, when no rear speaker is provided, with no controlling and sets - ∞ data to rear electronic volume.

O*3 : According to the contents of set up menu, when no woofer is provided, with no controlling and sets - ∞ data to woofer electronic volume.

O*4 : No controlling when front speaker is set to LARGE.

O*5 : According to the contents of set up menu, when no center speaker is provided, controls front L/R and not to control center.
And, when center speaker is set to SMALL or LARGE, controls center and not to control front L/R.

O*6 : Feasible to control only at analog input. Note that, this function corresponds to each input channel.

O*7 : Feasible to control only at AC-3 input.

O*8 : Feasible to control TEST TONE in all modes of set up menu.

Additional note : Each mode's FRONT/CENTER/REAR L, R/S. WOOFER DELAY should be set according to the setting contents of delay time for set up menu.

DIGITAL/ANALOG, SURROUND MODE IN EACH INPUT FUNCTION AND INITIAL SETTING OF DIGITAL FUNCTION

INPUT FUNCTION	DIGITAL/ANALOG	SURROUND MODE	DIGITAL FUNCTION
CD	ANALOG	STEREO	D1
TUNER	FORCED ANALOG	STEREO	INFEASIBLE TO SET
AUX	ANALOG	STEREO	OFF
VDP	ANALOG	DOLBY SURROUND	D4
TV/DBS	ANALOG	STEREO	D3
V. AUX	ANALOG	STEREO	OFF
T/VCR-1	ANALOG	WIDE SCREEN	D2
VCR-2	ANALOG	STEREO	OFF
VCR-3	ANALOG	STEREO	D5
AC3 RF	FORCED DIGITAL	DOLBY AC-3	AC-3 RF
TAPE2	FORCED ANALOG	STEREO	INFEASIBLE TO SET

INITIAL SETTING OF EACH MODE

	FRONT L LEV.	FRONT R LEV.	CENTER LEVEL	REAR L LEV.	REAR R LEV.	S. WOOFER LEVEL	INPUT LEVEL	ROOM SIZE	EFFECT LEVEL	DELAY TIME	CINEMA	DIALOG ※1	DYNAMIC ※1
DIRECT	0 dB	0 dB	—	—	—	0 dB	—	—	—	—	—	ON	OFF
STEREO	0 dB	0 dB	—	—	—	0 dB	0 dB	—	—	—	—	ON	OFF
MONO	—	—	0 dB	—	—	0 dB	0 dB	—	—	—	—	ON	OFF
5ch STEREO	0 dB	0 dB	0 dB	0 dB	0 dB	0 dB	0 dB	—	—	—	—	ON	OFF
DOLBY SURROUND	0 dB	0 dB	0 dB	0 dB	0 dB	0 dB	0 dB	—	—	—	OFF	ON	OFF
THX CINEMA	0 dB	0 dB	0 dB	0 dB	0 dB	0 dB	0 dB	—	—	—	—	—	—
WIDE SCREEN	0 dB	0 dB	0 dB	0 dB	0 dB	0 dB	0 dB	MED	10	—	OFF	ON	OFF
SUPER STADIUM	0 dB	0 dB	0 dB	0 dB	0 dB	0 dB	0 dB	MED	10	—	—	ON	OFF
ROCK ARENA	0 dB	0 dB	0 dB	0 dB	0 dB	0 dB	0 dB	MED	10	—	—	ON	OFF
JAZZ CLUB	0 dB	0 dB	0 dB	0 dB	0 dB	0 dB	0 dB	MED	10	—	—	ON	OFF
CLASSIC CONCERT	0 dB	0 dB	0 dB	0 dB	0 dB	0 dB	0 dB	MED	10	—	—	ON	OFF
MATRIX	0 dB	0 dB	0 dB	0 dB	0 dB	0 dB	0 dB	—	—	30m sec	—	ON	OFF

— : No setting

※1 : Conditions in case for setting AC-3 data to ZR38500.

SEMICONDUCTORS

• IC's

Note: Indications before IC numbers denote P.W.B. name.

- **AU** : Audio P.W.B. Unit
- **VI** : Video P.W.B. Unit
- **PO** : Power Supply P.W.B. Unit
- **DI** : Display P.W.B. Unit
- **DG** : Digital P.W.B. Unit
- **DS** : DSP P.W.B. Unit

TMP87CS71F-** (VI: IC901)**
TMP87CP71F ** (VI: IC902)**

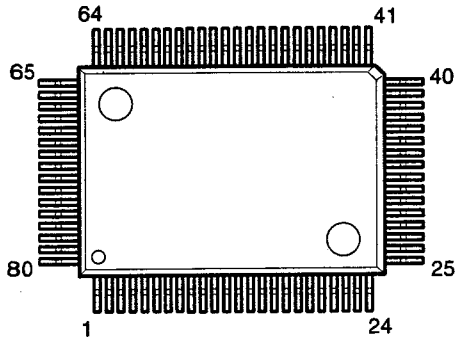

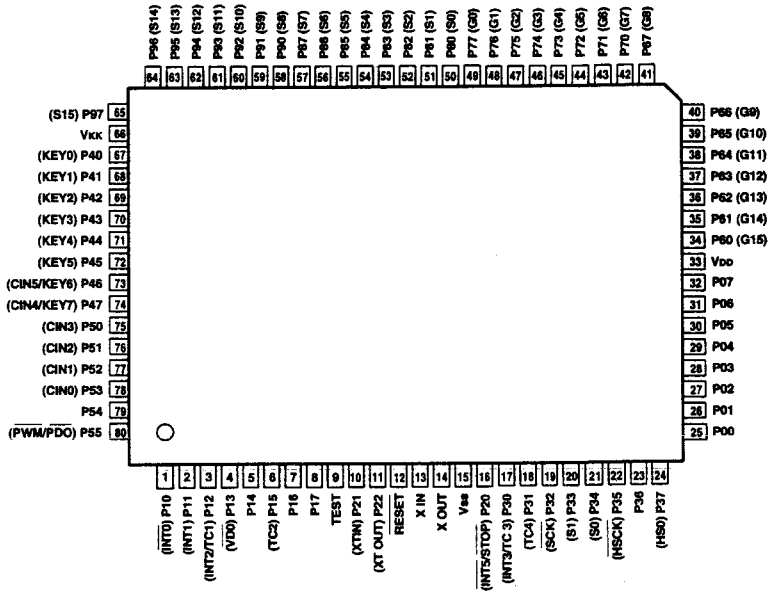

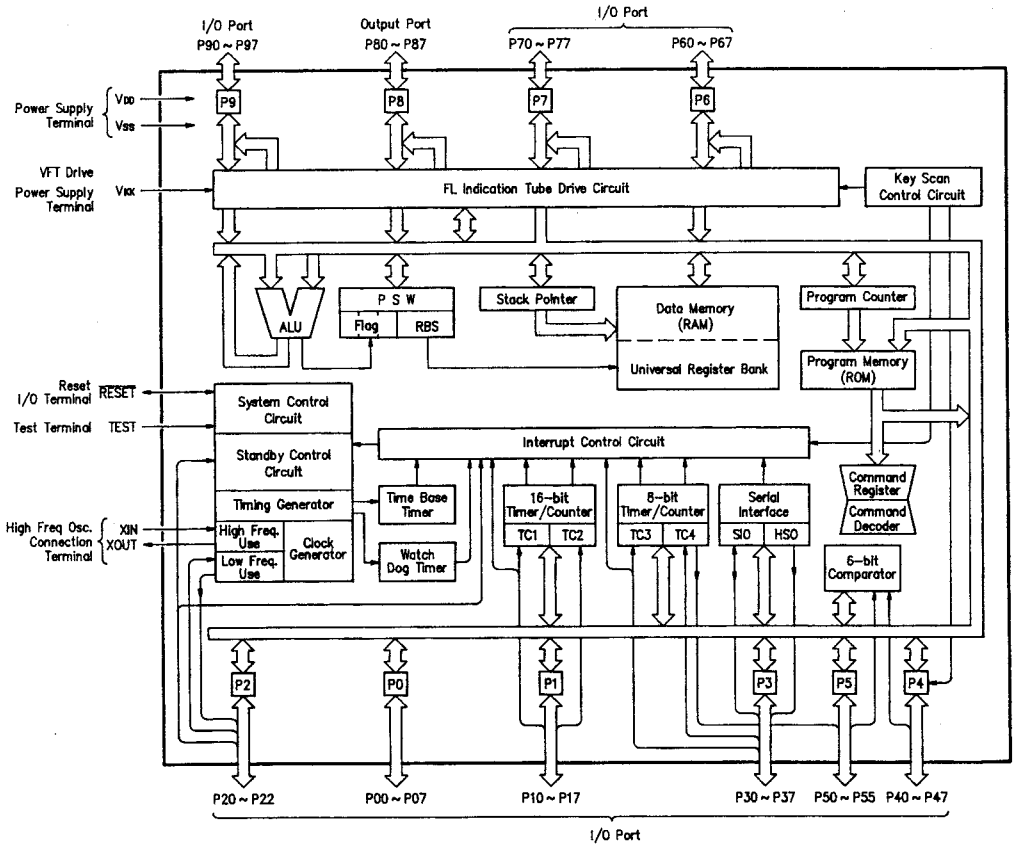

TMP87CS71F-**** (IC901) Terminal Function

Pin No.	Port Name	Symbol	I/O	Type	Op	Det	Res	Ini	Function
1	P10/INT 0	NC	O	C	—	—	Z	L	No connection.
2	P11/INT 1	DSP CLK IN	I	—	Eu	S	Z	H	DSP control terminal (ZR38500).
3	P12/INT 2	SO/ZR	I	—	Eu	S	Z	—	DSP control input terminal (ZR38500).
4	P13/DVO	NC	O	C	—	—	Z	L	No connection.
5	P14	NC	O	C	—	—	Z	L	No connection.
6	P15/TC2	NC	O	C	—	—	Z	L	No connection.
7	P16	NC	O	C	—	—	Z	L	No connection.
8	P17	NC	O	C	—	—	Z	L	No connection.
9	TEST	TEST	I	—	GND	—	—	—	Connect to ground.
10	P21/XTIN	NC	O	N	—	—	Z	L	No connection.
11	P22/XTO	SCL	O	N	Eu	—	Z	H	MAIN-SUB microcomputer communication control terminal.
12	$\overline{\text{RESET}}$	$\overline{\text{RESET}}$	I	—	Eu	Lv	L	—	Reset input.
13	XIN		I	—	—	—	—	—	Oscillator circuit terminal (4MHz).
14	XOUT		O	—	—	—	—	—	Oscillator circuit terminal (4MHz).
15	VSS	GND	I	—	GND	—	—	—	Ground.
16	P20/INT 5	POWER OFF	I	—	Eu	Lv	Z	—	Power OFF detection signal (L: Power OFF).
17	P30/INT 3	REMOCON	I	—	Eu	E&L	Z	—	Remote control signal input.
18	P31/TC4	SDA	O	N	Eu	—	Z	H	MAIN-SUB microcomputer communication control terminal.
19	P32/SCK	NC	O	N	—	—	Z	L	No connection.
20	P33/SI	NC	O	N	—	—	Z	L	No connection.
21	P34/S0	NC	O	N	—	—	Z	L	No connection.
22	P35/HSCK	OSD CLK	O	N	Eu	S	Z	H	OSD control output (M35015).
23	P36	OSD CS	O	N	Eu	—	Z	H	OSD control output (M35015).
24	P37/HSO	OSD DATA	O	N	Eu	S	Z	L	OSD control output (M35015).
25	P00	OSD RES	O	C	—	—	Z	H	OSD control output (M35015).
26	P01	FL RES	O	C	—	—	Z	L	Fluorescent display control output (MSC1937).
27	P02	FL DATA	O	C	—	S	Z	H	Fluorescent display control output (MSC1937).
28	P03	FL CLK	O	C	—	S	Z	H	Fluorescent display control output (MSC1937).
29	P04	LED CK	O	C	—	S	Z	H	LED control terminal (M66313).
30	P05	LED DATA	O	C	—	S	Z	H	LED control terminal (M66313).
31	P06	LED LE	O	C	—	—	Z	H	LED control terminal (M66313).
32	P07	LED OE	O	C	—	—	Z	H	LED control terminal (M66313).
33	VDD	VDD	I	—	—	—	—	—	Connect to +5V power supply.
34	P60	VOL MUTE	O	P	Id	—	L	L	Control signal at minus infinite of electronic volume (H: Infinite).
35	P61	E. VOL CE3	O	P	Id	—	L	L	Electronic volume control output (LC7536).
36	P62	E. VOL CE2	O	P	Id	—	L	L	Electronic volume control output (LC7536).
37	P63	E. VOL CE1	O	P	Id	—	L	L	Electronic volume control output (LC7536).
38	P64	E. VOL DATA	O	P	Id	—	L	H	Electronic volume control output (LC7536).
39	P65	E. VOL CK	O	P	Id	—	L	H	Electronic volume control output (LC7536).
40	P66	IN VOL ST	O	P	Id	—	L	L	Electronic volume control output (TC9299).
41	P67	A/D RES	O	P	Id	—	L	L	A/D control terminal (L: Analog input at reset).
42	P70	SEL	O	P	Id	—	L	H	DIR cotrol terminal (CS8412).
43	P71	SELCK	O	P	Id	—	L	H	DIR cotrol terminal (CS8412) (H: Digital, L: Analog).
44	P72	DSF1	O	P	Id	—	L	H	Digital filter control terminal.
45	P73	DSF2	O	P	Id	—	L	L	Digital filter control terminal.
46	P74	AC-3	O	P	Id	—	L	H	Digital MUTE control terminal (L: AC-3).
47	P75	M SYNC (NC)	I	—	—	—	L	—	No connection.
48	P76	M STOP OUT	O	P	Id	—	L	H	No connection.
49	P77	NC	O	P	Id	—	L	L	No connection.
50	P80	STANDBY LED	O	P	Id	—	L	H	Standby indication LED drive output (H: Lighting).
51	P81	FRONT	O	P	Id	—	L	H	Front Pre-out relay control output (L: Mute).
52	P82	CENTER	O	P	Id	—	L	L	Center Pre-out relay control output (L: Mute).
53	P83	REAR	O	P	Id	—	L	L	Rear Pre-out relay control output (L: Mute).
54	P84	MULTI	O	P	Id	—	L	H	MULTI Pre-out relay control output (L: Mute).
55	P85	SUBWOOFER	O	P	Id	—	L	H	MONO Pre-out relay control output (L: Mute).
56	P86	H/P	O	P	Id	—	L	H	H/P Pre-out relay control output (L: Mute).
57	P87	POWER	O	P	Id	—	L	H	Power supply relay control output (H: ON).
58	P90	OVL	I	—	—	—	L	—	Over load detection input (H: Over load).
59	P91	NC	I	—	Id	—	L	L	No connection.
60	P92	F0	I	—	—	—	L	—	DIR control input terminal (CS8412).
61	P93	F1	I	—	—	—	L	—	DIR control input terminal (CS8412).
62	P94	F2	I	—	—	—	L	—	DIR control input terminal (CS8412).
63	P95	CSI	I	—	—	—	L	—	DIR control input terminal (CS8412) (H: PCM).
64	P96	ERR	I	—	—	—	L	—	DIR control input terminal (CS8412) (H:ERR).
65	P97	VERF (NC)	I	—	—	—	L	—	No connection.
66	VKK	VKK	I	—	—	—	—	—	Connect to ground.
67	P40/KEY0	S-MONITOR DET.	I	—	Eu	Lv	Z	—	Judgement whether S monitor is connected or not (L: Connecting).
68	P41/KEY1	S-SIGNAL DET.	I	—	Eu	Lv	Z	—	S signal input control (H: S signal input).
69	P42/KEY2	OSD SYNC DET.	I	—	Eu	Lv	Z	—	OSD sync switching signal (H: External sync).
70	P43/KEY3	MVOL SELA	I	—	Eu	Lv	Z	H	Master volume setting input (Rotary encode).
71	P44/KEY4	MVOL SELB	I	—	Eu	Lv	Z	H	Master volume setting input (Rotary encode).
72	P45/KEY5	H/P DET	I	—	Eu	Lv	Z	L	H/P input detection signal (H: Detecting).
73	P46/CIN5	NC	O	N	—	—	Z	L	No connection.
74	P47/CIN4	MODE	I	—	Eu	Lv	Z	—	Destination mode switching input.
75	P50/CIN3	KEY4	I	—	Eu	Lv	Z	H	Key input 4.
76	P51/CIN2	KEY3	I	—	Eu	Lv	Z	H	Key input 3.
77	P52/CIN1	KEY2	I	—	Eu	Lv	Z	H	Key input 2.
78	P53/CIN0	KEY1	I	—	Eu	Lv	Z	H	Key input 1.
79	P54	FUNC SELA	I	—	Eu	Lv	Z	L	Function switching input (Rotary encoder).
80	P55/PMW	FUNC SELB	I	—	Eu	Lv	Z	H	Function switching input (Rotary encoder).

NOTES:

Pin No. : Terminal number of microcomputer.
Port Name : The name entered in the data sheet of microcomputer.
Symbol : Symbolized interface function.
I/O : Input or output of part.
"I" = Input port
"O" = Output port
Type : Composition of port in case of output port.
"C" = CMOS output
"N" = NMOS open drain output
"P" = PMOS open drain output.
Op : Pull up/Pull down selection information.
"Iu" = Inner microcomputer pull up
"Id" = Inner microcomputer pull down
"Eu"= External microcomputer pull up
"Ed"= External microcomputer pull down
Det : Indicates judging state of input port. Level detection is "LV"; Edge detection is "Ed"; Detection by both shifting is "E&L"; Serial data detection is "S" (Serial data output is also "S").
Res : State at reset.
"H" = Outputs High Level at reset
"L" = Outputs Low Level at reset
"Z" = Becomes High Impedance mode at reset.
Ini : Initial output state.
Function : Function and logical level explanation of signals to be interface.

TMP87CP71F-**** (IC902) Terminal Function

Pin No.	Port Name	Symbol	I/O	Type	Op	Det	Res	Ini	Function
1	P10/INT 0	DEMOD RES	O	C	—	—	Z	H	Demodulator reset control terminal (L: Reset).
2	P11/INT 1	DEMOD POWER	O	C	—	—	Z	L	Demodulator power ON/OFF control terminal (H: ON).
3	P12/INT 2	A/D POWER	O	C	—	—	Z	H	A/D converter power ON/OFF control terminal (H: ON).
4	P13/DVO	LCR GAIN	O	C	—	—	Z	L	D/A output gain control terminal.
5	P14		I	—	—	—	Z	L	No connection.
6	P15/TC2		I	—	—	—	Z	L	No connection.
7	P16	TONE	O	C	—	—	Z	L	Tone control terminal (H: Direct).
8	P17	CD DIRECT	O	C	—	—	Z	H	CD direct control terminal (H: Function CD ON, Direct ON).
9	TEST		I	—	GND	—	—	—	Connect to ground.
10	P21/XTIN	M STOP IN	I	—	—	—	Z	H	No connection.
11	P22/XTO	NC	I	—	—	—	Z	L	No connection.
12	RESET		I	—	Eu	Lv	L	—	Reset input.
13	XIN		I	—	—	—	—	—	Oscillator circuit terminal (4MHz).
14	XOUT		O	—	—	—	—	—	Oscillator circuit terminal (4MHz).
15	VSS		I	—	GND	—	—	—	Ground.
16	P20/INT 5	POWER OFF	I	—	Eu	Lv	Z	—	Power OFF detection signal (L: Power OFF).
17	P30/INT 3	DSP CLK IN	I	—	Eu	S	Z	L	Not used (DSP control terminal (DSP56004)).
18	P31/TC4	SO/MOT	I	—	Eu	S	Z	L	Not used (DSP control terminal (DSP56004)).
19	P32/SCK	SCL	I	—	Eu	S	Z	—	MAIN-SUB microcomputer communication control terminal.
20	P33/SI	SDA	I	—	Eu	S	Z	—	MAIN-SUB microcomputer communication control terminal.
21	P34/S0	NC	I	—	—	—	Z	L	No connection.
22	P35/HSCK	DSP CK	O	N	Eu	S	Z	H	DSP control input terminal (DSP56004).
23	P36	Z SS	O	N	Eu	—	Z	H	DSP control terminal (ZR38500).
24	P37/HSO	DSP DATA	O	N	Eu	S	Z	H	DSP control terminal (ZR38500, DSP56004).
25	P00	M SS	O	C	—	—	Z	H	DSP control terminal (DSP56004).
26	P01	DSP RES (Z)	O	C	—	—	Z	H	DSP control terminal (ZR38500), (L: Reset).
27	P02	DSP RES (M)	O	C	—	—	Z	H	DSP control terminal (DSP56004), (L: Reset).
28	P03	FUNC ST3	O	C	—	—	Z	L	Function control output (NJU7313AL).
29	P04	FUNC ST2	O	C	—	—	Z	L	Function control output (TC9274N) REC OUT.
30	P05	FUNC ST1	O	C	—	—	Z	L	Function control output (TC9274N) INPUT.
31	P06	FUNC DATA	O	C	—	S	Z	L	Function control output (TC9274N, NJU7313AL).
32	P07	FUNC CK	O	C	—	S	Z	L	Function control output (TC9274N, NJU7313AL).
33	VDD		I	—	—	—	—	—	Connect to +5V power supply.
34	P60	VIN A	O	P	Id	—	L	L	Video input control (TC4051).
35	P61	VIN B	O	P	Id	—	L	L	Video input control (TC4051).
36	P62	VIN C	O	P	Id	—	L	L	Video input control (TC4051).
37	P63	VREC A	O	P	Id	—	L	L	Video output control (TC4051).
38	P64	VREC B	O	P	Id	—	L	L	Video output control (TC4051).
39	P65	VREC C	O	P	Id	—	L	L	Video output control (TC4051).
40	P66	VINH1	O	P	Id	—	L	L	Video output inhibit control (HD14066).
41	P67	VINH2	O	P	Id	—	L	L	Video output inhibit control (HD14066).
42	P70	VINH3	O	P	Id	—	L	L	Video output inhibit control (HD14066).
43	P71	$\overline{S1}$	O	P	Id	—	L	—	Video signal switching control output.
44	P72	S1	O	P	Id	—	L	—	Video signal switching control output.
45	P73	S2	O	P	Id	—	L	—	Video signal switching control output.
46	P74	NC	I	—	Id	—	L	L	No connection.
47	P75	G2	O	P	Id	—	L	—	LED display digit control signal.
48	P76	G1	O	P	Id	—	L	—	LED display digit control signal.
49	P77	G0	O	P	Id	—	L	—	LED display digit control signal.
50	P80	S (a)	O	P	Id	—	L	—	LED display segment control signal.
51	P81	S (b)	O	P	Id	—	L	—	LED display segment control signal.
52	P82	S (c)	O	P	Id	—	L	—	LED display segment control signal.
53	P83	S (d)	O	P	Id	—	L	—	LED display segment control signal.
54	P84	S (e)	O	P	Id	—	L	—	LED display segment control signal.
55	P85	S (f)	O	P	Id	—	L	—	LED display segment control signal.
56	P86	S (g)	O	P	Id	—	L	—	LED display segment control signal.
57	P87	S (h)	O	P	Id	—	L	—	LED display segment control signal.
58	P90	NC	I	—	Id	—	L	L	No connection.
59	P91	DSP POWER	O	P	Id	—	L	H	DSP power supply control output (H: ON).
60	P92	IN A	O	P	Id	—	L	L	Digital input/output control terminal (TC74HC151).
61	P93	IN B	O	P	Id	—	L	L	Digital input/output control terminal (TC74HC151).
62	P94	IN C	O	P	Id	—	L	L	Digital input/output control terminal (TC74HC151).
63	P95	REC A	O	P	Id	—	L	L	Digital input/output control terminal (TC74HC151).
64	P96	REC B	O	P	Id	—	L	L	Digital input/output control terminal (TC74HC151).
65	P97	REC C	O	P	Id	—	L	L	Digital input/output control terminal (TC74HC151).
66	VKK		I	—	—	—	—	—	Connect to ground.
67	P40/KEY0	NC	I	—	—	—	Z	L	No connection.
68	P41/KEY1	NC	I	—	—	—	Z	L	No connection.
69	P42/KEY2	NC	I	—	—	—	Z	L	No connection.
70	P43/KEY3	NC	I	—	—	—	Z	L	No connection.
71	P44/KEY4	NC	I	—	—	—	Z	L	No connection.
72	P45/KEY5	NC	I	—	—	—	Z	L	No connection.
73	P46/CIN5	NC	I	—	—	—	Z	L	No connection.
74	P47/CIN4	NC	I	—	—	—	Z	L	No connection.
75	P50/CIN3	NC	I	—	—	—	Z	L	No connection.
76	P51/CIN2	NC	I	—	—	—	Z	L	No connection.
77	P52/CIN1	NC	I	—	—	—	Z	L	No connection.
78	P53/CIN0	NC	I	—	—	—	Z	L	No connection.
79	P54	NC	I	—	—	—	Z	L	No connection.
80	P55/PMW	NC	I	—	—	—	Z	L	No connection.

NOTES:

Pin No. : Terminal number of microcomputer.
Port Name : The name entered in the data sheet of microcomputer.
Symbol : Symbolized interface function.
I/O : Input or output of part.
"I" = Input port
"O" = Output port
Type : Composition of port in case of output port.
"C" = CMOS output
"N" = NMOS open drain output
"P" = PMOS open drain output.
Op : Pull up/Pull down selection information.
"Iu" = Inner microcomputer pull up
"Id" = Inner microcomputer pull down
"Eu"= External microcomputer pull up
"Ed"= External microcomputer pull down
Det : Indicates judging state of input port. Level detection is "LV"; Edge detection is "Ed"; Detection by both shifting is "E&L"; Serial data detection is "S" (Serial data output is also "S").
Res : State at reset.
"H" = Outputs High Level at reset
"L" = Outputs Low Level at reset
"Z" = Becomes High Impedance mode at reset.
Ini : Initial output state.
Function : Function and logical level explanation of signals to be interface.

TC55329AJ-35
(DS: IC028, 034, 035)

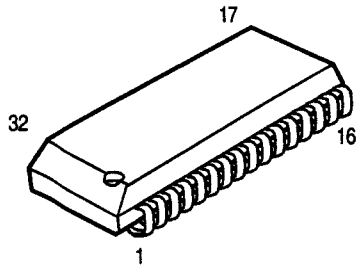

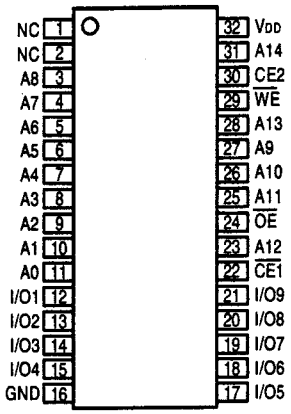

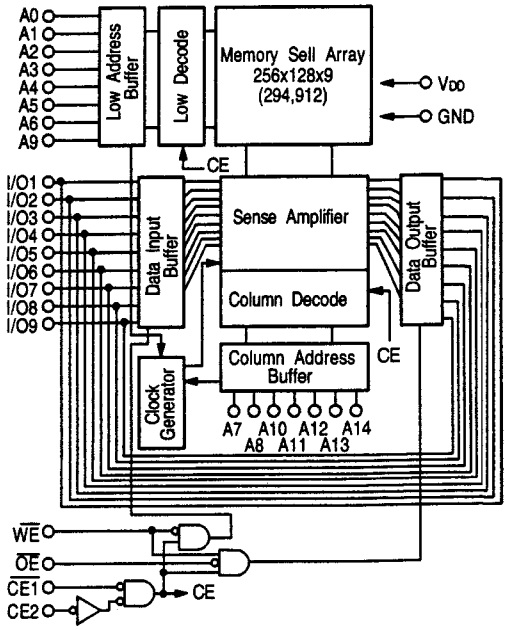

TC55329 AJ-35 Terminal Function

Pin No.	Symbol	I/O	Function
1	N.C.	—	No connection.
2	N.C.	—	No connection.
3	A8	I	Address 8 input.
4	A7	I	Address 7 input.
5	A6	I	Address 6 input.
6	A5	I	Address 5 input.
7	A4	I	Address 4 input.
8	A3	I	Address 3 input.
9	A2	I	Address 2 input.
10	A1	I	Address 1 input.
11	A0	I	Address 0 input.
12	I/O1	I/O	Data input/output.
13	I/O2	I/O	Data input/output.
14	I/O3	I/O	Data input/output.
15	I/O4	I/O	Data input/output.
16	GND	—	Ground.
17	I/O5	I/O	Data input/output.
18	I/O6	I/O	Data input/output.
19	I/O7	I/O	Data input/output.
20	I/O8	I/O	Data input/output.
21	I/O9	I/O	Data input/output.
22	$\overline{CE1}$	I	Chip enable input.
23	A12	I	Address 12 input.
24	$\overline{OE}$	I	Output buffer control input signal.
25	A11	I	Address 11 input.
26	A10	I	Address 10 input.
27	A9	I	Address 9 input.
28	A13	I	Address 13 input.
29	$\overline{WE}$	I	Write enable input.
30	CE2	I	Chip enable input.
31	A14	I	Address 14 input.
32	VDD	—	+5V power supply.

CS8412CS
(DS: IC031)

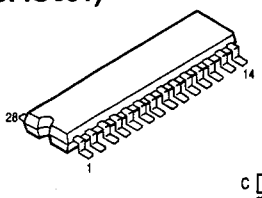

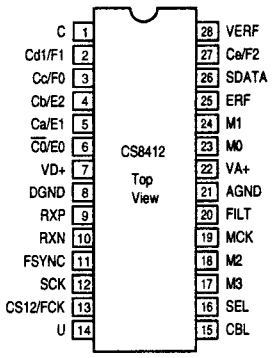

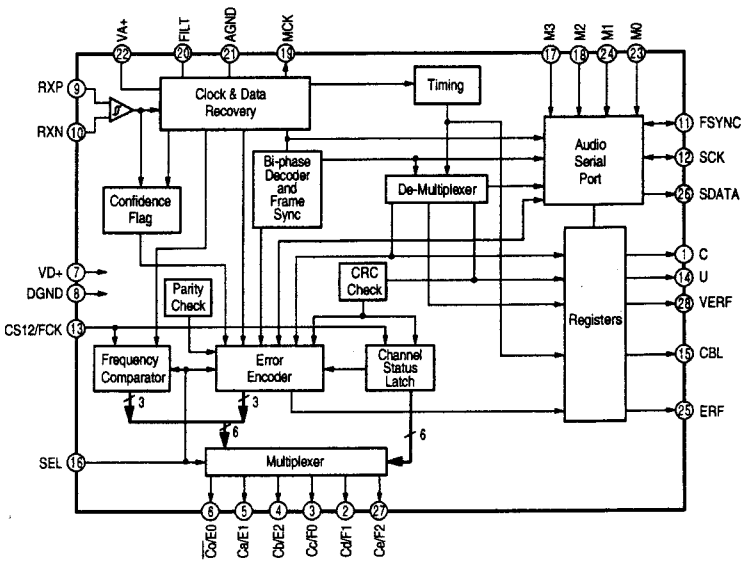

CS8412CS Terminal Function

Pin No.	Symbol	I/O	Function
1	C	I	C.S. bit input.
2	Cd F1	O	C.S. bit output/Frequency indication (H: C.S. bit output, L: Frequency indication). CO="0" in C.S. bit is for professional use, and CO="1" is for general use.
3	Cc F0		
4	Cb E2	O	C.S. bit output/Error indication (H: C.S. bit output, L: Error indication). CO="0" in C.S. bit is for professional use, and CO="1" is for general use.
5	Ca E1		
6	C0/E0		
7	VD+	—	Digital +5V power supply.
8	DGND	—	Connect to digital ground.
9	RXN	I	Differential line receiver signal. Compatible with RS422.
10	RXP		
11	FSYNC	I/O	Frame sync signal.
12	SCK	I/O	Serial clock signal, 32 clock is included with each audio sample in output status.
13	CS12/FCK	I	Channel selection/Reference frequency (H: Channel selection, L: Reference frequency). CS12 selects the channel output to C.S terminal. "0" is for sub frame 1, and "1" is for sub frame 2. Input frequency can be detected by 6.144MHz clock input to FCK.
14	U	I	User (U) bit terminal.
15	CBL	O	C.S. block output terminal.
16	SEL	I	C.S. $\overline{\text{F2-F0}}$, E2-E0 selection signal (H: C.S. bit output, L: Frequency/Error indication).
17	M3	I	Serial port mode select signal.
18	M2		
19	MCK	I	Master clock signal (Low jitter clock output with 256 times of receiving frequency).
20	FILT	I	Filter terminal, connect resistor 1kohm and capacitor 0.047 μF between this terminal and AGND.
21	AGND	—	Connect to analog ground.
22	VA+	—	Analog +5V power supply (Noise for this power supply should be minimized as lower as possible since it affects jitter's performance of playback clock directly).
23	M0	I	Serial port mode select signal.
24	M1		
25	ERF	O	Error flag aignal.
26	SDATA	O	Serial data signal.
27	Ce F2	O	C.S. bit output/Frequency indication (H: C.S. bit output, L: Frequency indication). CO="0" in C.S. bit is for professional use, and CO="1" is for general use.
28	VERF	O	Parity and Error flag signal.

MSC1937-03RS
(DI : IC102)

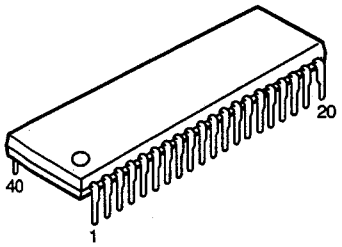

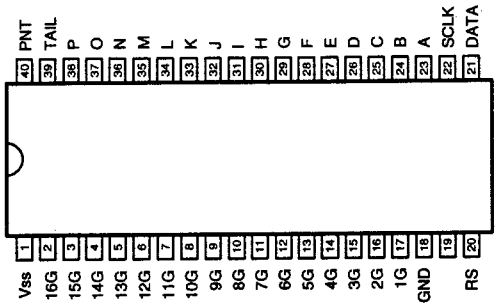

MSC1937-03RS Terminal Function

Pin No.	Symbol	I/O	Function
1	Vss	—	Power supply (+5V).
2	16G	O	Digit 16 output.
3	15G	O	Digit 15 output.
4	14G	O	Digit 14 output.
5	13G	O	Digit 13 output.
6	12G	O	Digit 12 output.
7	11G	O	Digit 11 output.
8	10G	O	Digit 10 output.
9	9G	O	Digit 9 output.
10	8G	O	Digit 8 output.
11	7G	O	Digit 7 output.
12	6G	O	Digit 6 output.
13	5G	O	Digit 5 output.
14	4G	O	Digit 4 output.
15	3G	O	Digit 3 output.
16	2G	O	Digit 2 output.
17	1G	O	Digit 1 output.
18	GND	—	Ground.
19	NC	—	No connection.
20	RS	I	POWER-ON-RESET. (H : RESET)
21	DATA	I	Data input.
22	SCLK	I	Shift clock input.
23	A	O	Segment A output.
24	B	O	Segment B output.
25	C	O	Segment C output.
26	D	O	Segment D output.
27	E	O	Segment E output.
28	F	O	Segment F output.
29	G	O	Segment G output.
30	H	O	Segment H output.
31	I	O	Segment I output.
32	J	O	Segment J output.
33	K	O	Segment K output.
34	L	O	Segment L output.
35	M	O	Segment M output.
36	N	O	Segment N output.
37	O	O	Segment O output.
38	P	O	Segment P output.
39	TAIL	—	No connection.
40	PNT	O	Point output.

LC7536
(AU: IC415, 416, 431, 432)
(PO: IC424)

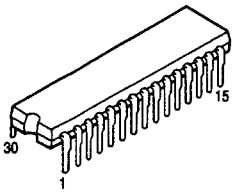

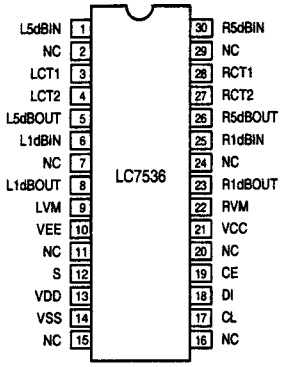

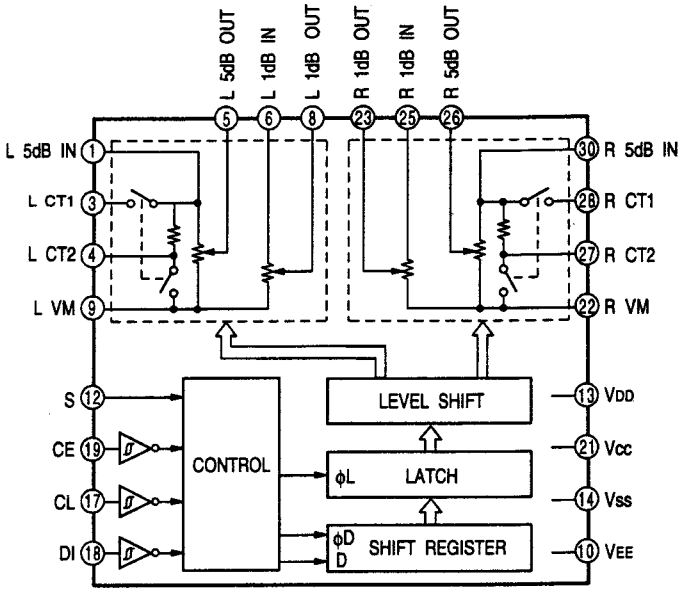

LC7536 Terminal Function

Pin No.	Symbol	I/O	Function
1	L 5dBIN	I	Input terminal for 5dB step attenuator, it should be driven with low impedance path.
2	NC	—	No connection.
3	L CT1	I	For loudness control, connect a capacitor between CT1 and 5dBIN with high frequency compensation, and also connect a capacitor between CT2 and Vm with low frequency compensation.
4	L CT2		
5	L 5dBOUT	O	Output terminal for 5dB step attenuator with approx. 1Mohm load impedance.
6	L 1dBIN	I	Input terminal for 1dB step attenuator, it should be driven with low impedance.
7	NC	—	No connection.
8	L 1dBOUT	O	Output terminal for 1dB step attenuator with approx. 47kohm~1Mohm load impedance.
9	L VM		Common terminal for volume control.
10	VEE	I	Connect to power supply.
11	NC	—	No connection.
12	S		Selection terminal for address code during data format.
13	VDD	I	Connect to power supply (Pay attention to the rising time so that Vcc does not rise up faster than VDD when the power turns).
14	Vss	I	Connect to power supply.
15	NC	—	No connection.
16	NC	—	No connection.
17	CL	I	Input terminal for controlling LC7536 serial data with 0~5V amplitude.
18	DI		
19	CE		
20	NC	—	No connection.
21	Vcc	I	Connect to power supply (Pay attention to the rising time so that Vcc does not rise up faster than VDD when the power turns).
22	R VM		Common terminal for volume control.
23	R 1dBOUT	O	Output terminal for 1dB step attenuator with approx. 47kohm~1Mohm load impedance.
24	NC	—	No connection.
25	R 1dBIN	I	Input terminal for 1dB step attenuator, it should be driven with low impedance.
26	R 5dBOUT	O	Output terminal for 5dB step attenuator with approx. 1Mohm load impedance.
27	R CT2		For loudness control, connect a capacitor between CT1 and 5dBIN with high frequency compensation, and also connect a capacitor between CT2 and Vm with low frequency compensation.
28	R CT1		
29	NC	—	No connection.
30	R 5dBIN	I	Input terminal for 5dB step attenuator, it should be driven with low impedance path.

PCM1760P-L
(DG: IC171)

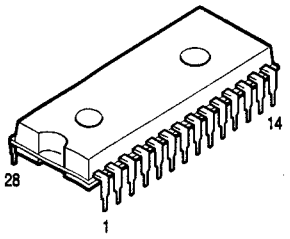

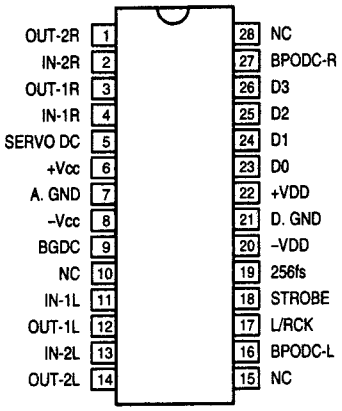

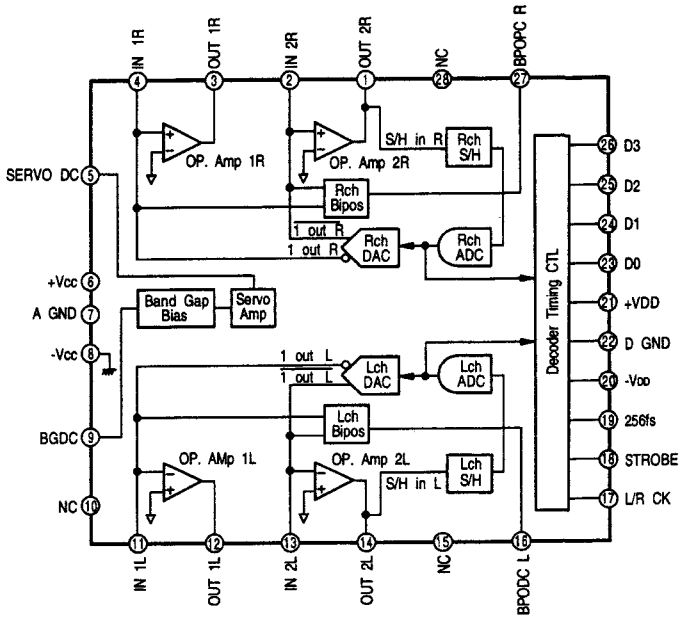

PCM1760P-L Terminal Function

Pin No.	I/O	Symbol	Function	Pin No.	I/O	Symbol	Function
1	O	OUT-2R	Rch Amp.-2R output.	15		NC	No connection.
2	I	IN-2R	Rch Amp.-2R input.	16	—	BPODC-L	Lch bipolar offset decoupling terminal.
3	O	OUT-1R	Rch Amp.-1R output.	17	O	L/R CK	L/R clock output (64fs).
4	I	IN-1R	Rch Amp.-1R input.	18	O	STROBE	Data strobe output (128fs).
5	—	SERVO DC	Servo decoupling terminal.	19	I	256fs	System clock input (256fs).
6	—	+Vcc	Analog +5V power supply.	20	—	-VDD	Digital -5V power supply.
7	—	A. GND	Analog ground.	21	—	D. GND	Digital ground.
8	—	-Vcc	Analog -5V power supply.	22	—	+VDD	Digital +5V power supply.
9	—	BGDC	Band gap decoupling terminal.	23	O	D0	Data output (LSB side).
10	—	NC	No connection.	24	O	D1	Data output.
11	I	IN-1L	Lch Amp-1L input.	25	O	D2	Data output.
12	O	OUT-1L	Lch Amp-1L output.	26	O	D3	Data output (MSB side).
13	I	IN-2L	Lch Amp-2L input.	27	—	BPODC-R	Rch bipolar offset decoupling terminal.
14	O	OUT-2L	Lch Amp-2L output.	28	—	NC	No connection.

PCM69AP
(DG:IC214)

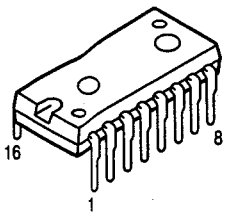

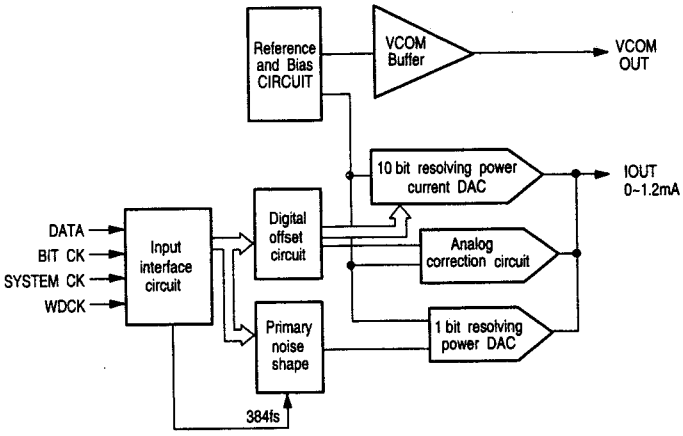

PCM69AP Terminal Function

Pin No.	Function
1	+Vcc(Analog power supply)
2	Vcom. Lch
3	Lout. Lch
4	Servo. DC
5	REF. DC
6	Lout. Rch
7	Vcom. Rch
8	A-GND (Analog common)
9	D-GND (Digital common)
10	DATA Rch
11	BCK
12	SYS CLK
13	WDCK
14	DATA Lch
15	TP1
16	+VDD(Digital power supply)

M35015-XXXSP (VI: IC814)

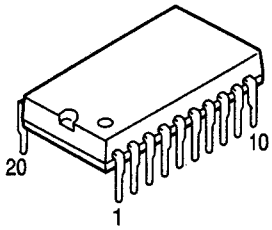

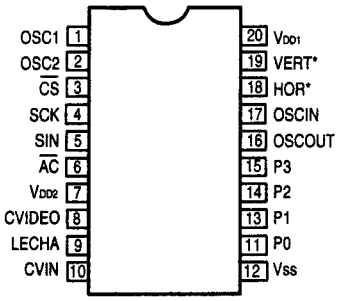

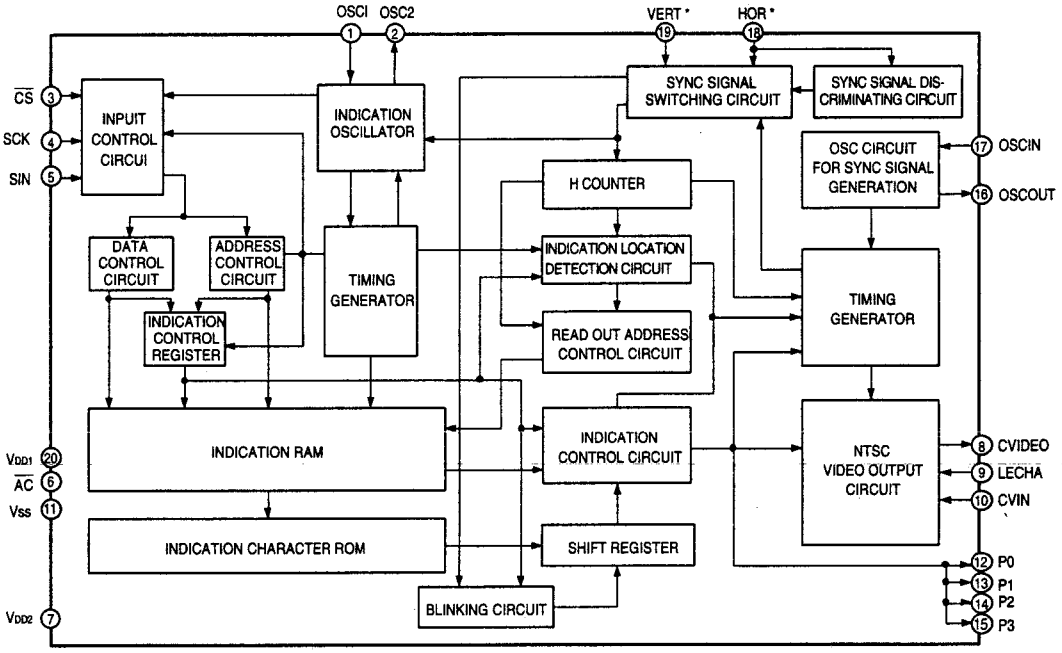

M35015-XXXSP Terminal Function

Pin No.	Symbol	Name	I/O	Function
1	OSC1	Osc. circuit ext. terminal.	I	External terminal for indication oscillator circuit. Standard OSC. freq. is approx. 7MHz. With this OSC. freq., decides horizontal indication locatin and character width.
2	OSC2		O	
3	$\overline{CS}$	Chip select input	I	Chip select terminal and turns to "L" when transfer serial data. Hysteresis input. Pull up resistor is built-in.
4	SCK	Serial clock input	I	Takes in serial data of SIN at SCK rise when $\overline{CS}$ terminal is in "L". Hysteresis input. Pull up rersist is built-in.
5	SIN	Serial data Input	I	Serial input of register for indication control and data, and address for indication data memoly. hysteresis input. Pull up resistor is built-in.
6	$\overline{AC}$	Auto-clear input	I	Resets internal circuit of IC at "L" mode. Hysteresi input,Pull up resistor is built-in.
7	V_{DD2}	Power supply	—	Power supply terminal of analog system. Connect to +5V.
8	CVIDEO	Combined video output	O	Output terminal of combined video signal. Outputs 2Vp-p combined video signal. Character output, etc. Overlap CVIN signal and outputs at superimpose.
9	LECHA	Character level input	I	Input terminal deciding character output level in combined video signal. color of character is white.
10	CVIN	Combined video input	I	Input terminal of external combined video signal. Character output etc. overlap this external combined video signal.
11	Vss	Ground	—	Ground terminal. Connect to GND.
12	P0	Output port P0	O	General output or character background signal BL NK1* output is switchable. Polarity can be selected at ROM mask.
13	P1	Output port P1	O	General output or character background signal CO1* output is switchable. Polarity can be selected at ROM mask.
14	P2	Output port P2	O	General output or character background signal BLNK2* output is switchable. Polarity can be selected at ROM mask.

Pin No.	Symbol	Name	I/O	Function
15	P3	Output port P3	O	General output or character background signal CO2* output is switchable. Polarity can be selected at ROM mask.
16	OSCOUT	Ext. terminal for sync sig. OSC. Circuit	O	Terminal for external use of sync signal OSC. circuit. Use the freq.: 14.32MHz at NTSC system, 17.73MHz at PAL. system, 14.30MHz at MPAL system.
17	OSCIN		I	
18	HOR*	Horizontal sync signal	I	Inputs horizontal sync signal. Hysteresis input.
19	VERT*	Vertical Sync signal	I	Inputs vertical sync signal. Hysteresis input. Polarity can be selected at ROM mask.
20	V_{DD1}	Power supply	—	Power supply terminal of digital system. Connect to +5V.

TC514256BZL-60 (DS: IC007, 008)

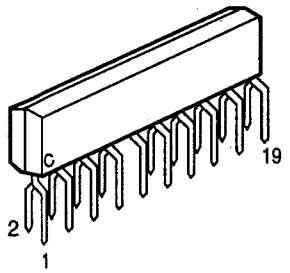

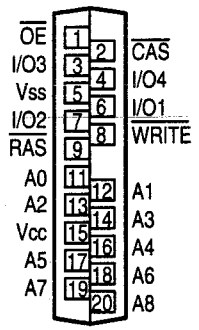

TC514256 BZL-60 Terminal Function

Pin No.	Symbol	Function
1	$\overline{OE}$	Ouput enable signal.
2	$\overline{CAS}$	Column address strobe signal.
3	I/O3	Data input/output.
4	I/O4	Data input/output.
5	Vss	Ground.
6	I/O1	Data input/output.
7	I/O2	Data input/output.
8	$\overline{WRITE}$	Read/write input.
9	$\overline{RAS}$	Low address strobe signal.
10	N.C.	No connection.
11	A0	Address input.
12	A1	Address input.
13	A2	Address input.
14	A3	Address input.
15	Vcc	+5V power supply.
16	A4	Address input.
17	A5	Address input.
18	A6	Address input.
19	A7	Address input.
20	A8	Address input.

NJU7313AL (DI: IC404)

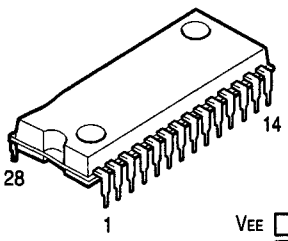

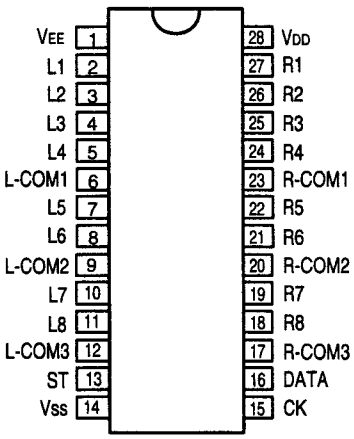

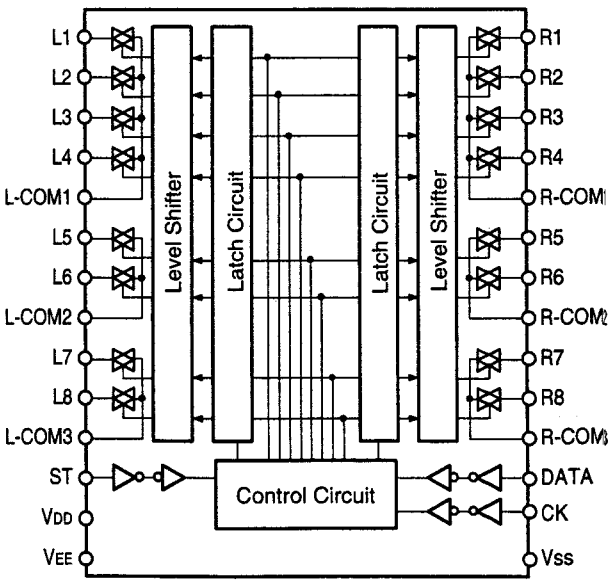

DF1760P
(DG: IC172)

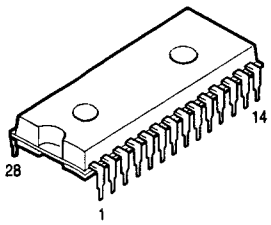

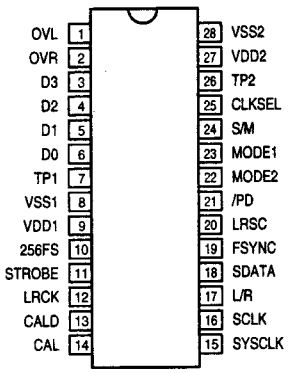

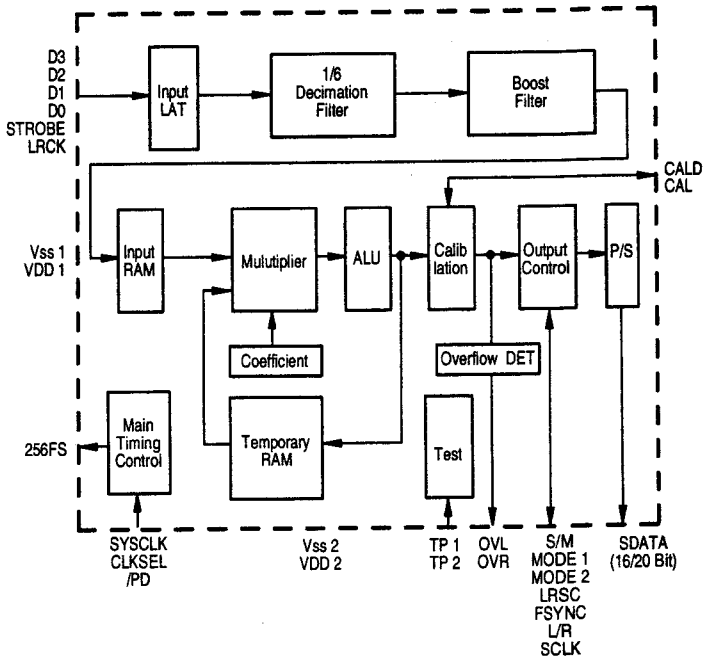

DF1760P Terminal Function

Pin No.	Symbol	I/O	Function
1	OVL	O	Lch overflow detection (H: Detection).
2	OVR	O	Rch overflow detection (H: Detection).
3	D3	I	Data input (MSB side).
4	D2	I	Data input.
5	D1	I	Data input.
6	D0	I	Data input (LSB side).
7	TP1	—	Test terminal (No connection).
8	VSS1	—	Ground for modulator.
9	VDD1	—	+5V power supply for modulator.
10	256fs	O	System clock output (256fs).
11	STROBE	I	Data strobe input (128fs).
12	LRCK	I	L/R clock input.
13	CALD	I	Calibration selecting (L: Effective).
14	CAL	O	Calibration input (H: During Execution).
15	SYSCLK	I	System clock input (256fs/384fs).
16	SCLK	I/O	Data clock (32fs-64fs).
17	L/R	I/O	L/R channel dividing clock signal.
18	SDATA	O	Serial data input.
19	FSYNC	I/O	Frame sync clock signal (2fs).
20	LRSC	I	L/R logical switching.
21	/PD	I	Power down mode (L: Power down).
22	MODE2	I	Output data model selection.
23	MODE1	I	Output data model selection.
24	S/M	I	Slave/Master mode selection (H: Slave).
25	CLKSEL	I	System clock selection (H: 256fs).
26	TP2	—	Test terminal (No connection).
27	VDD2	—	Digital power supply (+5V).
28	VSS2	—	Digital ground.

ZR38500(DS:IC001)

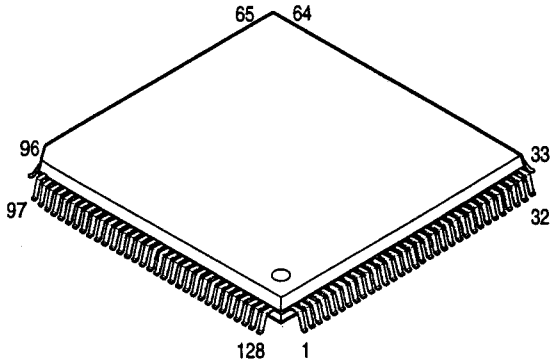

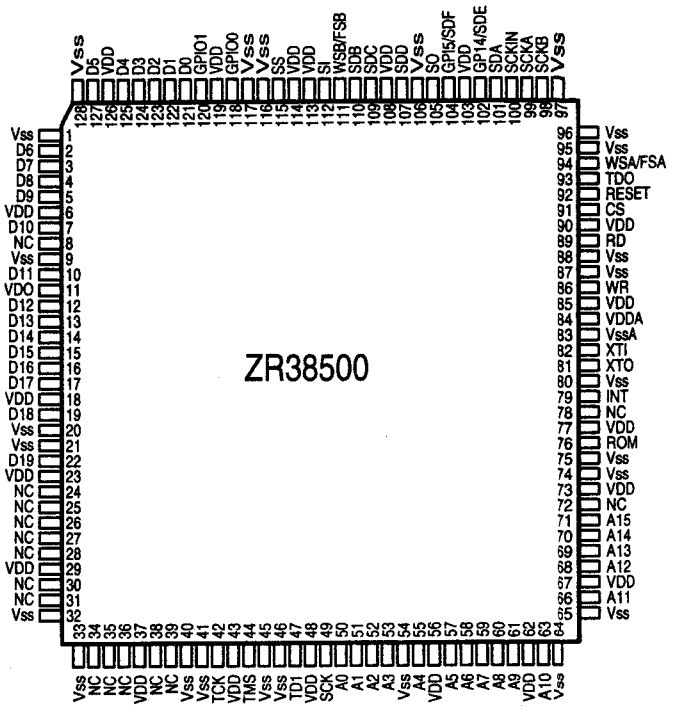

DSP56004(DS:IC002)

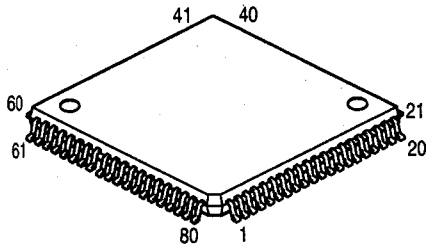

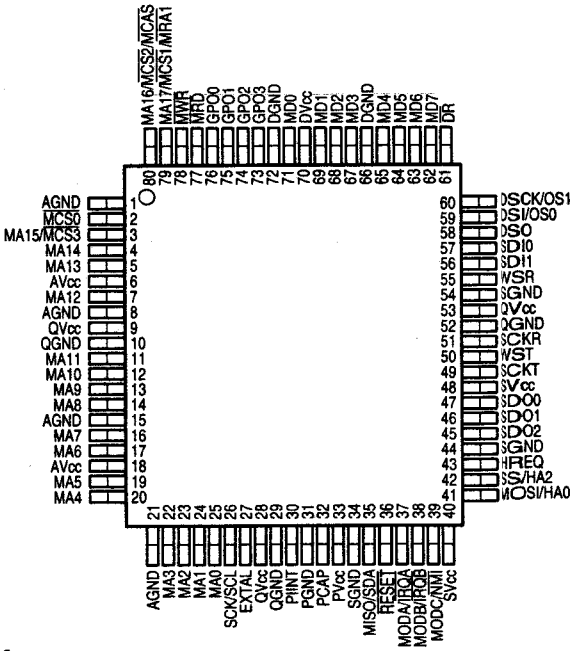

SG-531PH(33MHz)
(DS:IC003)
SG-531PH(46.08MHz)
(DS:IC027)
SG-531PH(12.288MHz)
(DG:IC173)

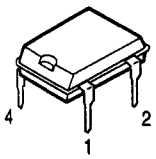

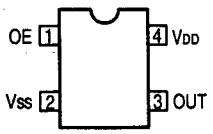

MAX903CPA
(DS:IC023)

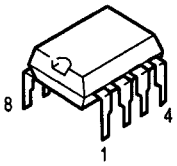

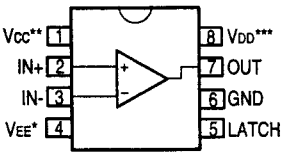

* ANALOG V- AND SUBSTRATE
** ANALOG V+
***ANALOG V+

HD74HC04FP (DS: IC004, 020)
HD74HC14FP (DS: IC006)
HD74HC74FP (DS: IC017, 029)
TC74HC00AF (DS: IC009, 032)
TC74HC164AF (DS: IC016, 019)
TC74HC7266AF (DS: IC018)
TC74HCU04AF
(DS: IC013, 024, 037)

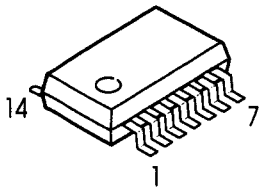

HD74HC04FP
TC74HCU04AF

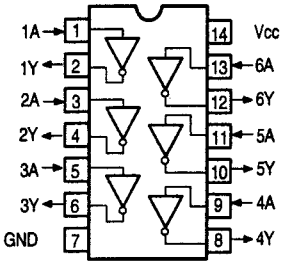

HD74HCU14FP

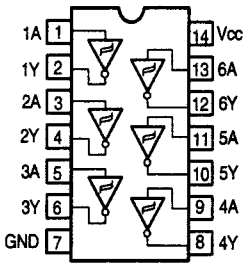

HD74HC74FP

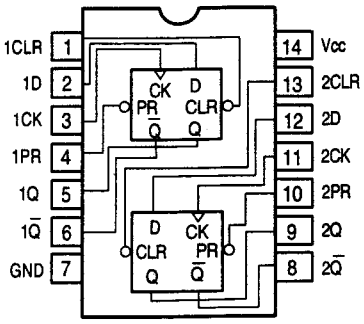

TC74HC00AF

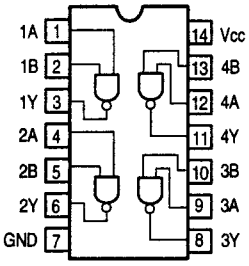

TC74HC164AF

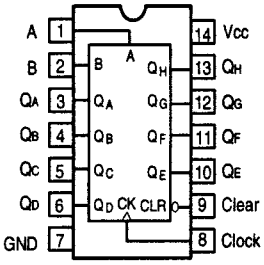

TC74HC7266AF

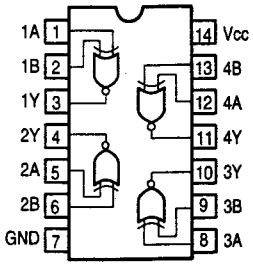

BA15218 (PO: IC425, 427)
NJM4556AD (DI: IC426)
NJM4560DD (DS: IC022,025)

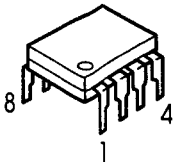

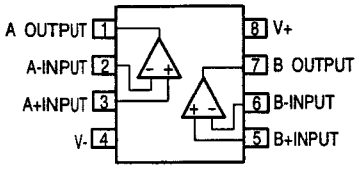

HD74HC157FP (DS: IC030)
TC74HC123AF (DS: IC033)
TC74HC151AF (DS: IC014, 015)

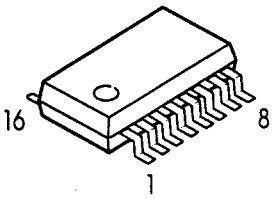

HD74HC157FP

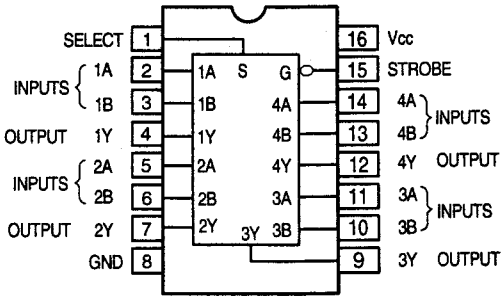

TC74HC123AF

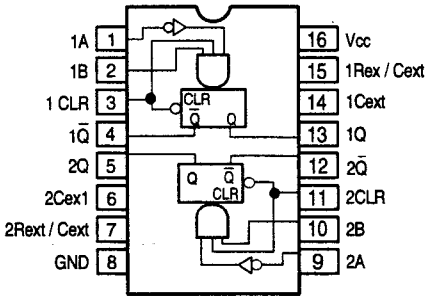

TC74HC151AF

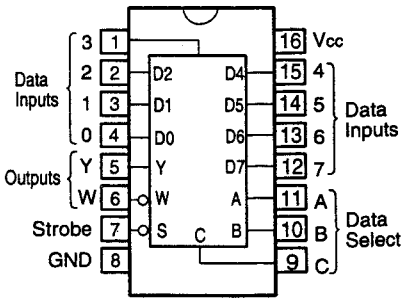

PD4606A
(DS: IC026)

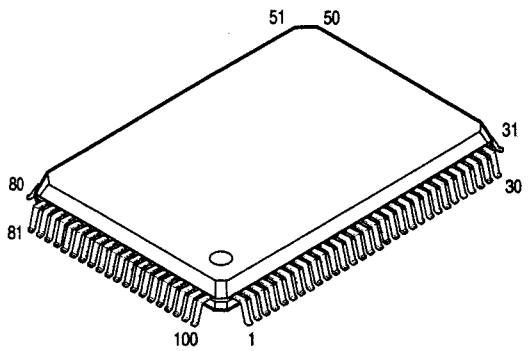

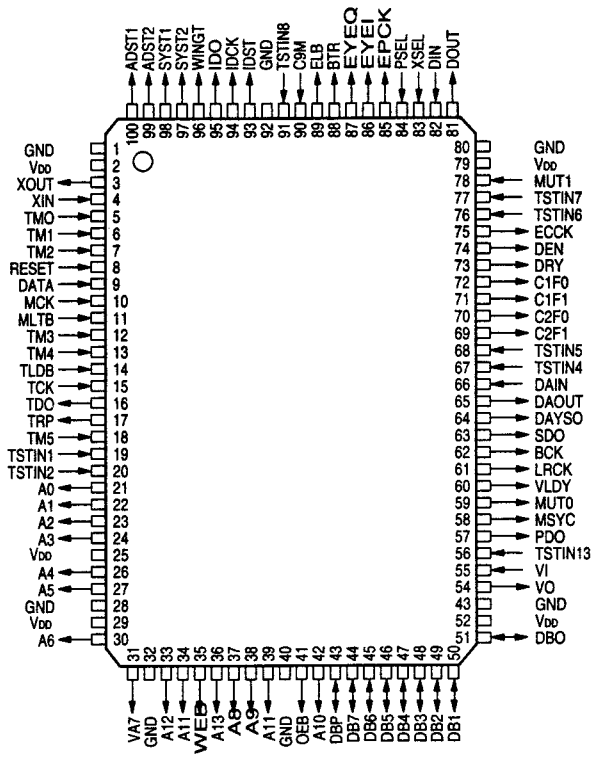

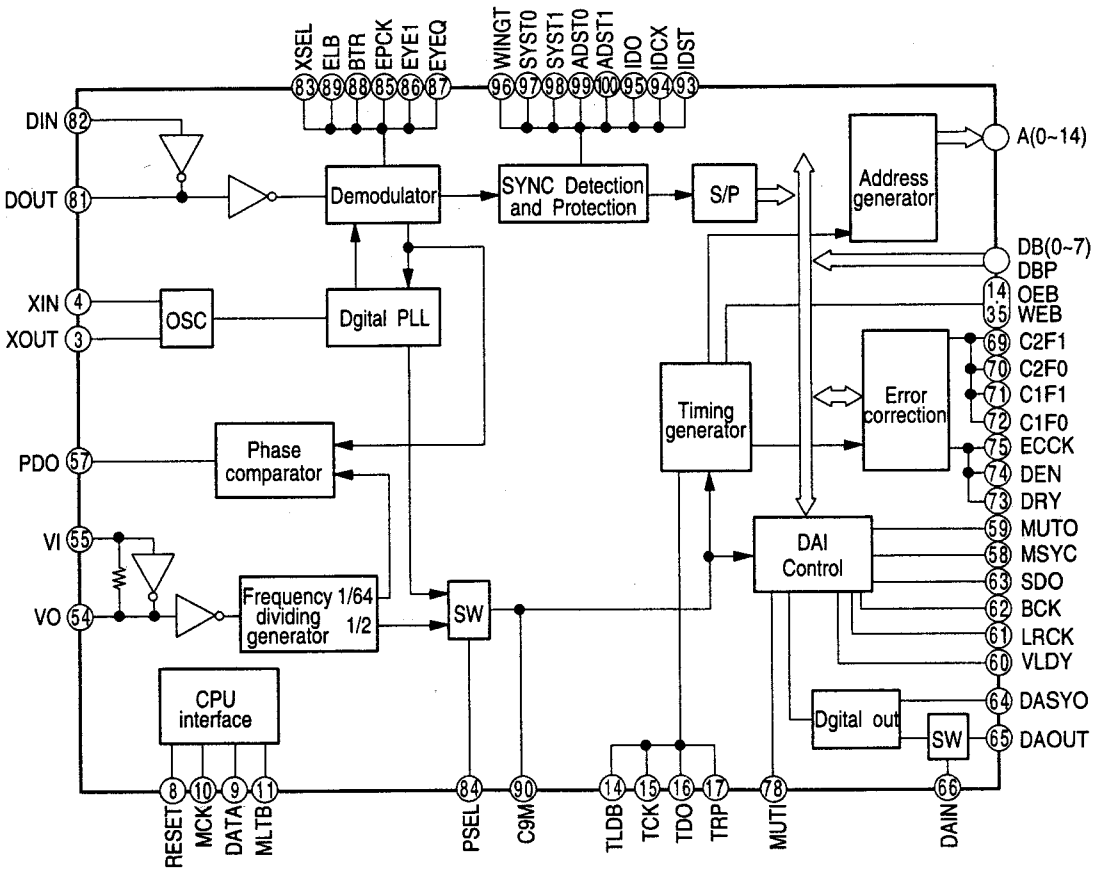

M66313FP(DI: IC101)

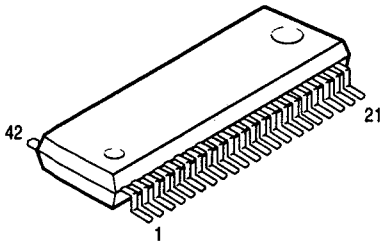

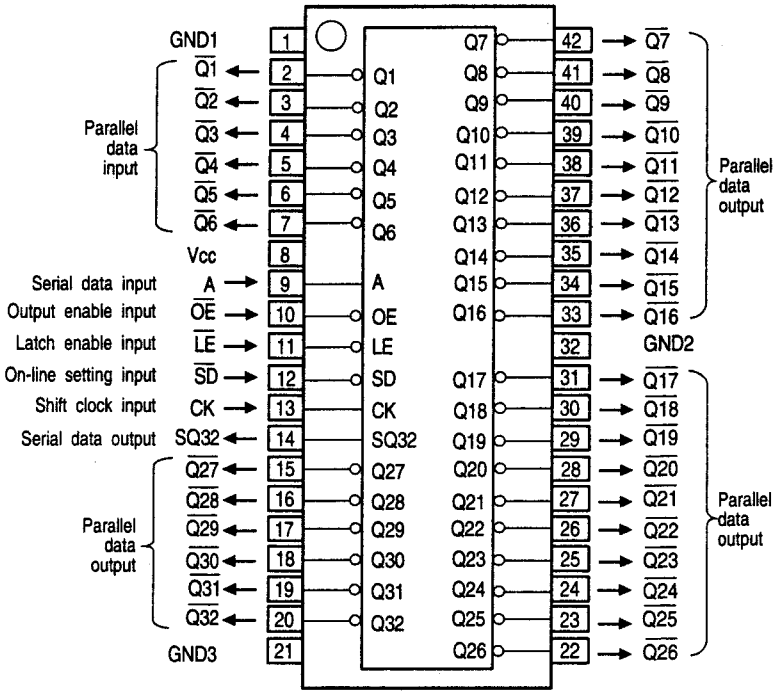

NJM7805FA(S)
(DG:IC101~105,107)(VI: IC903)
NJM7806FA(S)(PO: IC969,971,973)
NJM7809FA(S)(VI: IC904)
NJM7815FA(VI: IC965)

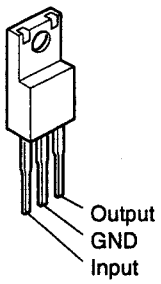

PCM1702P-L(DG: IC201~204)

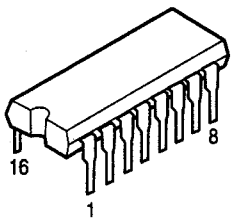

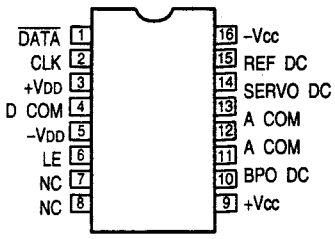

NJM7905FA(DG: IC106,108)
NJM7906FA(PO: IC970, 972)
NJM7915FA(VI: IC966)

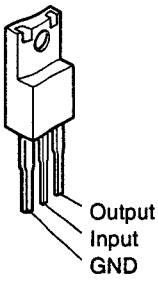

SM5841HS
(DG: IC211~213)

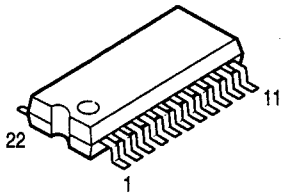

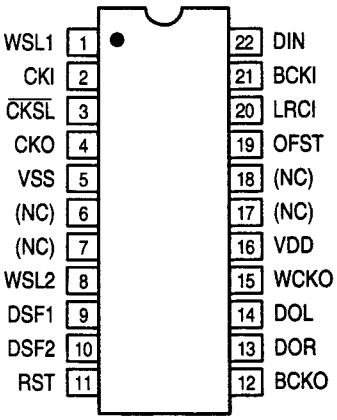

TC4051BP
(VI: IC754, 755, 803, 804, 807, 808)

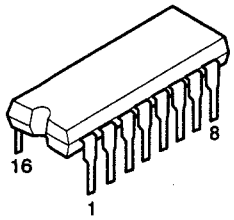

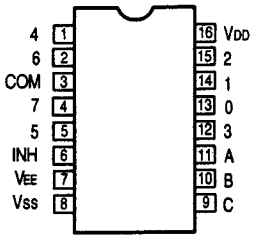

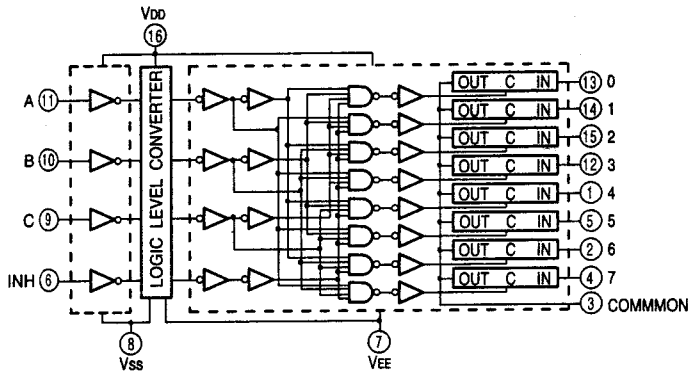

HD14066BP
(VI: IC756, 757, 805, 811)

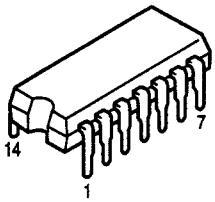

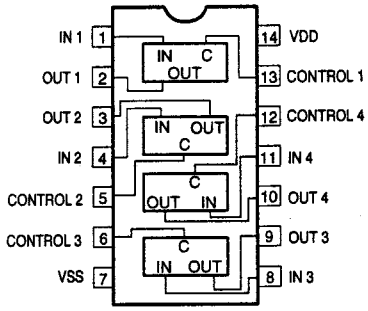

MC74HC4053N
(VI: IC813)

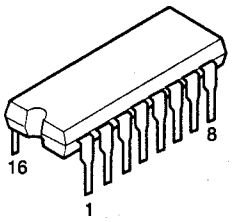

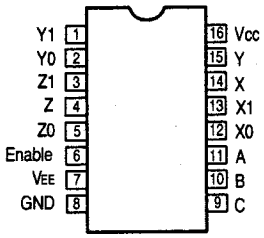

Control Inputs						
	Select					
Enable	C	B	A	ON Switches		
L	L	L	L	Z0	Y0	X0
L	L	L	H	Z0	Y0	X1
L	L	H	L	Z0	Y1	X0
L	L	H	H	Z0	Y1	X1
L	H	L	L	Z1	Y0	X0
L	H	L	H	Z1	Y0	X1
L	H	H	L	Z1	Y1	X0
L	H	H	H	Z1	Y1	X1
H	X	X	X	None		

X = Don't Care

NJM2229S (VI: IC815)

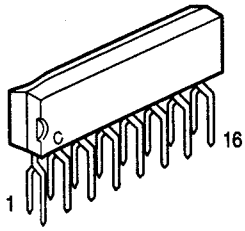

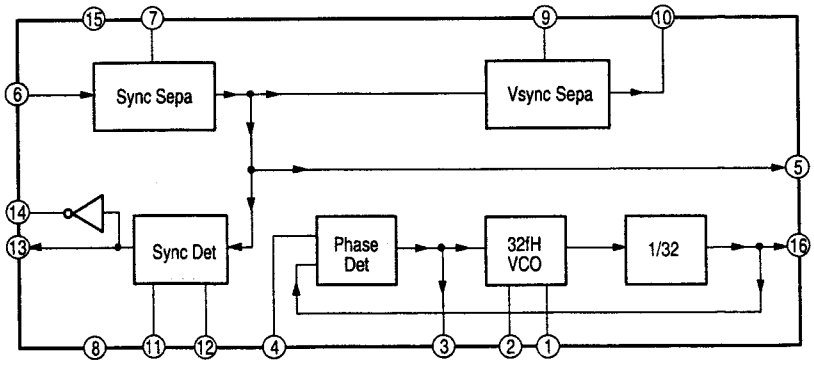

TC9274N-002(AU:IC402,403)

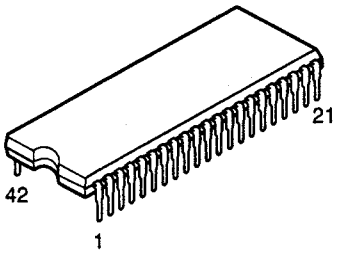

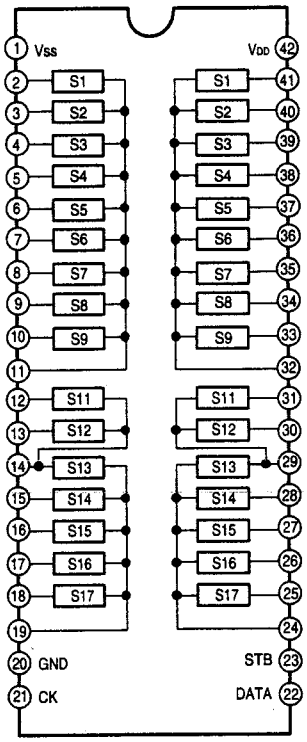

OP271
(AU: IC452)
MC14577CP
(VI: IC751~753, 758, 801, 802, 806, 809, 810, 812, 816)
(DS: IC021)
OP275GP
(AU: IC422, 429, 430) (PO: IC051, 651)
NJM2068DDC
(AU: IC418, 419, 421, 428, 433~436, 453~460, 701)
(DI : IC451, 652, 701)
NJM2068DAC
(DG: IC208~210, 722)
NJM5532DD
(DG: IC205~207)
NJM2082DD
(AU: IC420)

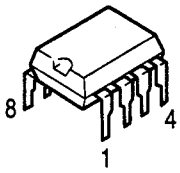

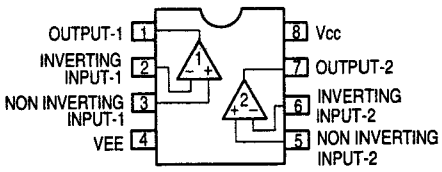

TC9299P
(DG: IC721)

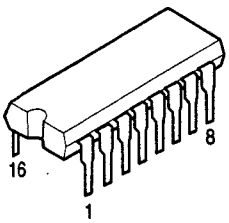

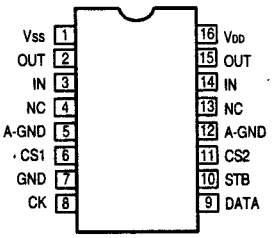

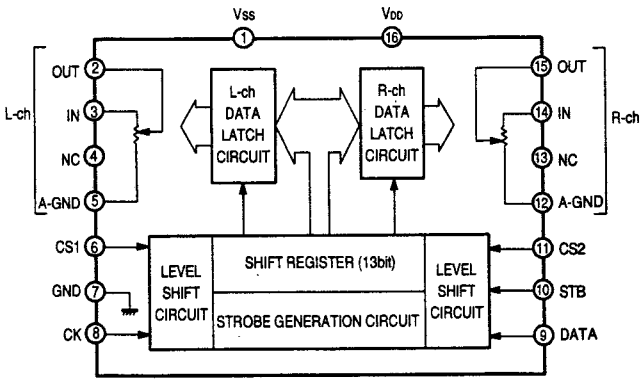

CX20106A
(VI: IC817)

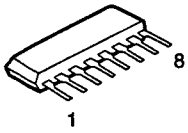

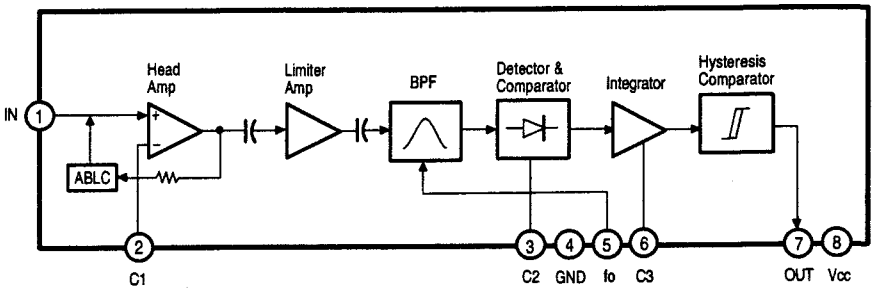

● IC PROTECTOR

ICP-N15 (PO: IC001)

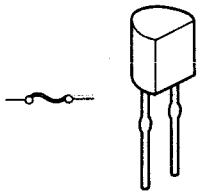

● OPTICAL

INPUT
GP1F32R
(DS: IC005, 010, 011)

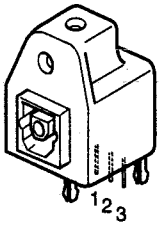

1. Vcc
2. GND
3. Vout

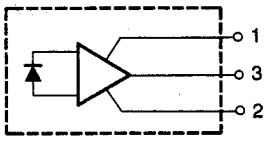

OUTPUT
GP1F32T
(DS: IC012)

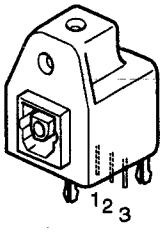

1. Vin
2. Vcc
3. GND

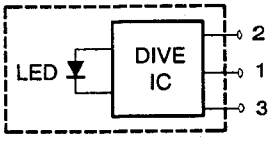

LED :Ga Al As
DRIVE IC :Silicon

● OTHER

SBX1610-52 (Remote Control Sensor)
(DI: IC103)

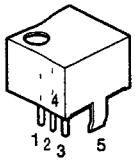

1. Vcc
2. Output
3. GND
4. Case Fin
5. Case Fin

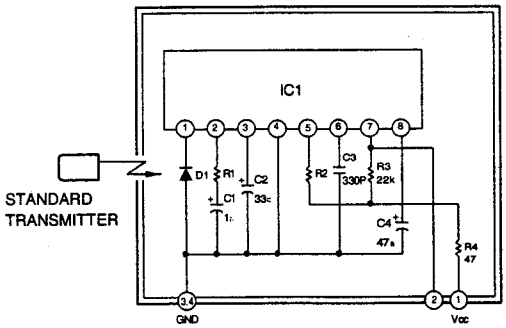

IC1 : CX20106A Chip
D1 : PIN Photodiode Chip
C1,C2,C4 : Aluminum Electrolytic Capacitor
C3 : SL Characteristic ±5%
R1 : Gain control resistor
R2 : fo control resistor (Using ±1%)
R (Other than above items)
: ±5%

● TRANSISTORS

2SA988 (E/F)
2SC1815 (BL)
2SC2878 (A/B)

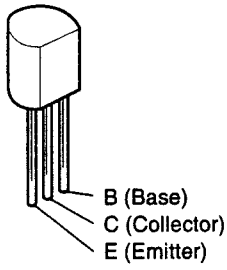

2SB1041 (R)
2SD1292 (R)

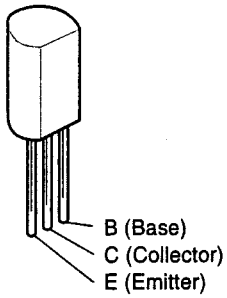

2SC3853 (O/P/Y)(Z)

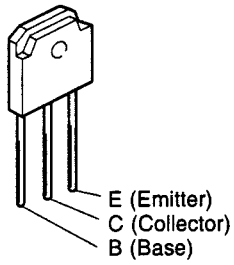

DTA114ES
DTC114ES

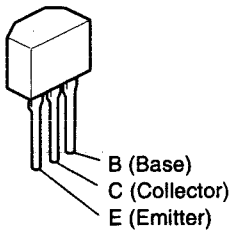

DTA114ES

PNP Type

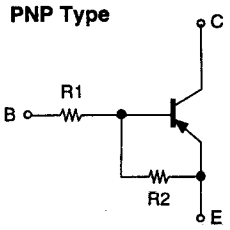

	R1	R2
DTA114ES	10kohm	10kohm

DTC114ES

NPN Type

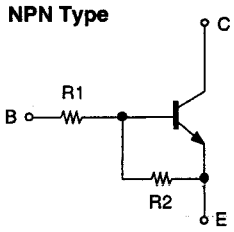

	R1	R2
DTC114ES	10kohm	10kohm

DTA114EK
DTA124EK
DTA143EK
DTC114EK
DTC143EK
DTC144EK

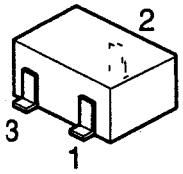

1: GND/Emitter
2: Out/Collector
3: In/Base

DTA114EK
DTA124EK
DTA143EK

PNP Type

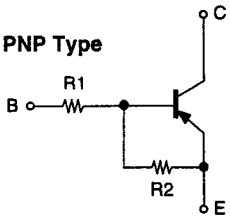

	R1	R2
DTA114EK	10kohm	10kohm
DTA124EK	22kohm	22kohm
DTA143EK	4.7kohm	4.7kohm

DTC114EK
DTC143EK
DTC144EK

NPN Type

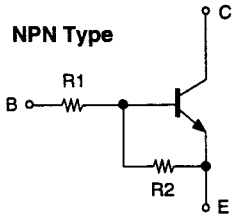

	R1	R2
DTC114EK	10kohm	10kohm
DTC143EK	4.7kohm	4.7kohm
DTC144EK	47kohm	47kohm

2SC1740S (E)

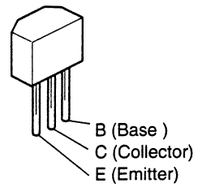

2SK184 (GR)/(BL)
2SK381 (B)/(C)

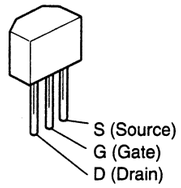

2SK209 (GR)

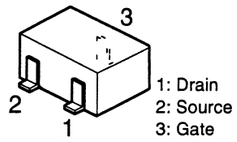

2SA1037K (S/R)
2SC2412K (S)

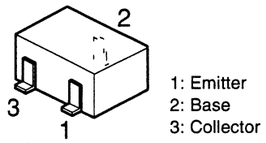

2SD1944

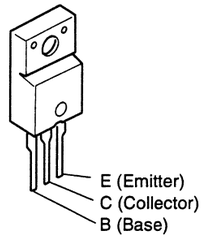

● DIODES (included LED)

1SS270A
1S2076A
MTZJ3.3A MTZJ9.1A
MTZJ6.2A MTZJ36A
MTZJ7.5A HZS9C-1

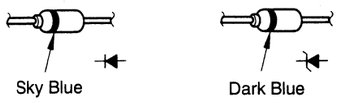

1SR35-200A

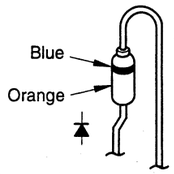

DSM1D2 (Type 3)

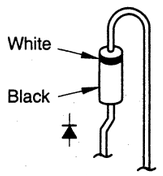

4D4B42(LC1)
(PO: D961)

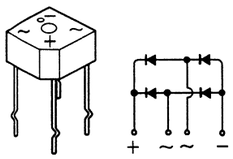

MA151A
(DS: D001~003)

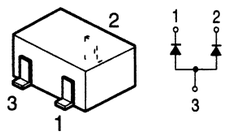

KV1851-TL
(DS: CD001)

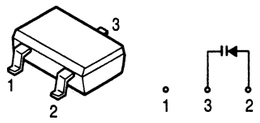

SEL1210S (Red)
(DI: LD101~106)

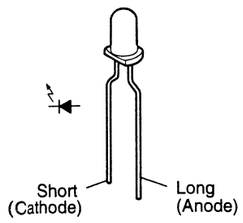

SEL-4414E (GN)
(DI: LD109, 110)
SEL-4214S (RD)
(DI: LD107, 108, 111, 112)
(AU: LD113~123)

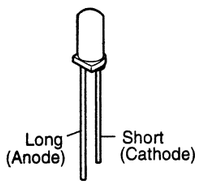

● DISPLAY

FL DISPLAY FIP16FM7R (Part No.: 3934156001) (DI: FL101)

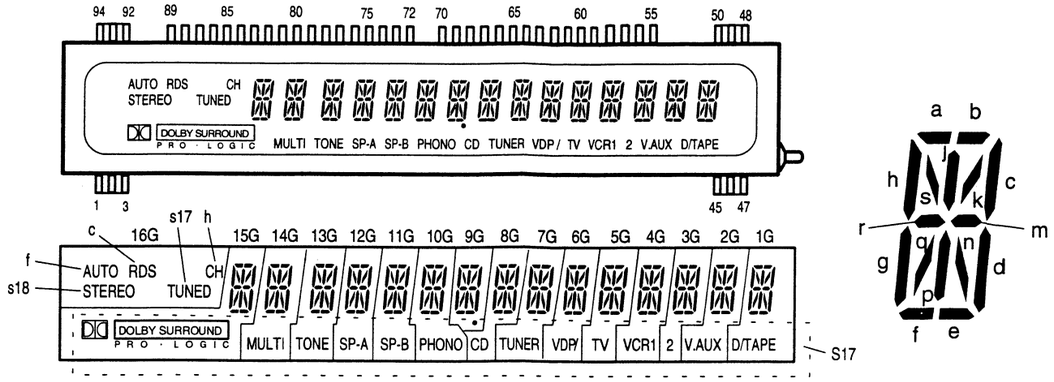

(UPPER)

TERMINAL No.	94	93	92	91	90	89	88	87	86	85	84	83	82	81						
ELECTRODE	F1	F1	F1	NP	NP	P a	P b	P c	P j	P k	P s	P h	P r	P m						
TERMINAL No.	80	79	78	77	76	75	74	73	72	71	70	69	68	67	66	65	64	63	62	61
ELECTRODE	P d	P n	P q	P p	P g	P f	P e	P s17	P s18	NP	16G	15G	14G	13G	12G	11G	10G	9G	8G	7G
TERMINAL No.								60	59	58	57	56	55	54	53	52	51	50	49	48
ELECTRODE								6G	5G	4G	3G	2G	1G	NP	NP	NP	NP	F2	F2	F2

(LOWER)

TERMINAL No.								35	36	37	38	39	40	41	42	43	44	45	46	47
ELECTRODE								NP	NP	NP	NP	NP	NP	NP	NP	NP	NP	F2	F2	F2
TERMINAL No.	15	16	17	18	19	20	21	22	23	24	25	26	27	28	29	30	31	32	33	34
ELECTRODE	NP	NP	NP	NP	NP	NP	NP	NP	NP	NP	NP	NP	NP	NP	NP	NP	NP	NP	NP	NP
TERMINAL No.	1	2	3	4	5	6	7	8	9	10	11	12	13	14						
ELECTRODE	F1	F1	F1	NP	NP	NP	NP	NP	NP	NP	NP	NP	NP	NP						

Notes: F: Filament G: Grid A: Anode NP: No Pin

LB-303VA
(DI: LD124)

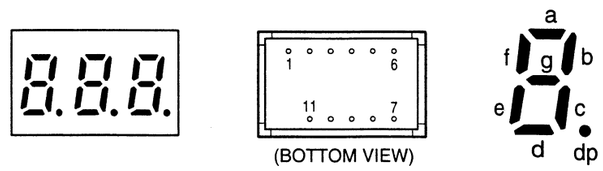

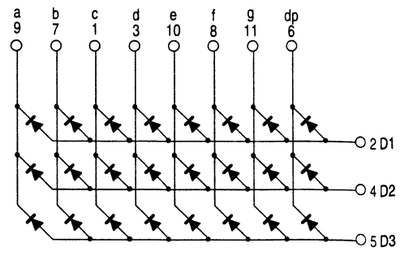

Pin connection

Pin No.	Function
1	c Segment cathode
2	Digit 1 common anode
3	d Segment cathode
4	Digit 2 common anode
5	Digit 3 common anode
6	D.P cathode
7	b Segment cathode
8	f Segment cathode
9	a Segment cathode
10	e Segment cathode
11	g Segment cathode

PRINTED WIRING BOARD (Pattern Side)

1U-2871A AUDIO UNIT ASS'Y

1U-2871A	
1	Audio Unit
2	Function LED Unit

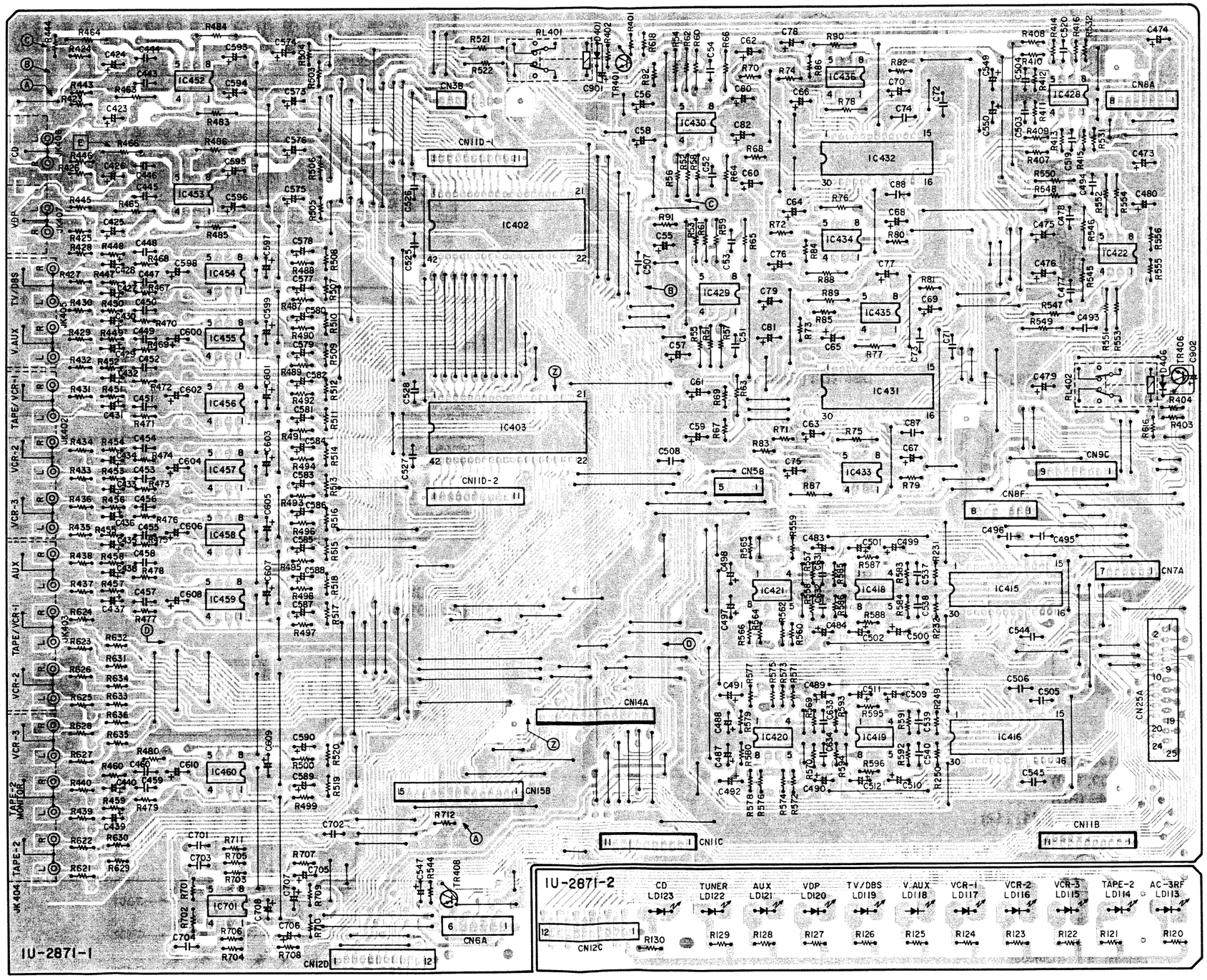

1U-2872A VIDEO UNIT ASS'Y

1U-2872A	
1	S-Video, Micon Unit
2	C-Video Unit
3	P. Supply-2 Unit

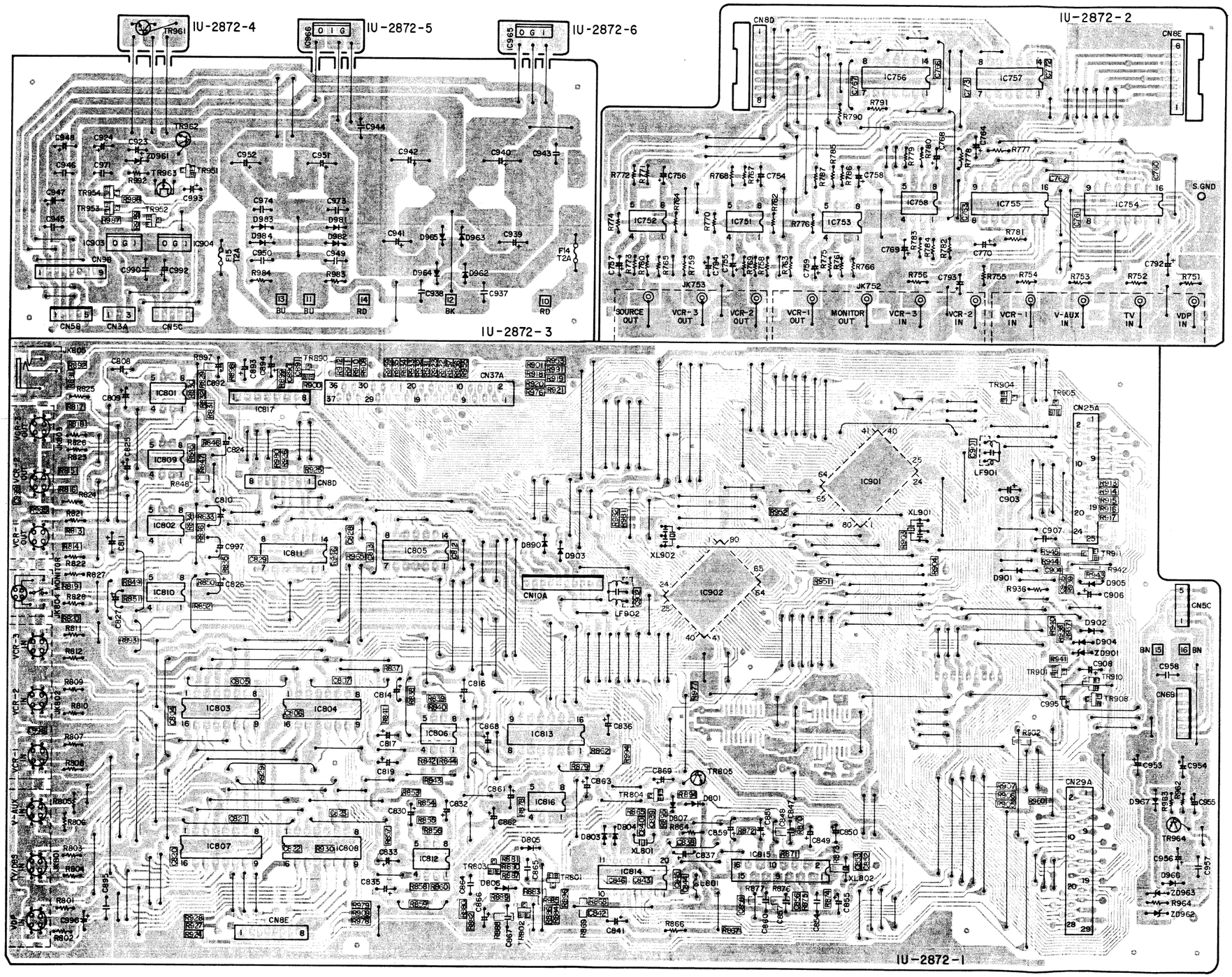

1U-2873A POWER SUPPLY ASS'Y

1U-2873A	
1	—
2	P. Supply-1 Unit
3	Pre Out Unit
4	Tone Unit

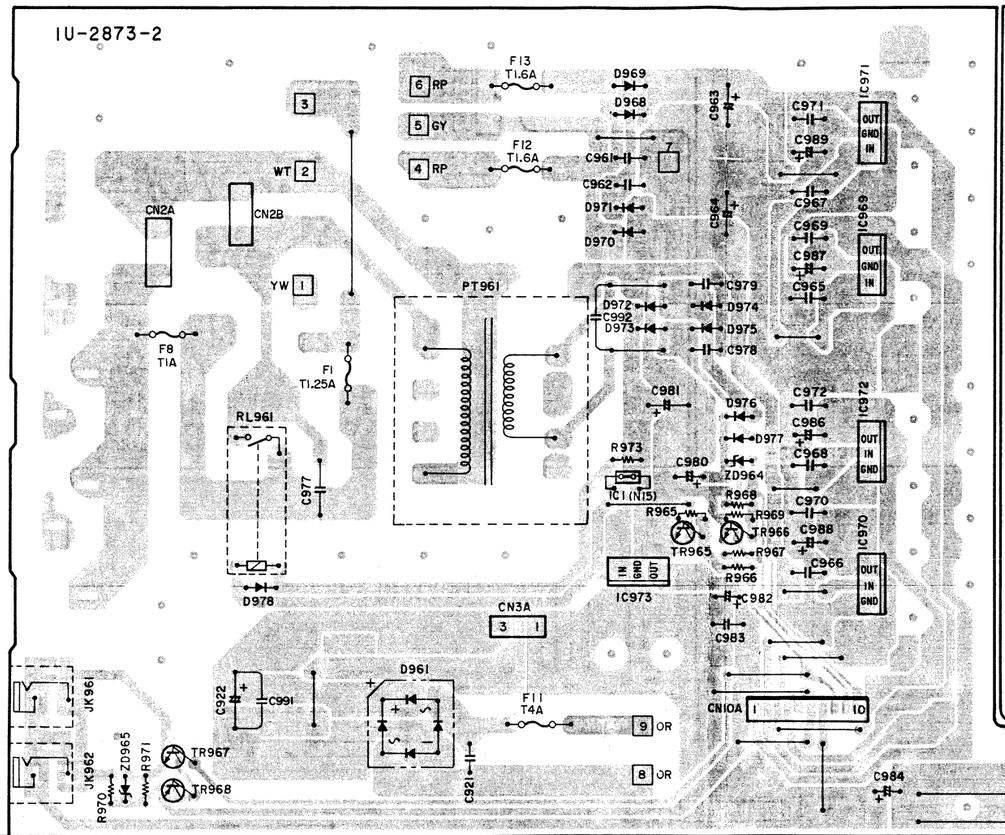

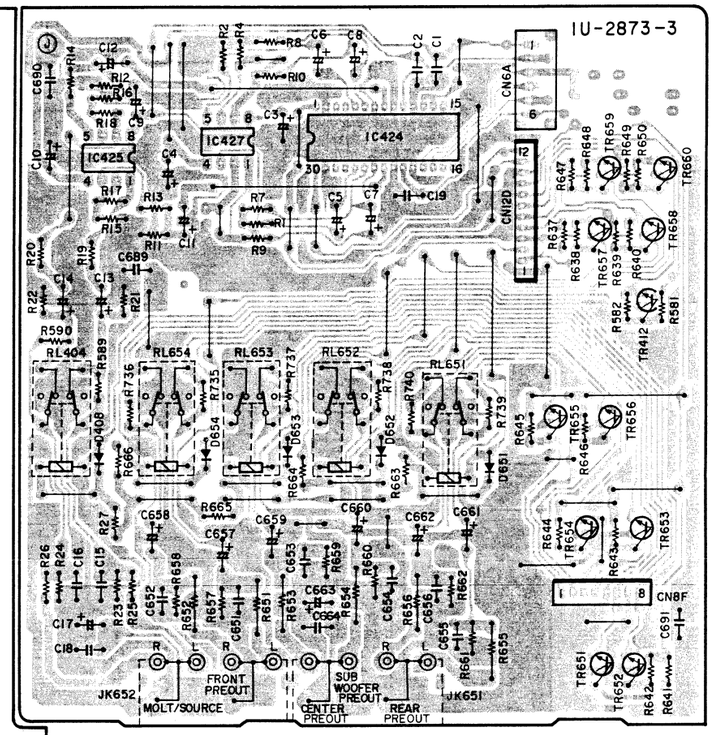

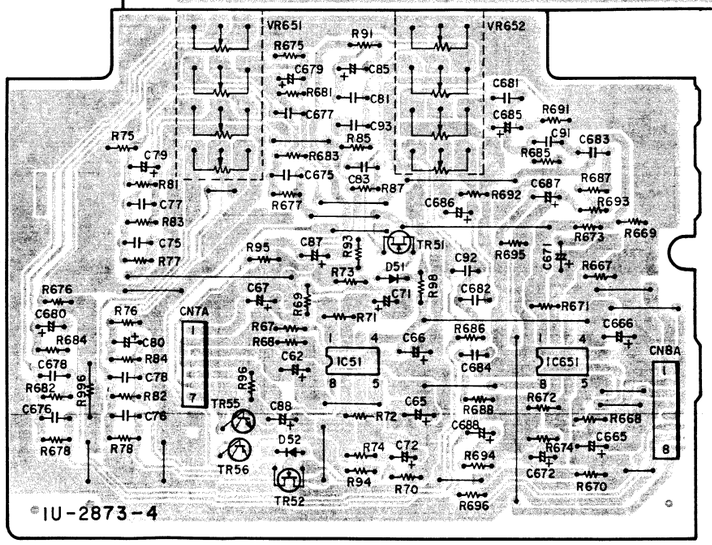

1U-2874A DISPLAY UNIT ASS'Y

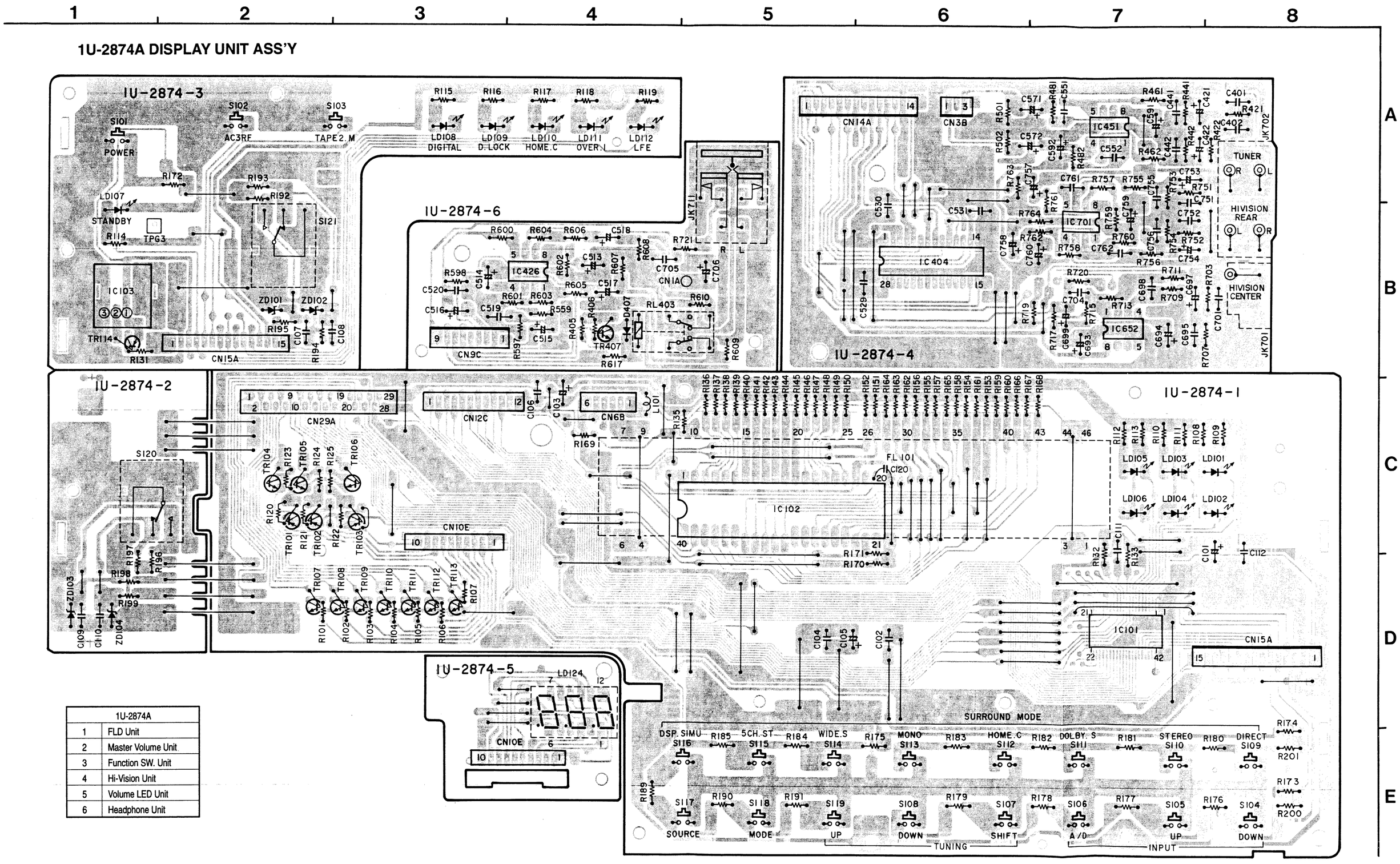

1U-2874A	
1	FLD Unit
2	Master Volume Unit
3	Function SW. Unit
4	Hi-Vision Unit
5	Volume LED Unit
6	Headphone Unit

1U-2875A DIGITAL UNIT ASS'Y

1U-2875A	
1	AD/DA Unit

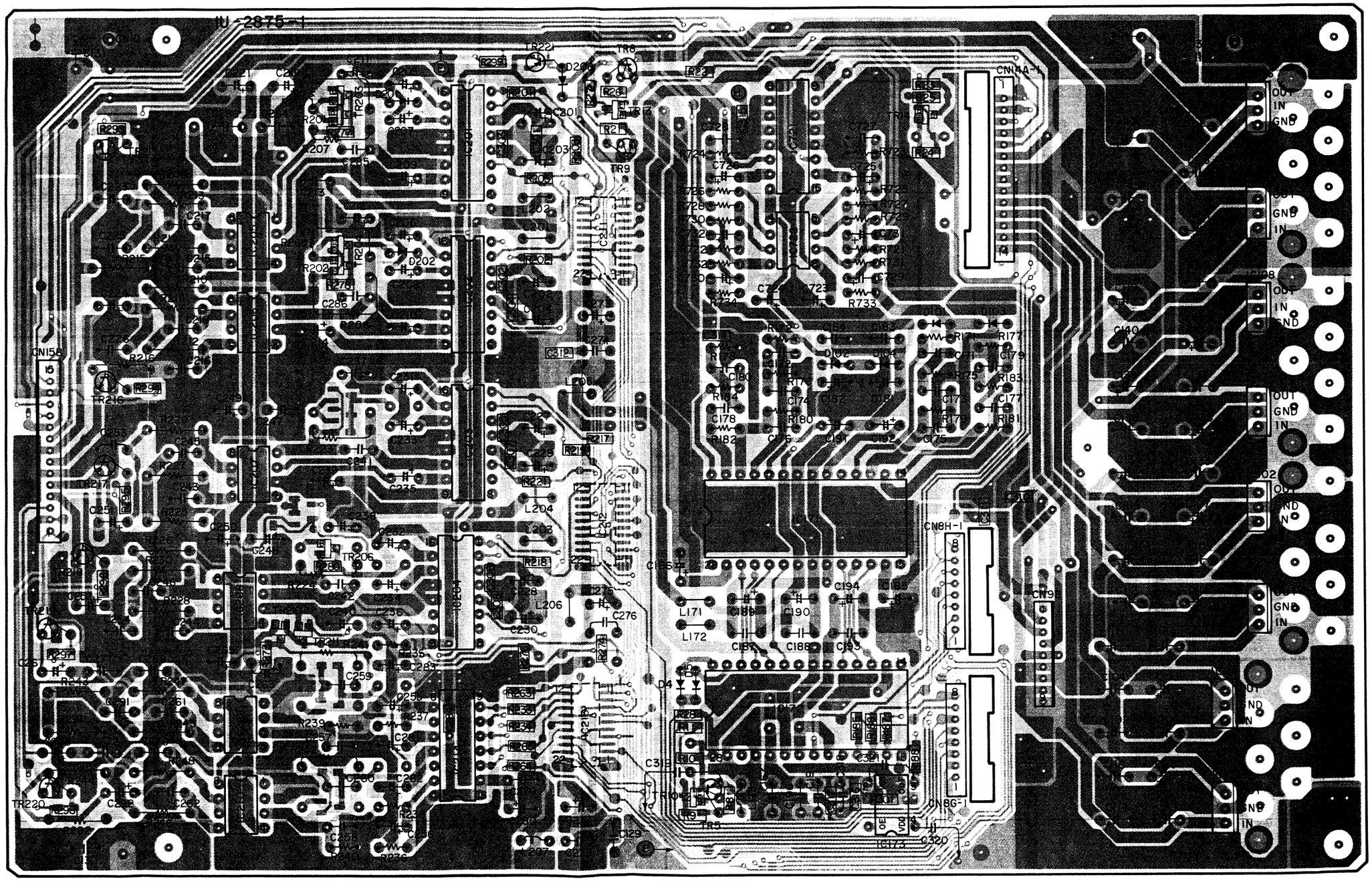

1U-2928A DSP UNIT ASS'Y

1U-2928A	
1	DSP Unit
2	Shield Unit

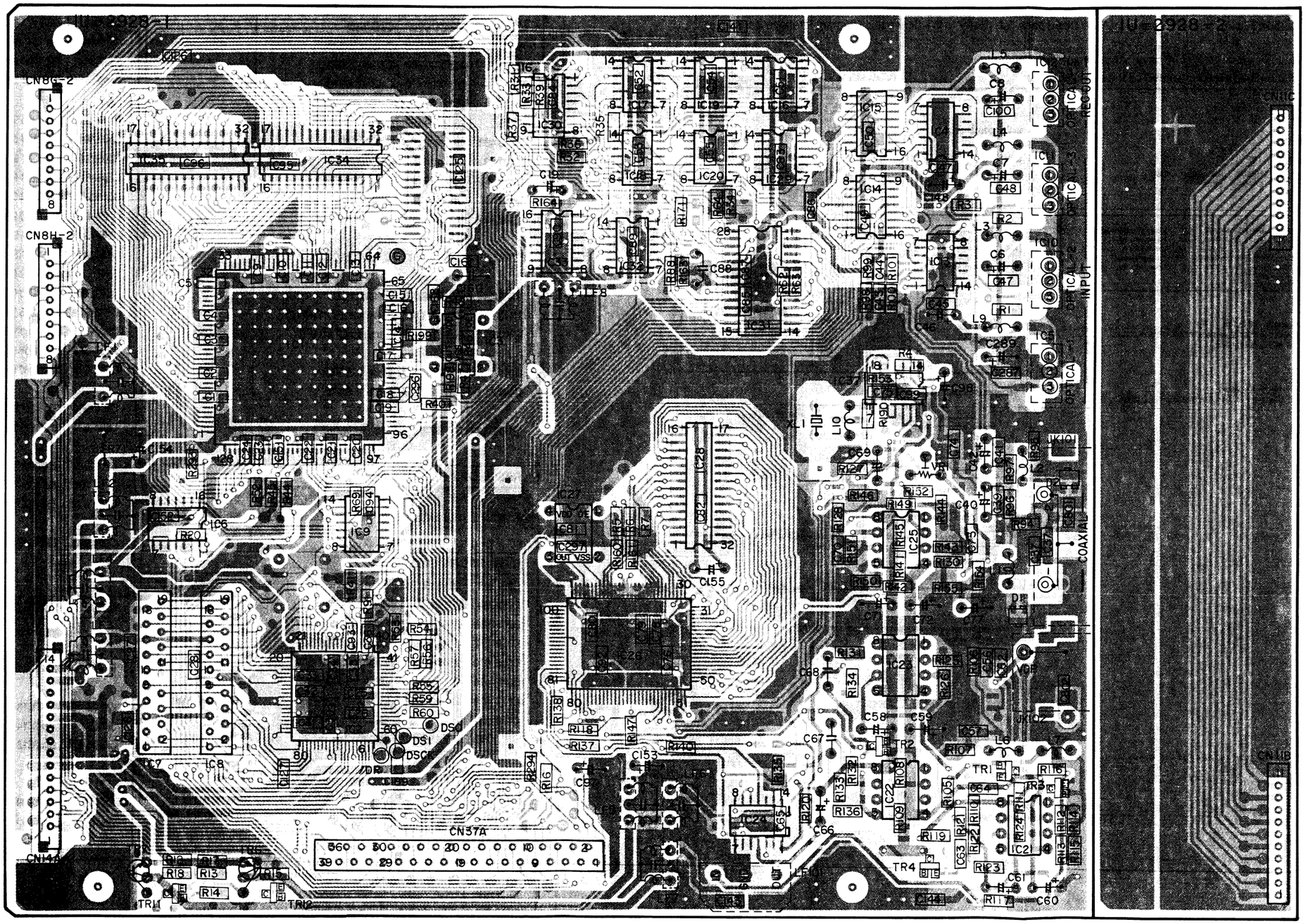

NOTE FOR PARTS LIST

- Part indicated with the mark " ◉ " are not always in stock and possibly to take a long period of time for supplying, or in some case supplying of part may be refused.
- When ordering of part, clearly indicate "1" and "I" (i) to avoid mis-supplying.
- Ordering part without stating its part number can not be supplied.
- Part indicated with the mark "★" is not illustrated in the exploded view.
- Not including Carbon Film ±5%, 1/4W Type in the P.W.Board parts list. (Refer to the Schematic Diagram for those parts.)

WARNING:
Parts marked with this symbol ⚠ ▒ have critical characteristics.
Use ONLY replacement parts recommended by the manufacturer.

• Resistors

Ex.: RN (Type) 14K (Shape and performance) 2E (Power) 182 (Resistance) G (Allowable error) FR (Others)

RD : Carbon RC : Composition RS : Metal oxide film RW : Winding RN : Metal film RK : Metal mixture	2B : 1/8W 2E : 1/4W 2H : 1/2W 3A : 1W 3D : 2W 3F : 3W 3H : 5W	F : ±1% G : ±2% J : ±5% K : ±10% M : ±20%	P : Pulse-resistant type NL : Low noise type NB : Non-burning type FR : Fuse-resistor F : Lead wire forming

• Resistance

1 8 2 ⇒ 1800 ohm = 1.8 kohm
Indicates number of zeros after effective number.
2-digit effective number.
• Units: ohm

1 R 2 ⇒ 1.2 ohm
1-digit effective number.
2-digit effective number, decimal point indicated by R.
• Units: ohm

• Capacitors

Ex.: CE (Type) 04W (Shape and performance) 1H (Dielectric strength) 2R2 (Capacity) M (Allowable error) BP (Others)

CE : Aluminum foil electrolytic CA : Aluminum solid electrolytic CS : Tantalum electrolytic CQ : Film CK : Ceramic CC : Ceramic CP : Oil CM : Mica CF : Metallized CH : Metallized	0J : 6.3V 1A : 10V 1C : 16V 1E : 25V 1V : 35V 1H : 50V 2A : 100V 2B : 125V 2C : 160V 2D : 200V 2E : 250V 2H : 500V 2J : 630V	F : ±1% G : ±2% J : ±5% K : ±10% M : ±20% Z : +80% −20% P : +100% −0% C : ±0.25pF D : ±0.5pF = : Others	HS : High stability type BP : Non-polar type HR : Ripple-resistant type DL : For charge and discharge HF : For assuring high frequency U : UL part C : CSA part W : UL-CSA type F : Lead wire forming

• Capacity (electrolyte only)

2 2 2 ⇒ 2200μF
Indicates number of zeros after effective number.
2-digit effective number.
• Units: μF.

2 R 2 ⇒ 2.2μF
1-digit effective number.
2-digit effective number, decimal point indicated by R.
• Units: μF.

• Capacity (except electrolyte)

2 2 2 ⇒ 2200pF = 0.0022μF
(More than 2) — Indicates number of zeros after effective number.
2-digit effective number.
• Units: μF.

2 2 1 ⇒ 220pF
(0 or 1) — Indicates number of zeros after effective number.
2-digit effective number.
• Units: pF.

• When the dielectric strength is indicated in AC, "AC" is included after the dieelectric strength value.

PRINTED VIRING BOARD PARTS LIST

1U-2871A AUDIO UNIT Ass'y

Ref. No.	Part No.	Part Name	Remarke
SEMICONDUCTORS GROUP			
IC402,403	262 2219 002	IC TC9274N-002	
IC415,416	262 2214 007	IC LC7536	
IC418,419	263 0609 002	IC NJM2068DDC	
IC420	263 0743 007	IC NJM2082DD	
IC421	263 0609 002	IC NJM2068DDC	
IC422	263 0990 009	IC :*OP275GP	
IC428	263 0609 002	IC NJM2068DDC	
IC429,430	263 0990 009	IC :*OP275GP	
IC431,432	262 2214 007	IC LC7536	
IC433~436	263 0609 002	IC NJM2068DDC	
IC452	263 0757 006	IC :OP271	
IC453~460	263 0609 002	IC NJM2068DDC	
IC701	263 0609 002	IC NJM2068DDC	
TR401	273 0388 906	Transistor 2SC1740S(E)	
TR406	273 0388 906	Transistor 2SC1740S(E)	
TR408	269 0046 906	Transistor DTA114ES	Built in resistor
D401	276 0432 903	Diode 1SS270A	
D406	276 0432 903	Diode 1SS270A	
LD113~123	393 9408 908	LED SEL-4214S	Red
RESISTORS GROUP			
⚠R616	241 2379 974	Carbon 910ohm 1/4W(NB)	RD14B2E911JNBS
⚠R618	241 2379 974	Carbon 910ohm 1/4W(NB)	RD14B2E911JNBS
CAPACITORS GROUP			
C051,052	255 6180 948	Film 15pF/50V	CQ09S1H150J(SMT)
C053,054	255 6180 919	Film 33pF/50V	CQ09S1H330J(SMT)
C055~058	254 4356 001	Electrolytic 10μF/50V	CE04W1H100(ARS)
C059~062	254 4256 739	Electrolytic 47μF/50V	CE04W1H470MC(ARS)
C063~070	254 4356 001	Electrolytic 10μF/50V	CE04W1H100(ARS)
C071~074	253 1181 917	Ceramic 0.022μF/50V	CK45F1H223Z
C075~078	254 4356 027	Electrolytic 22μF/50V	CE04W1H220M(ARS)
C079~082	254 4356 001	Electrolytic 10μF/50V	CE04W1H100(ARS)
C087,088	253 1181 904	Ceramic 0.01μF/50V	CK45F1H103Z
C423~426	254 4356 001	Electrolytic 10μF/50V	CE04W1H100(ARS)
C427~440	254 4254 909	Electrolytic 10μF/16V	CE04W1C100M
C443~446	255 4235 918	Film 100pF/100V	CQ93P2A101J(NH)
C445,446	255 6177 948	Film 100pF/50V	CQ09S1H101J(SMT)
C447~460	253 1179 903	Ceramic 100pF/50V	CK45B1H101K
C473~476	254 4356 001	Electrolytic 10μF/50V	CE04W1H100(ARS)
C477,478	255 6177 980	Film 220pF/50V	CQ09S1H221J(SMT)
C479,480	254 4356 739	Electrolytic 47μF/50V	CE04W1H470MC(ARS)
C483,484	254 4254 909	Electrolytic 10μF/16V	CE04W1C100M
C487,488	254 4260 948	Electrolytic 1μF/50V	CE04W1H010M
C489,490	254 4254 909	Electrolytic 10μF/16V	CE04W1C100M
C491,492	254 4254 938	Electrolytic 47μF/16V	CE04W1C470M
C493,494	255 6177 980	Film 220pF/50V	CQ09S1H221J(SMT)
C495,496	253 1181 917	Ceramic 0.022μF/50V	CK45F1H223Z
C497,498	254 4260 948	Electrolytic 1μF/50V	CE04W1H010M
C499	254 4254 909	Electrolytic 10μF/16V	CE04W1C100M
C500~502	254 4254 909	Electrolytic 10μF/16V	CE04W1C100M
C503,504	255 6178 934	Film 560pF/50V	CQ09S1H561J(SMT)
C505,506	253 1181 917	Ceramic 0.022μF/50V	CK45F1H223Z
C509~512	254 4254 909	Electrolytic 10μF/16V	CE04W1C100M
C519,520	255 6178 934	Film 560pF/50V	CQ09S1H561J(SMT)
C525~528	253 9030 989	BC ceramic 0.022μF/25V	CK45=1E223K
C537~540	253 1179 903	Ceramic 100pF/50V	CK45B1H101K
C544,545	253 1181 904	Ceramic 0.01μF/50V	CK45F1H103Z
C547	254 4260 948	Electrolytic 1μF/50V	CE04W1H010M
C549,550	254 4260 948	Electrolytic 1μF/50V	CE04W1H010M
C573~576	254 4256 739	Electrolytic 47μF/50V	CE04W1H470MC(ARS)
C577~590	254 4254 938	Electrolytic 47μF/16V	CE04W1C470M
C593~596	254 4356 001	Electrolytic 10μF/50V	CE04W1H100(ARS)
C597~599	254 4260 948	Electrolytic 1μF/50V	CE04W1H010M
C600~610	254 4260 948	Electrolytic 1μF/50V	CE04W1H010M
C631~634	253 1179 903	Ceramic 100pF/50V	CK45B1H101K
C701~704	256 1035 910	Metalized cap. 0.22μF/50V	CF93A1H224J
C705,706	254 4254 938	Electrolytic 47μF/16V	CE04W1C470M
C707,708	254 4260 948	Electrolytic 1μF/50V	CE04W1H010M
C901,902	254 4313 905	Electrolytic 3.3μF/50V	CE04W1H3R3M(ASF)

OTHERS PARTS GROUP				Q'ty
	—	(P.W.board)		(1)
RL401,402	214 0127 003	Relay (RY-12W)		2
JK402~404	204 8513 007	6 P pin jack (S-GND)		3
JK405	204 8514 006	4 P pin jack (S-GND)		1
JK406,407	204 8518 002	2 P pin jack		2
CN11D	205 0409 015	11P Dip socket		1
CN3B	205 0343 032	3 P connctor base(KR-PH)		1
CN5B	205 0343 058	5 P connctor base(KR-PH)		1
CN7A	205 0343 074	7 P connctor base(KR-PH)		1
CN8A,8F	205 0343 087	8 P connctor base(KR-PH)		2
CN9C	205 0343 090	9 P connctor base(KR-PH)		1
CN14A	205 0375 042	14 P connctor base(KR-PH)		1
CN12D	205 0536 027	12 P connector socket		1

Ref. No.	Part No.	Part Name	Remarke	Q'ty
CN15B	205 0375 055	15 P connector base(KR-PH)		1
CN6A	205 0748 064	JL connector (R)		1
CN25A	205 0736 089	25 P FFC connector base		1
CN11B,C	205 0535 099	11 P connector base		2
CN12C	204 6377 012	12 P KR-DS connector cord		1
A	203 0604 034	1 P contact Ass'y		1
B,C	203 0534 081	1 P SIN connector Ass'y		2
D	203 0604 047	1 P contact Ass'y		1
Z	203 0383 054	1 P SIN connector cord		1
	002 0050 014	5 C ribbon wire Ass'y	for CN11D	1
	002 0052 009	6 C ribbon wire Ass'y	for CN11D	1

1U-2872A VIDEO UNIT Ass'y

Ref. No.	Part No.	Part Name	Remarke
SEMICONDUCTORS GROUP			
IC751~753	263 1018 003	IC MC14577CP	
IC754,755	262 1108 004	IC TC4051BP	
IC756,757	262 0276 005	IC HD14066BP	
IC758	263 1018 003	IC MC14577CP	
IC801,802	263 1018 003	IC MC14577CP	
IC803,804	262 1108 004	IC TC4051BP	
IC805	262 0276 005	IC HD14066BP	
IC806	263 1018 003	IC MC14577CP	
IC807,808	262 1108 004	IC TC4051BP	
IC809,810	263 1018 003	IC MC14577CP	
IC811	262 0276 005	IC HD14066BP	
IC812	263 1018 003	IC MC14577CP	
IC813	262 2067 005	IC MC74HC4053N	
IC814	262 2215 006	IC M35015-***SP	
IC815	263 0682 003	IC NJM2229S	
IC816	263 1018 003	IC MC14577CP	
IC817	263 0755 008	IC CX20106A	
IC901	262 2270 009	IC TMP87CS71F-****	μ-com
IC902	262 2216 102	IC TMP87CP71F-****	μ-com
IC903	263 0809 006	IC NJM7805FA(S)	Regulator +5V
IC904	263 0753 000	IC NJM7809FA(S)	Regulator +9V
IC965	263 0812 006	IC NJM7815FA(S)	Regulator +15V
IC966	263 0561 001	IC NJM7915FA(S)	Regulator -15V
TR801	271 0238 908	Transistor 2SA1037K(S/R)	
TR802	273 0384 900	Transistor 2SC2412K(S)	
TR803	269 0082 902	Transistor DTC114EK	Built in resistor
TR804	273 0384 900	Transistor 2SC2412K(S)	
TR805	273 0198 918	Transistor 2SC1815(BL)	
TR890	269 0083 901	Transistor DTA114EK	Built in resistor
TR901	269 0054 901	Transistor DTC144EK	Built in resistor
TR904,905	269 0054 901	Transistor DTC144EK	Built in resistor
TR908	269 0054 901	Transistor DTC144EK	Built in resistor
TR910	269 0083 901	Transistor DTA114EK	Built in resistor
TR911	273 0384 900	Transistor 2SC2412K(S)	
TR951	269 0047 905	Transistor DTA143EK	Built in resistor
TR952	273 0384 900	Transistor 2SC2412K(S)	
TR953	269 0054 901	Transistor DTC144EK	Built in resistor
TR954	273 0384 900	Transistor 2SC2412K(S)	
TR961	273 0387 004	Transistor 2SC3853(O/P/Y)(Z)	
TR962	274 0138 007	Transistor 2SD1944	
TR963	275 0048 912	FET 2SK381(B)/(C)	N type FET
TR964	271 0131 924	Transistor 2SA988(E/F)	
D801	276 0432 903	Diode 1SS270A	

Ref. No.	Part No.	Part Name	Remarke
D803~806	276 0432 903	Diode 1SS270A	
D807	276 0432 903	Diode 1SS270A	
D890	276 0432 903	Diode 1SS270A	
D901	276 0049 914	Diode 1S2076A	
D902~905	276 0432 903	Diode 1SS270A	
D962~965	276 0548 910	Diode DSM1D2	(Type-3)
D966,967	276 0553 905	Diode 1SR35-200A	
D981~984	276 0548 910	Diode DSM1D2	(Type-3)
ZD901	276 0634 905	Zener diode MTZJ3.3A	3.3V
ZD961	276 0469 905	Zener diode HZS9C-1	9V
ZD962	276 0645 978	Zener diode MTZJ36A	36V
ZD963	276 0644 937	Zener diode MTZJ9.1A	9.1V
RESISTORS GROUP			
R813~820	247 0010 961	Carbon chip 22kohm 1/10W	RM73B--223J
R829	247 0005 905	Carbon chip 100ohm 1/10W	RM73B--101J
R830	247 0009 985	Carbon chip 10kohm 1/10W	RM73B--103J
R831	247 0005 905	Carbon chip 100ohm 1/10W	RM73B--101J
R832	247 0009 985	Carbon chip 10kohm 1/10W	RM73B--103J
R833	247 0005 905	Carbon chip 100ohm 1/10W	RM73B--101J
R834	247 0009 985	Carbon chip 10kohm 1/10W	RM73B--103J
R835	247 0005 905	Carbon chip 100ohm 1/10W	RM73B--101J
R836	247 0009 985	Carbon chip 10kohm 1/10W	RM73B--103J
R837	247 0005 905	Carbon chip 100ohm 1/10W	RM73B--101J
R838	247 0009 985	Carbon chip 10kohm 1/10W	RM73B--103J
R839	247 0006 975	Carbon chip 510ohm 1/10W	RM73B--511J
R840	247 0006 988	Carbon chip 560ohm 1/10W	RM73B--561J
R841	247 0005 905	Carbon chip 100ohm 1/10W	RM73B--101J
R842	247 0009 985	Carbon chip 10kohm 1/10W	RM73B--103J
R843	247 0006 975	Carbon chip 510ohm 1/10W	RM73B--511J
R844	247 0006 988	Carbon chip 560ohm 1/10W	RM73B--561J
R845	247 0009 985	Carbon chip 10kohm 1/10W	RM73B--103J
R846	247 0005 905	Carbon chip 100ohm 1/10W	RM73B--101J
R847	247 0009 985	Carbon chip 10kohm 1/10W	RM73B--103J
R848	247 0005 905	Carbon chip 100ohm 1/10W	RM73B--101J
R849	247 0009 985	Carbon chip 10kohm 1/10W	RM73B--103J
R850	247 0005 905	Carbon chip 100ohm 1/10W	RM73B--101J
R851	247 0009 985	Carbon chip 10kohm 1/10W	RM73B--103J
R852,853	247 0005 905	Carbon chip 100ohm 1/10W	RM73B--101J
R854	247 0009 985	Carbon chip 10kohm 1/10W	RM73B--103J
R855	247 0006 975	Carbon chip 510ohm 1/10W	RM73B--511J
R856	247 0006 988	Carbon chip 560ohm 1/10W	RM73B--561J
R857	247 0005 905	Carbon chip 100ohm 1/10W	RM73B--101J
R858	247 0009 985	Carbon chip 10kohm 1/10W	RM73B--103J
R859	247 0006 975	Carbon chip 510ohm 1/10W	RM73B--511J
R860	247 0006 988	Carbon chip 560ohm 1/10W	RM73B--561J

Ref. No.	Part No.	Part Name	Remarke
R862	247 0009 985	Carbon chip 10kohm 1/10W	RM73B--103J
⚠R864	241 2387 908	Carbon film 1ohm 1/4W(NB)	RD14B2E010JNBS
R865	247 0007 945	Carbon chip 1kohm 1/10W	RM73B--102J
⚠R866	241 2387 908	Carbon film 1ohm 1/4W(NB)	RD14B2E010JNBS
R867	247 0002 966	Carbon chip 10ohm 1/10W	RM73B--100J
R868	247 0007 945	Carbon chip 1kohm 1/10W	RM73B--102J
R869	247 0008 902	Carbon chip 1.8kohm 1/10W	RM73B--182J
R870	247 0007 945	Carbon chip 1kohm 1/10W	RM73B--102J
R871	247 0013 984	Carbon chip 470kohm 1/10W	RM73B--474J
R872	247 0011 902	Carbon chip 33kohm 1/10W	RM73B--333J
R873	247 0006 946	Carbon chip 390ohm 1/10W	RM73B--391J
R874	247 0007 987	Carbon chip 1.5kohm 1/10W	RM73B--152J
R875	247 0009 985	Carbon chip 10kohm 1/10W	RM73B--103J
R876	247 0011 957	Carbon chip 51kohm 1/10W	RM73B--513J
R877	247 0009 956	Carbon chip 7.5kohm 1/10W	RM73B--752J
R878	247 0009 985	Carbon chip 10kohm 1/10W	RM73B--103J
R879	247 0005 905	Carbon chip 100ohm 1/10W	RM73B--101J
R880	247 0009 969	Carbon chip 8.2kohm 1/10W	RM73B--822J
R881	247 0007 961	Carbon chip 1.2kohm 1/10W	RM73B--122J
R882	247 0011 944	Carbon chip 47kohm 1/10W	RM73B--473J
R883	247 0005 989	Carbon chip 220ohm 1/10W	RM73B--221J
R884	247 0009 969	Carbon chip 8.2kohm 1/10W	RM73B--822J
R885	247 0011 944	Carbon chip 47kohm 1/10W	RM73B--473J
R886	247 0010 961	Carbon chip 22kohm 1/10W	RM73B--223J
R887,888	247 0009 901	Carbon chip 4.7kohm 1/10W	RM73B--472J
R889	247 0007 945	Carbon chip 1kohm 1/10W	RM73B--102J
R890	247 0008 915	Carbon chip 2kohm 1/10W	RM73B--202J
R891	247 0005 905	Carbon chip 100ohm 1/10W	RM73B--101J
R892	247 0011 928	Carbon chip 39kohm 1/10W	RM73B--393J
R893	247 0008 915	Carbon chip 2kohm 1/10W	RM73B--202J
R894	247 0009 985	Carbon chip 10kohm 1/10W	RM73B--103J
R895	247 0009 930	Carbon chip 6.2kohm 1/10W	RM73B--622J
R896	247 0005 073	Carbon chip 200ohm 1/10W	RM73B--201J
R897	247 0007 945	Carbon chip 1kohm 1/10W	RM73B--102J
R898	247 0004 922	Carbon chip 47ohm 1/10W	RM73B--470J
R899	247 0012 972	Carbon chip 160kohm 1/10W	RM73B--164J
R900	247 0005 905	Carbon chip 100ohm 1/10W	RM73B--101J
R901~904	247 0009 985	Carbon chip 10kohm 1/10W	RM73B--103J
R905~908	247 0009 901	Carbon chip 4.7kohm 1/10W	RM73B--472J
R909	247 0009 985	Carbon chip 10kohm 1/10W	RM73B--103J
R910~912	247 0009 901	Carbon chip 4.7kohm 1/10W	RM73B--472J
R913~935	247 0009 985	Carbon chip 10kohm 1/10W	RM73B--103J
⚠R936	241 2387 940	Carbon film 4.7ohm 1/4W(NB)	RD14B2E4R7JNBS
R937,938	247 0007 945	Carbon chip 1kohm 1/10W	RM73B--102J
R939	247 0009 901	Carbon chip 4.7kohm 1/10W	RM73B--472J
R940	247 0007 945	Carbon chip 1kohm 1/10W	RM73B--102J
R941	247 0009 985	Carbon chip 10kohm 1/10W	RM73B--103J
R942	247 0009 901	Carbon chip 4.7kohm 1/10W	RM73B--472J
R943	247 0009 985	Carbon chip 10kohm 1/10W	RM73B--103J
R944	247 0013 900	Carbon chip 220kohm 1/10W	RM73B--224J

Ref. No.	Part No.	Part Name	Remarke
R945	247 0009 985	Carbon chip 10kohm 1/10W	RM73B--103J
R951	247 0009 985	Carbon chip 10kohm 1/10W	RM73B--103J
R952	247 0009 914	Carbon chip 5.1kohm 1/10W	RM73B--512J
R953	247 0009 985	Carbon chip 10kohm 1/10W	RM73B--103J
R955~957	247 0009 985	Carbon chip 10kohm 1/10W	RM73B--103J
R959	247 0009 985	Carbon chip 10kohm 1/10W	RM73B--103J
R960	247 0012 927	Carbon chip 100kohm 1/10W	RM73B--104J
⚠R963	241 2387 940	Carbon film 4.7ohm 1/4W(NB)	RD14B2E4R7JNBS
R965	247 0010 958	Carbon chip 20kohm 1/10W	RM73B--203J
R966	247 0009 985	Carbon chip 10kohm 1/10W	RM73B--103J
R976~980	247 0009 985	Carbon chip 10kohm 1/10W	RM73B--103J
R981,982	247 0005 905	Carbon chip 100ohm 1/10W	RM73B--101J
⚠R983,984	241 2387 908	Carbon film 1ohm 1/4W(NB)	RD14B2E010JNBS
R985	247 0002 966	Carbon chip 10ohm 1/10W	RM73B--100J
R987	247 0011 944	Carbon chip 47kohm 1/10W	RM73B--473J
R988	247 0009 985	Carbon chip 10kohm 1/10W	RM73B--103J
R989	247 0011 944	Carbon chip 47kohm 1/10W	RM73B--473J
R991	247 0009 985	Carbon chip 10kohm 1/10W	RM73B--103J
⚠R992	244 2043 953	Metal oxide 470ohm 1W	RS14B3A471JNBS(S)
R994	247 0005 905	Carbon chip 100ohm 1/10W	RM73B--101J

CAPACITORS GROUP

Ref. No.	Part No.	Part Name	Remarke
C754~759	254 4254 938	Electrolytic 47μF/16V	CE04W1C470M
C760~763	257 0012 966	Ceramic chip 0.01μF/50V	CK73F1H103Z
C764	254 4252 930	Electrolytic 100μF/10V	CE04W1A101M
C766,767	257 0012 966	Ceramic chip 0.01μF/50V	CK73F1H103Z
C768,769	254 4254 938	Electrolytic 47μF/16V	CE04W1C470M
C770	254 4252 930	Electrolytic 100μF/10V	CE04W1A101M
C772,773	257 0012 966	Ceramic chip 0.01μF/50V	CK73F1H103Z
C792~794	254 4260 948	Electrolytic 1μF/50V	CE04W1H010M
C804~807	257 0012 966	Ceramic chip 0.01μF/50V	CK73F1H103Z
C808~811	254 4254 938	Electrolytic 47μF/16V	CE04W1C470M
C812,813	257 0012 966	Ceramic chip 0.01μF/50V	CK73F1H103Z
C814	254 4252 930	Electrolytic 100μF/10V	CE04W1A101M
C816	254 4254 938	Electrolytic 47μF/16V	CE04W1C470M
C817	254 4252 930	Electrolytic 100μF/10V	CE04W1A101M
C819	254 4254 938	Electrolytic 47μF/16V	CE04W1C470M
C820~823	257 0012 966	Ceramic chip 0.01μF/50V	CK73F1H103Z
C824~827	254 4254 938	Electrolytic 47μF/16V	CE04W1C470M
C828,829	257 0012 966	Ceramic chip 0.01μF/50V	CK73F1H103Z
C830	254 4252 930	Electrolytic 100μF/10V	CE04W1A101M
C832	254 4254 938	Electrolytic 47μF/16V	CE04W1C470M
C833	254 4252 930	Electrolytic 100μF/10V	CE04W1A101M
C835	254 4254 938	Electrolytic 47μF/16V	CE04W1C470M
C836	254 4254 909	Electrolytic 10μF/16V	CE04W1C100M
C837	254 4254 938	Electrolytic 47μF/16V	CE04W1C470M
C838	257 0012 966	Ceramic chip 0.01μF/50V	CK73F1H103Z
C839	257 0002 947	Ceramic chip 12pF/50V	CC73SL1H120J
C840	257 0002 921	Ceramic chip 10pF/50V	CC73SL1H100D
C841	254 4254 938	Electrolytic 47μF/16V	CE04W1C470M
C842	257 0012 966	Ceramic chip 0.01μF/50V	CK73F1H103Z
C843~845	257 0003 946	Ceramic chip 33pF/50V	CC73SL1H330J
C846	257 0009 940	Ceramic chip 3300pF/50V	CK73B1H332K
C847	255 1265 978	Film 0.022μF/50V	CQ93M1H223J(B)
C848	257 0004 961	Ceramic chip 100pF/50V	CC73SL1H101J
C849	254 4260 977	Electrolytic 4.7μF/50V	CE04W1H4R7M
C850	254 4260 948	Electrolytic 1μF/50V	CE04W1H010M
C851	254 4254 909	Electrolytic 10μF/16V	CE04W1C100M
C852	257 0009 940	Ceramic chip 3300pF/50V	CK73B1H332K
C853	257 0008 941	Ceramic chip 470pF/50V	CK73B1H471K
C854	256 1034 953	Metallized 0.068μF/50V	CF93A1H683J
C855	254 4260 948	Electrolytic 1μF/50V	CE04W1H010M
C856	257 0005 902	Ceramic chip 150pF/50V	CC73SL1H151J
C857	255 1264 911	Film 1200pF/50V	CQ93M1H122J(B)
C858	257 0012 966	Ceramic chip 0.01μF/50V	CK73F1H103Z
C859	254 4252 930	Electrolytic 100μF/10V	CE04W1A101M
C860	255 1264 908	Film 1000pF/50V	CQ93M1H102J(B)
C861,862	254 4254 938	Electrolytic 47μF/16V	CE04W1C470M
C863	254 4252 930	Electrolytic 100μF/10V	CE04W1A101M
C864,865	256 1034 937	Metallized 0.047μF/50V	CF93A1H473J
C866	254 4260 948	Electrolytic 1μF/50V	CE04W1H010M
C867	256 1034 937	Metallized 0.047μF/50V	CF93A1H473J
C868,869	254 4254 909	Electrolytic 10μF/16V	CE04W1C100M
C890	257 0008 925	Ceramic chip 330pF/50V	CK73B1H331K
C891	257 0014 935	Ceramic chip 0.1μF/25V	CK73F1E104Z
C892,893	254 4260 948	Electrolytic 1μF/50V	CE04W1H010M
C894	254 4260 964	Electrolytic 3.3μF/50V	CE04W1H3R3M
C895	253 1181 904	Ceramic 0.01μF/50V	CK45F1H103Z
C901,902	257 0014 935	Ceramic chip 0.1μF/25V	CK73F1E104Z
C903	254 4250 783	Electrolytic 3300μF/6.3V	CE04W0J332MC
C904,905	257 0012 966	Ceramic chip 0.01μF/50V	CK73F1H103Z
C906	254 4258 905	Electrolytic 4.7μF/35V	CE04W1V4R7M
C907	256 1034 982	Metallized 0.12μF/50V	CF93A1H124J
C908	254 4250 932	Electrolytic 220μF/6.3V	CE04W0J221M
C923	254 4260 948	Electrolytic 1μF/50V	CE04W1H010M
C924	254 4258 947	Electrolytic 47μF/35V	CE04W1V470M
C937,938	255 4235 976	Film cap. 0.015μF/100V	CQ93P2A153J(NH)
C939	254 4259 700	Electrolytic 2200μF/35V	CE04W1V222MC
C940	254 4413 009	Electrolytic 2200μF/35V	CE04W1V222M(ARS)
C941	254 4259 700	Electrolytic 2200μF/35V	CE04W1V222MC
C942	254 4413 009	Electrolytic 2200μF/35V	CE04W1V222M(ARS)
C943~946	253 1181 904	Ceramic 0.01μF/50V	CK45F1H103Z
C947,948	254 4452 701	Electrolytic 47μF/16V	CE04W1V471MC(ASF)
C949,950	255 4235 976	Film cap. 0.015μF/100V	CQ93P2A153J(NH)
C951,952	254 4259 700	Electrolytic 2200μF/35V	CE04W1V222MC
C953,954	254 4261 743	Electrolytic 330μF/50V	CE04W1H331MC
C955,956	254 4260 948	Electrolytic 1μF/50V	CE04W1H010M
C957	253 1181 904	Ceramic 0.01μF/50V	CK45F1H103Z
C958	256 1034 979	Metallized 0.1μF/50V	CF93A1H104J

Ref. No.	Part No.	Part Name	Remarke
C971	256 1034 979	Metallized 0.1μF/50V	CF93A1H104J
C973,974	256 1034 979	Metallized 0.1μF/50V	CF93A1H104J
C990	253 1181 904	Ceramic 0.01μF/50V	CK45F1H103Z
C992	254 4254 938	Electrolytic 47μF/16V	CE04W1C470M
C993	254 4260 948	Electrolytic 1μF/50V	CE04W1H010M
C995	254 4254 909	Electrolytic 10μF/16V	CE04W1C100M
C996	254 4260 948	Electrolytic 1μF/50V	CE04W1H010M
C997	254 4252 930	Electrolytic 100μF/10V	CE04W1A101M
C998,999	257 0014 935	Ceramic chip 0.1μF/25V	CK73F1E104Z

OTHERS PARTS GROUP				Q'ty
	—	(P.W.board)		(1)
L801	235 0060 963	Inductor 15μH		1
LF901,902	235 0048 008	EMI filter		2
JK751,752	204 8515 005	4 P pin jack(S-GND)		2
JK753	204 8516 004	3 P pin jack(S-GND)		1
JK801~803	204 8415 008	3 P S-terminal(AU)	Gold flash	3
JK804	205 0906 000	1 P S-terminal(AU,SW)	Gold flash	1
JK805	204 8260 004	Mini jack		1
XL801	399 0153 006	Crystal 14.32MHz-12PF		1
XL802	399 0105 009	Resonator CSB503F2		1
XL901,902	399 0191 903	Resonator CST4.00MGW		2
⚠F014,015	206 1015 061	Fuse 2.0 A		2
	513 2585 032	Fuse label	for F014,015	2
	202 0040 909	Fuse clip		4
CN3A	205 0233 032	3 P EH connector base		1
CN5B,5C	205 0343 058	5 P connector base(KR-PH)		2
CN6B	205 0343 061	6 P connector base(KR-PH)		1
CN9B	205 0343 090	9 P connector base(KR-PH)		1
CN10A	205 0375 000	10 P connector base(KR-PH)		1
CN25A	205 0736 089	25 P FFC connector base		1
CN29A	205 0736 034	29 P FFC connector (9603)		1
CN37A	205 0736 092	37 P FFC connector base		1
CN8D,8E	205 0985 005	8 P connector socket(TKC-A)		2
CN8D,8E	205 0986 004	8 P connector plug(TKC-A)		2
CN5C	203 8456 006	5 P PH-SAN connector cord		1

1U-2873A POWER SUPPLY UNIT Ass'y

Ref. No.	Part No.	Part Name	Remarke
SEMICONDUCTORS GROUP			
IC001	268 0073 905	IC ICP-N15	IC protector
IC051	263 0990 009	IC :*OP275GP	
IC424	262 2214 007	IC LC7536	
IC425	263 0565 007	IC BA15218	
IC427	263 0565 007	IC BA15218	
IC651	263 0990 009	IC :*OP275GP	
IC969	263 0793 002	IC NJM7806FA(S)	Regulator +6V
IC970	263 0683 002	IC NJM7906FA(S)	Regulator -6V
IC971	263 0793 002	IC NJM7806FA(S)	Regulator +6V
IC972	263 0683 002	IC NJM7906FA(S)	Regulator -6V
IC973	263 0793 002	IC NJM7806FA(S)	Regulator +6V
TR051,052	275 0061 902	FET 2SK184(GR)/(BL)	N type FET
TR055	269 0020 906	Transistor DTC114ES	Built in resistor
TR056	269 0046 003	Transistor DTA114ES	Built in resistor
TR412	273 0388 906	Transistor 2SC1740S(E)	
TR651~656	273 0253 015	Transistor 2SC2878(A/B)	
TR657~660	273 0388 906	Transistor 2SC1740S(E)	
TR965,966	273 0388 906	Transistor 2SC1740S(E)	
TR967	269 0020 906	Transistor DTC114ES	Built in resistor
TR968	269 0046 003	Transistor DTA114ES	Built in resistor
D051,052	276 0432 903	Diode 1SS270A	
D408	276 0432 903	Diode 1SS270A	
D651~654	276 0432 903	Diode 1SS270A	
⚠D961	276 0424 005	Diode 4D4B42(LC1)	Bridge
D968~971	276 0548 910	Diode DSM1D2	type-3
D972~977	276 0553 905	Diode 1SR35-200A	
D978	276 0432 903	Diode 1SS270A	
ZD964	276 0644 911	Zener diode MTZJ7.5A	7.5V
ZD965	276 0637 902	Zener diode MTZJ6.2A	6.2V

Ref. No.	Part No.	Part Name	Remarke
RESISTORS GROUP			
VR651	211 0860 002	Variable resistor 30kohm	
VR652	211 0860 015	Variable resistor 5kohm	
⚠R027	241 2379 974	Carbon film 910ohm 1/4W(NB)	RD14B2E911JNBS
R651~656	241 2420 988	Carbon film 220ohm 1/4W	RD14B2E221J(PSNB)
⚠R663~666	241 2379 974	Carbon film 910ohm 1/4W(NB)	RD14B2E911JNBS
⚠R973	241 2375 978	Carbon film 20ohm 1/4W(NB)	RD14B2E200JNBS
R996~999	241 2420 988	Carbon film 220ohm 1/4W	RD14B2E221J(PSNB)
CAPACITORS GROUP			
C001,002	253 1181 917	Ceramic 0.022μF/50V	CK45F1H223Z
C003,004	254 4260 948	Electrolytic 1μF/50V	CE04W1H010M
C005~008	254 4254 909	Electrolytic 10μF/16V	CE04W1C100M
C009,010	254 4260 948	Electrolytic 1μF/50V	CE04W1H010M
C011~014	254 4254 909	Electrolytic 10μF/16V	CE04W1C100M
C015,016	253 1179 903	Ceramic 100pF/50V	CK45B1H101K
C017	254 4260 948	Electrolytic 1μF/50V	CE04W1H010M
C018,019	253 1181 904	Ceramic 0.01μF/50V	CK45F1H103Z
C062	254 4356 001	Electrolytic 10μF/50V	CE04W1H100(ARS)
C065~067	254 4356 001	Electrolytic 10μF/50V	CE04W1H100(ARS)
C071,072	254 4254 938	Electrolytic 47μF/16V	CE04W1C470M
C075,076	255 1264 908	Film 1000pF/50V	CQ93M1H102J(B)
C077,078	256 1035 907	Metalized 0.18μF/50V	CF93A1H184J
C079,080	254 4260 948	Electrolytic 1μF/50V	CE04W1H010M
C081	255 1265 949	Film 0.012μF/50V	CQ93M1H123J(B)
C083	256 1034 966	Metalized 0.082μF/50V	CF93A1H823J
C085	254 4260 935	Electrolytic 0.47μF/50V	CE04W1HR47M
C087,088	254 4356 739	Electrolytic 47μF/50V	CE04W1H470MC(ARS)
C091~093	255 1264 937	Film 1800pF/50V	CQ93M1H182J(B)
C357	254 4260 948	Electrolytic 1μF/50V	CE04W1H010M
C651~656	255 6177 948	Film 100pF/50V	CQ09S1H101J(SMT)
C657~662	254 4356 001	Electrolytic 10μF/50V	CE04W1H100(ARS)
C663	254 4260 948	Electrolytic 1μF/50V	CE04W1H010M
C664	253 1181 904	Ceramic 0.01μF/50V	CK45F1H103Z
C665,666	254 4356 001	Electrolytic 10μF/50V	CE04W1H100(ARS)
C671,672	254 4254 938	Electrolytic 47μF/16V	CE04W1C470M
C675,676	255 1264 908	Film 1000pF/50V	CQ93M1H102J(B)
C677,678	256 1035 907	Metalized 0.18μF/50V	CF93A1H184J
C679,680	254 4260 948	Electrolytic 1μF/50V	CE04W1H010M
C681,682	255 1265 949	Film 0.012μF/50V	CQ93M1H123J(B)
C683,684	256 1034 966	Metalized 0.082μF/50V	CF93A1H823J
C685,686	254 4260 935	Electrolytic 0.47μF/50V	CE04W1HR47M
C687,688	254 4356 739	Electrolytic 47μF/50V	CE04W1H470MC(ARS)

Ref. No.	Part No.	Part Name	Remarke
C690,691	253 1181 904	Ceramic 0.01μF/50V	CK45F1H103Z
C921	255 4232 982	Film cap. 0.0022μF/100V	CQ93P2A222J(NH)
C922	254 4416 705	Electrolytic 10000μF/25V	CE04W1E103MC
C961,962	253 1181 904	Ceramic 0.01μF/50V	CK45F1H103Z
C963,964	254 4257 702	Electrolytic 3300μF/25V	CE04W1E332MC
C965~972	253 1181 904	Ceramic 0.01μF/50V	CK45F1H103Z
⚠C977	253 8014 702	Ceramic 0.01μF/400V(AC)	CK45F2GAC103MC
C978,979	253 1181 904	Ceramic 0.01μF/50V	CK45F1H103Z
C980	254 4260 948	Electrolytic 1μF/50V	CE04W1H010M
C981	254 4256 790	Electrolytic 2200μF/25V	CE04W1E222MC
C982	254 4254 909	Electrolytic 10μF/16V	CE04W1C100M
C983	253 1181 904	Ceramic 0.01μF/50V	CK45F1H103Z
C984	254 4260 948	Electrolytic 1μF/50V	CE04W1H010M
C986~989	254 4258 947	Electrolytic 47μF/35V	CE04W1V470M
C991	255 4235 743	Film cap. 0.022μF/100V	CQ93P2A223J(NH)
C992	255 4232 982	Film cap. 0.0022μF/100V	CQ93P2A222J(NH)

OTHERS PARTS GROUP				Q'ty
	—	(P.W.board)		(1)
⚠F001	206 1015 016	Fuse 1.25 A		1
⚠F008	206 1015 029	Fuse 1 A (T)		1
⚠F011	206 1015 087	Fuse 4.0 A		1
⚠F012,013	206 1015 058	Fuse 1.6 A		2
	513 2585 003	Fuse label	for F008	1
	513 2585 016	Fuse label	for F001	1
	513 2585 029	Fuse label	for F012,013	2
	513 2585 058	Fuse label	for F011	1
	202 0040 909	Fuse clip		10
RL404	214 0127 003	Relay (RY-12W)		1
RL651~654	214 0127 003	Relay (RY-12W)		4
⚠RL961	214 0188 000	Relay (VS-12MBNR-SM2(TV-8))		
⚠PT961	233 6074 009	Power transformer (mini)		1
JK651,652	204 8514 006	4 P pin jack(S-GND)		2
JK961,962	204 8289 001	DC power jack		2
CN2A	205 0581 056	2 P VH connector base		1
CN2B	205 0581 001	2 P VH connector base		1
CN7A	205 0343 074	7 P connector base(KR-PH)		1
CN8A,8F	205 0343 087	8 P connector base(KR-PH)		2

Ref. No.	Part No.	Part Name	Remarke	Q'ty
CN10A	205 0375 000	10 P connector base(KR-PH)		1
CN12D	205 0535 028	12 P connector base		1
CN6A	205 0696 064	JL connector(BT-E)		1
CN3A	205 0233 032	3 P EH connector base		1
	203 0647 017	1 P SIN cord Ass'y		1
	415 0299 000	Capacitor cover		1
	417 0388 043	Radiator	for IC969~972	2
	417 0253 026	Radiator	for IC973	1
	473 3304 015	Bind screw 3x8		5

1U-2874A DISPLAY UNIT Ass'y

Ref. No.	Part No.	Part Name	Remarke
SEMICONDUCTORS GROUP			
IC101	262 1911 000	IC M66313FP	
IC102	262 2035 008	IC MSC1937-03RS	
IC103	499 0150 008	Remocon sensor SBX1610-52	
IC404	262 1853 100	IC NJU7313AL	
IC426	263 0995 004	IC NJM4556AD	
IC451	263 0609 002	IC NJM2068DDC	
IC652	263 0609 002	IC NJM2068DDC	
IC701	263 0609 002	IC NJM2068DDC	
TR101~103	272 0131 901	Transistor 2SB1041(R)	
TR104~113	269 0020 906	Transistor DTC114ES	Built in resistor
TR114	269 0046 003	Transistor DTA114ES	Built in resistor
TR407	273 0388 906	Transistor 2SC1740S(E)	
D407	276 0432 903	Diode 1SS270A	
ZD101~104	276 0637 902	Zener diode MTZJ6.2A	6.2V
LD101~106	393 9434 906	LED SEL1210S	Red
LD107,108	393 9408 903	LED SEL4214S	Red
LD109,110	393 9408 916	LED SEL4414E	Green
LD111,112	393 9408 903	LED SEL4214S	Red
LD124	393 9549 008	LED LB-303VA	
RESISTORS GROUP			
⚠R605,606	244 2051 961	Metal oxide 100ohm 1W	RS14B3A101JNBS(S)
⚠R617	241 2379 974	Carbon film 910ohm 1/4W(NB)	RD14B2E911JNBS
CAPACITORS GROUP			
C101	254 4252 066	Electrolytic 470μF/10V	CE04W1A471M
C102	253 9036 006	BC ceramic 0.1μF/25V	CK45=1E104Z
C103	254 4261 028	Electrolytic 100μF/50V	CE04W1H101M
C104	253 1181 904	Ceramic 0.01μF/50V	CK45F1H103Z
C105	254 4250 945	Electrolytic 330μF/6.3V	CE04W0J331M
C106	253 1179 903	Ceramic 100pF/50V	CK45B1H101K
C107~110	253 1181 904	Ceramic 0.01μF/50V	CK45F1H103Z
C111	253 1180 921	Ceramic 1000pF/50V	CK45B1H102K
C112	253 1181 904	Ceramic 0.01μF/50V	CK45F1H103Z
C120	253 1180 921	Ceramic 1000pF/50V	CK45B1H102K
C421,422	254 4254 909	Electrolytic 10μF/16V	CE04W1C100M
C441,442	253 1179 903	Ceramic 100pF/50V	CK45B1H101K

1U-2875A DIGITAL UNIT Ass'y

Ref. No.	Part No.	Part Name	Remarke
C513,514	254 4260 948	Electrolytic 1μF/50V	CE04W1H010M
C515~518	254 4254 909	Electrolytic 10μF/16V	CE04W1C100M
C519,520	253 1179 903	Ceramic 100pF/50V	CK45B1H101K
C529,530	253 9030 086	BC ceramic 0.022μF/25V	CK45=1E223K
C571,572	254 4254 035	Electrolytic 47μF/16V	CE04W1C470M
C591,592	254 4260 948	Electrolytic 1μF/50V	CE04W1H010M
C693,694	254 4260 948	Electrolytic 1μF/50V	CE04W1H010M
C695	253 1179 903	Ceramic 100pF/50V	CK45B1H101K
C697	254 4254 909	Electrolytic 10μF/16V	CE04W1C100M
C699	254 4254 909	Electrolytic 10μF/16V	CE04W1C100M
C705	253 9036 006	BC ceramic 0.1μF/25V	CK45=1E104Z
C706	254 4260 948	Electrolytic 1μF/50V	CE04W1H010M
C753,754	254 4254 909	Electrolytic 10μF/16V	CE04W1C100M
C755,756	253 1179 903	Ceramic 100pF/50V	CK45B1H101K
C757,758	254 4254 035	Electrolytic 47μF/16V	CE04W1C470M
C759,760	254 4260 948	Electrolytic 1μF/50V	CE04W1H010M
OTHERS PARTS GROUP			**Q'ty**
	—	(P.W.board)	(1)
L101	235 0060 989	Inductor 120μH	1
S101~119	212 5604 910	Tact switch	19
S120,121	212 0373 000	Rotary encorder-EC16B	2
FL101	393 4156 001	FLD FIP16FM7R	1
JK701	204 8517 003	1 P pin jack(S-GND)	1
JK702	204 9529 004	4 P pin jack(SW)	1
JK711	204 8217 031	Headphone jack (BL(AU))	1
RL403	214 0127 003	Relay (RY-12W)	1
CN3B	205 0343 032	3 P connector base(KR-PH)	1
CN14A	205 0375 042	14 P connector base(KR-PH)	1
CN6B	205 0355 062	6 P KR connector base(L)	1
CN9C	205 0343 090	9 P connector base(KR-PH)	1
CN12C	205 0480 021	12 P KR connector base(L)	1
CN15A	205 0375 055	15 P connector base(KR-PH)	1
CN29A	205 0702 042	29 P FFC connector base(L)	1
CN10E	205 0985 018	10 P connector socket(TKC-A)	1
CN10E	205 0986 017	10 P connector PLUG(TKC-A)	1
CN15A	204 6335 025	15 P KR-DA connector cord	1
CN1A	203 0648 003	1 P SIN cord Ass'y	1
	203 0526 044	1 P contact Ass'y	1

Ref. No.	Part No.	Part Name	Remarke
SEMICONDUCTORS GROUP			
IC101~105	263 0809 006	IC NJM7805FA(S)	Regulator +5V
IC106	263 0554 005	IC NJM7905FA(S)	Regulator -5V
IC107	263 0809 006	IC NJM7805FA(S)	Regulator +5V
IC108	263 0554 005	IC NJM7905FA(S)	Regulator -5V
IC171	262 2208 000	IC PCM1760P-L	
IC172	262 2209 009	IC DF1760P	
IC173	399 0300 008	IC SG-531PH(12.288 MHz)	
IC201~204	262 1837 032	IC PCM1702P-L	
IC205~207	263 0680 005	IC NJM5532DD	
IC208~210	263 0594 007	IC NJM2068DAC	
IC211~213	262 2210 904	IC SM5841HS	
IC214	262 2145 008	IC PCM69AP	
IC721	262 2031 002	IC TC9299P	
IC722	263 0594 007	IC NJM2068DAC	
TR005	272 0131 901	Transistor 2SB1041(R)	
TR008	272 0131 901	Transistor 2SB1041(R)	
TR009	274 0169 908	Transistor 2SD1292(R)	
TR010	273 0384 900	Transistor 2SC2412K(S)	
TR013	271 0238 908	Transistor 2SA1037K(S/R)	
TR014	273 0384 900	Transistor 2SC2412K(S)	
TR201~204	275 0094 908	FET 2SK209(GR)	N type FET
TR210	269 0047 905	Transistor DTA143EK	Built in resistor
TR211	269 0054 901	Transistor DTC144EK	Built in resistor
TR215~220	273 0253 918	Transistor 2SC2878(A/B)	
TR221	269 0083 901	Transistor DTA114EK	Built in resistor
D004,005	276 0432 903	Diode 1SS270A	
D101~104	276 0432 903	Diode 1SS270A	
D201,202	276 0432 903	Diode 1SS270A	
D208	276 0432 903	Diode 1SS270A	
RESISTORS GROUP			
R008	247 0009 985	Carbon chip 10kohm 1/10W	RM73B--103J
R009	247 0009 969	Carbon chip 8.2kohm 1/10W	RM73B--822J
R010,011	247 0009 985	Carbon chip 10kohm 1/10W	RM73B--103J
R021	247 0009 985	Carbon chip 10kohm 1/10W	RM73B--103J
R022	247 0012 927	Carbon chip 100kohm 1/10W	RM73B--104J
R023~028	247 0009 985	Carbon chip 10kohm 1/10W	RM73B--103J
R185~187	247 0005 905	Carbon chip 100ohm 1/10W	RM73B--101J

Ref. No.	Part No.	Part Name	Remarke
R188	247 1018 904	Carbon chip 0ohm 1/8W	RM73B2B0R0K
R201~203	247 0006 920	Carbon chip 330ohm 1/10W	RM73B--331J
R205	247 0006 920	Carbon chip 330ohm 1/10W	RM73B--331J
R207,208	241 2424 939	Carbon film 6.2kohm 1/4W	RD14B2E622J(PSNB)
R217~219	247 0006 920	Carbon chip 330ohm 1/10W	RM73B--331J
R221	247 0006 920	Carbon chip 330ohm 1/10W	RM73B--331J
R233,234	247 0006 920	Carbon chip 330ohm 1/10W	RM73B--331J
R263~265	247 0006 920	Carbon chip 330ohm 1/10W	RM73B--331J
R267,268	241 2423 079	Carbon film 3.6kohm 1/4W	RD14B2E362J(PSNB)
R273,274	247 0011 944	Carbon chip 47kohm 1/10W	RM73B--473J
R277,278	247 0011 944	Carbon chip 47kohm 1/10W	RM73B--473J
R293~298	247 0008 960	Carbon chip 3.3kohm 1/10W	RM73B--332J
R299	247 0010 958	Carbon chip 20kohm 1/10W	RM73B--203J
R300,301	247 0018 905	Carbon chip 0ohm 1/10W	RM73B--0R0K
CAPACITORS GROUP			
C101	253 1181 904	Ceramic 0.01μF/50V	CK45F1H103Z
C102,103	254 4260 948	Electrolytic 1μF/50V	CE04W1H010M
C104,105	253 1181 904	Ceramic 0.01μF/50V	CK45F1H103Z
C106,107	254 4260 948	Electrolytic 1μF/50V	CE04W1H010M
C108,109	253 1181 904	Ceramic 0.01μF/50V	CK45F1H103Z
C110,111	254 4260 948	Electrolytic 1μF/50V	CE04W1H010M
C112,113	253 1181 904	Ceramic 0.01μF/50V	CK45F1H103Z
C114,115	254 4260 948	Electrolytic 1μF/50V	CE04W1H010M
C116~118	253 1181 904	Ceramic 0.01μF/50V	CK45F1H103Z
C119~122	254 4260 948	Electrolytic 1μF/50V	CE04W1H010M
C129~133	253 1181 904	Ceramic 0.01μF/50V	CK45F1H103Z
C134,135	254 4260 948	Electrolytic 1μF/50V	CE04W1H010M
C136,137	253 1181 904	Ceramic 0.01μF/50V	CK45F1H103Z
C138,139	254 4260 948	Electrolytic 1μF/50V	CE04W1H010M
C140	253 1181 904	Ceramic 0.01μF/50V	CK45F1H103Z
C145,146	253 1181 904	Ceramic 0.01μF/50V	CK45F1H103Z
C171~174	255 1264 911	Film 1200pF/50V	CQ93M1H122J(B)
C175,176	255 4200 985	Film 220pF/50V	CQ93P1H221J
C177~180	255 1264 911	Film 1200pF/50V	CQ93M1H122J(B)
C181,182	254 4254 909	Electrolytic 10μF/16V	CE04W1C100M
C183,184	253 9036 006	BC ceramic 0.1μF/25V	CK45=1E104Z
C185,186	254 4254 909	Electrolytic 10μF/16V	CE04W1C100M
C187,188	253 9036 006	BC ceramic 0.1μF/25V	CK45=1E104Z
C189~192	254 4254 909	Electrolytic 10μF/16V	CE04W1C100M
C193	253 9036 006	BC ceramic 0.1μF/25V	CK45=1E104Z
C194	254 4254 909	Electrolytic 10μF/16V	CE04W1C100M
C195,196	253 9036 006	BC ceramic 0.1μF/25V	CK45=1E104Z
C197	254 4254 909	Electrolytic 10μF/16V	CE04W1C100M
C201~204	254 4260 977	Electrolytic 4.7μF/50V	CE04W1H4R7M
C205,206	254 4254 019	Electrolytic 22μF/16V	CE04W1C220M

Ref. No.	Part No.	Part Name	Remarke
C207,208	254 4252 037	Electrolytic 100μF/10V	CE04W1A101M
C209,210	254 4356 739	Electrolytic 47μF/50V	CE04W1H470MC(ARS)
C211~214	254 4356 001	Electrolytic 10μF/50V	CE04W1H100(ARS)
C215,216	255 4201 926	Film 330pF/50V	CQ93P1H331J
C217,218	255 4202 925	Film 820pF/50V	CQ93P1H821J
C219	254 4356 001	Electrolytic 10μF/50V	CE04W1H100(ARS)
C221	254 4356 001	Electrolytic 10μF/50V	CE04W1H100(ARS)
C223,224	254 4356 739	Electrolytic 47μF/50V	CE04W1H470MC(ARS)
C225,226	255 1265 004	Film 6800pF/50V	CQ93M1H682J(B)
C227~230	254 4260 977	Electrolytic 4.7μF/50V	CE04W1H4R7M
C231,232	254 4254 019	Electrolytic 22μF/16V	CE04W1C220M
C233,234	254 4252 037	Electrolytic 100μF/10V	CE04W1A101M
C235,236	254 4254 035	Electrolytic 47μF/16V	CE04W1C470M
C237~240	254 4260 977	Electrolytic 4.7μF/50V	CE04W1H4R7M
C241,242	255 4200 901	Film 100pF/50V	CQ93P1H101J
C243	255 4201 926	Film 330pF/50V	CQ93P1H331J
C244	256 1034 937	Metalized 0.047μF/50V	CF93A1H473J
C245	255 4202 925	Film 820pF/50V	CQ93P1H821J
C246	256 1034 979	Metalized 0.1μF/50V	CF93A1H104J
C247~250	254 4260 948	Electrolytic 1μF/50V	CE04W1H010M
C251,252	254 4254 909	Electrolytic 10μF/16V	CE04W1C100M
C253,254	255 1265 004	Film 6800pF/50V	CQ93M1H682J(B)
C255,256	254 4252 037	Electrolytic 100μF/10V	CE04W1A101M
C257~260	255 4200 901	Film 100pF/50V	CQ93P1H101J
C261,262	255 4201 926	Film 330pF/50V	CQ93P1H331J
C263	254 4260 948	Electrolytic 1μF/50V	CE04W1H010M
C264	253 1181 904	Ceramic 0.01μF/50V	CK45F1H103Z
C265	254 4260 948	Electrolytic 1μF/50V	CE04W1H010M
C266	253 1181 904	Ceramic 0.01μF/50V	CK45F1H103Z
C267,268	254 4254 909	Electrolytic 10μF/16V	CE04W1C100M
C269,270	255 4202 925	Film 820pF/50V	CQ93P1H821J
C271,272	255 1265 004	Film 6800pF/50V	CQ93M1H682J(B)
C273	254 4254 909	Electrolytic 10μF/16V	CE04W1C100M
C274	253 1181 904	Ceramic 0.01μF/50V	CK45F1H103Z
C275	254 4254 909	Electrolytic 10μF/16V	CE04W1C100M
C276	253 1181 904	Ceramic 0.01μF/50V	CK45F1H103Z
C277	254 4254 909	Electrolytic 10μF/16V	CE04W1C100M
C278,279	253 1181 904	Ceramic 0.01μF/50V	CK45F1H103Z
C280	254 4254 909	Electrolytic 10μF/16V	CE04W1C100M
C281,282	254 4252 037	Electrolytic 100μF/10V	CE04W1A101M
C283	254 4254 909	Electrolytic 10μF/16V	CE04W1C100M
C284	257 0008 983	Ceramic chip 1000pF/50V	CK73B1H102K
C285,286	255 4235 918	Film 100pF/100V	CQ93P2A101J(NH)
C291,292	254 4254 909	Electrolytic 10μF/16V	CE04W1C100M
C301~308	257 0012 966	Ceramic chip 0.01μF/50V	CK73F1H103Z
C310~312	257 0012 966	Ceramic chip 0.01μF/50V	CK73F1H103Z
C314,315	257 0012 966	Ceramic chip 0.01μF/50V	CK73F1H103Z
C316	257 0008 983	Ceramic chip 100pF/50V	CK73B1H102K
C317	257 0012 966	Ceramic chip 0.01μF/50V	CK73F1H103Z
C318	256 1034 979	Metalized 0.1μF/50V	CF93A1H104J

1U-2928A DSP UNIT Ass'y

Ref. No.	Part No.	Part Name	Remarke
C319,320	253 1181 904	Ceramic 0.01μF/50V	CK45F1H103Z
C321	257 0004 961	Ceramic chip 100pF/50V	CC73SL1H101J
C723,724	254 4260 948	Electrolytic 1μF/50V	CE04W1H010M
C725,726	254 4254 909	Electrolytic 10μF/16V	CE04W1C100M
C727,728	253 4537 966	Ceramic 47pF/50V	CC45SL1H470J
C729~732	254 4252 930	Electrolytic 100μF/10V	CE04W1A101M

OTHERS PARTS GROUP				Q'ty
	—	(P.W.board)		(1)
L173	235 0060 918	Inductor 4.7μH		1
L207	235 0060 918	Inductor 4.7μH		1
CN9B	205 0343 090	9 P connector base(KR-PH)		1
CN15B	205 0375 055	15 P connector base(KR-PH)		1
CN14A	205 0985 021	14 P connector socket(TKC-A)		1
CN8G,H	205 0985 005	8 P connector socket (TKC-A)		2
E	205 1005 007	1 P terminal		1
F	203 0647 004	1 P SIN cord Ass'y		1
	203 0648 003	1 P SIN cord Ass'y		2
	417 0532 006	Radiator	for IC102,103, 107,108	2
	473 7002 018	Tapping screw 3x8 (S)		4

Ref. No.	Part No.	Part Name	Remarke
SEMICONDUCTORS GROUP			
IC001	262 2204 004	IC ZR38500	
IC002	262 2205 003	IC DSP56004	
IC003	399 0299 009	IC SG-531PH(33 MHz)	
IC004	262 1673 908	TC74HC04FP	
IC005	269 0097 007	IC GP1F32R	Optical input
IC006	262 1640 902	IC HD74HC14FP	
IC007,008	262 2206 002	IC TC514256BZL-60	
IC009	262 1718 902	IC TC74HC00AF	
IC010,011	269 0097 007	IC GP1F32R	Optical input
IC012	269 0098 006	IC GP1F32T	Optical output
IC013	262 1205 907	IC TC74HCU04AF	
IC014,015	262 2213 901	IC TC74HC151AF	
IC016	262 1638 901	IC TC74HC164AF	
IC017	262 1665 903	IC HD74HC74FP	
IC018	262 2217 004	IC TC74HC7266AF	
IC019	262 1638 901	IC TC74HC164AF	
IC020	262 1673 908	IC HD74HC04FP	
IC021	263 1018 003	IC MC14577CP	
IC022	263 0118 014	IC NJM4560DD	
IC023	263 1019 002	IC MAX903CPA	
IC024	262 1205 907	IC TC74HCU04AF	
IC025	263 0118 014	IC NJM4560DD	
IC026	262 2211 000	IC PD4606A	
IC027	399 0298 000	IC SG-531PH(46.08 MHz)	
IC028	262 2207 004	IC TC55329AJ-35	
IC029	262 1665 903	IC HD74HC74FP	
IC030	262 1641 901	IC HD74HC157FP	
IC031	262 2212 902	IC CS8412CS	
IC032	262 1718 902	IC TC74HC00AF	
IC033	262 1348 903	IC TC74HC123AF	
IC034,035	262 2207 001	IC TC55329AJ-35	
IC037	262 1205 907	IC TC74HCU04AF	
TR001	273 0384 900	Transistor 2SC2412K(S)	
TR002	269 0119 901	Transistor DTA124EK	Built in resistor
TR003	273 0384 900	Transistor 2SC2412K(S)	
TR004	271 0238 908	Transistor 2SA1037K(S/R)	
TR006	272 0131 901	Transistor 2SB1041(R)	
TR007	274 0169 908	Transistor 2SD1292(R)	
TR011	271 0238 908	Transistor 2SA1037K(S/R)	
TR012	273 0384 900	Transistor 2SC2412K(S)	
D001~003	276 0438 910	Diode MA151A	
CD001	276 0663 905	Varipico KV1851-TL	
LF101	261 0149 003	Composite SBP-4930	

Ref. No.	Part No.	Part Name	Remarke
RESISTORS GROUP (Not included carbon film ±5% 1/4W)			
VR001	211 6093 996	Semi fixed resistor 2.2kohm	V06PB222
R001~003	247 0009 901	Carbon chip 4.7kohm 1/10W	RM73B--472J
R004	247 0014 967	Carbon chip 1 Mohm 1/10W	RM73B--105J
R005~007	247 0009 985	Carbon chip 10kohm 1/10W	RM73B--103J
R012	247 0009 985	Carbon chip 10kohm 1/10W	RM73B--103J
R013	247 0012 927	Carbon chip 100kohm 1/10W	RM73B--104J
R014~017	247 0009 985	Carbon chip 10kohm 1/10W	RM73B--103J
R018	247 0009 901	Carbon chip 4.7kohm 1/10W	RM73B--472J
R020	247 0004 922	Carbon chip 47ohm 1/10W	RM73B--470J
R031	247 0006 904	Carbon chip 270ohm 1/10W	RM73B--271J
R032~037	247 0018 905	Carbon chip 0ohm 1/10W	RM73B--0R0K
R039	247 0018 905	Carbon chip 0ohm 1/10W	RM73B--0R0K
R040	247 0004 922	Carbon chip 47ohm 1/10W	RM73B--470J
R041	247 0018 905	Carbon chip 0ohm 1/10W	RM73B--0R0K
R044,045	247 0004 922	Carbon chip 47ohm 1/10W	RM73B--470J
R046~048	247 0018 905	Carbon chip 0ohm 1/10W	RM73B--0R0K
R052	247 0007 945	Carbon chip 1kohm 1/10W	RM73B--102J
R053~057	247 0004 922	Carbon chip 47ohm 1/10W	RM73B--470J
R059,060	247 0004 922	Carbon chip 47ohm 1/10W	RM73B--470J
R061~064	247 0018 905	Carbon chip 0ohm 1/10W	RM73B--0R0K
⚠R071	244 2043 953	Metal oxide 470ohm 1W	RS14B3A471JNB(S)
R091	247 0004 922	Carbon chip 47ohm 1/10W	RM73B--470J
R094,095	247 0004 977	Carbon chip 75ohm 1/10W	RM73B--750J
R096,097	247 0005 905	Carbon chip 100ohm 1/10W	RM73B--101J
R098,099	247 0008 928	Carbon chip 2.2kohm 1/10W	RM73B--222J
R100,101	247 0011 944	Carbon chip 47kohm 1/10W	RM73B--473J
R105	247 0006 975	Carbon chip 510ohm 1/10W	RM73B--510J
R106	247 0004 980	Carbon chip 82ohm 1/10W	RM73B--820J
R107~109	247 0009 985	Carbon chip 10kohm 1/10W	RM73B--103J
R110,111	247 0007 945	Carbon chip 1kohm 1/10W	RM73B--102J
R112	247 0009 901	Carbon chip 4.7kohm 1/10W	RM73B--472J
R113	247 0007 945	Carbon chip 1kohm 1/10W	RM73B--102J
R114	247 0005 947	Carbon chip 150ohm 1/10W	RM73B--151J
R115	247 0008 928	Carbon chip 2.2kohm 1/10W	RM73B--222J
R116	247 0006 920	Carbon chip 330ohm 1/10W	RM73B--331J
R117	247 0007 945	Carbon chip 1kohm 1/10W	RM73B--102J
R118	247 0009 985	Carbon chip 10kohm 1/10W	RM73B--103J
R119,120	247 0007 945	Carbon chip 1kohm 1/10W	RM73B--102J
R121	247 0009 985	Carbon chip 10kohm 1/10W	RM73B--103J
R122,123	247 0007 945	Carbon chip 1kohm 1/10W	RM73B--102J
R124	247 0009 985	Carbon chip 10kohm 1/10W	RM73B--103J
R125,126	247 0007 945	Carbon chip 1kohm 1/10W	RM73B--102J
R127	247 0011 986	Carbon chip 68kohm 1/10W	RM73B--683J
R128	247 0008 928	Carbon chip 2.2kohm 1/10W	RM73B--222J
R130	247 0008 928	Carbon chip 2.2kohm 1/10W	RM73B--222J
R131	247 0005 905	Carbon chip 100ohm 1/10W	RM73B--101J
R132	247 0009 956	Carbon chip 7.5kohm 1/10W	RM73B--752J
R133,134	247 0013 900	Carbon chip 220kohm 1/10W	RM73B--224J

Ref. No.	Part No.	Part Name	Remarke
R135,136	247 0009 985	Carbon chip 10kohm 1/10W	RM73B--103J
R137	247 0004 964	Carbon chip 68ohm 1/10W	RM73B--680J
R138	247 0012 927	Carbon chip 100kohm 1/10W	RM73B--104J
R140	247 0013 900	Carbon chip 220kohm 1/10W	RM73B--224J
R141	247 0009 985	Carbon chip 10kohm 1/10W	RM73B--103J
R142	247 0012 927	Carbon chip 100kohm 1/10W	RM73B--104J
R143	247 0009 985	Carbon chip 10kohm 1/10W	RM73B--103J
R144	247 0005 921	Carbon chip 120ohm 1/10W	RM73B--121J
R145	247 0011 944	Carbon chip 47kohm 1/10W	RM73B--473J
R146	247 0010 961	Carbon chip 22kohm 1/10W	RM73B--223J
R147	247 0007 945	Carbon chip 1kohm 1/10W	RM73B--102J
R149~151	247 0009 985	Carbon chip 10kohm 1/10W	RM73B--103J
R152	247 0007 945	Carbon chip 1kohm 1/10W	RM73B--102J
R153	247 0006 962	Carbon chip 470ohm 1/10W	RM73B--471J
R154,155	247 0011 944	Carbon chip 47kohm 1/10W	RM73B--473J
R160,161	247 0009 985	Carbon chip 10kohm 1/10W	RM73B--103J
R163	247 0007 945	Carbon chip 1kohm 1/10W	RM73B--102J
R164	247 0012 927	Carbon chip 100kohm 1/10W	RM73B--104J
R169	247 0009 901	Carbon chip 4.7kohm 1/10W	RM73B--472J
R171	247 0018 905	Carbon chip 0ohm 1/10W	RM73B--0R0K
R190	247 0010 929	Carbon chip 15kohm 1/10W	RM73B--153J
R198	247 0004 922	Carbon chip 47ohm 1/10W	RM73B--470J
R199	247 0018 905	Carbon chip 0ohm 1/10W	RM73B--0R0K
R293	247 0011 944	Carbon chip 47kohm 1/10W	RM73B--473J
R294	247 0005 905	Carbon chip 100ohm 1/10W	RM73B--101J
(C802)	247 0018 905	Carbon chip 0ohm 1/10W	RM73B--0R0K
CAPACITORS GROUP			
C001~005	257 0014 935	Ceramic chip 0.1μF/25V	CK73F1E104Z
C006~008	254 4254 035	Electrolytic 47μF/16V	CE04W1C470M
C009~026	257 0014 935	Ceramic chip 0.1μF/25V	CK73F1E104Z
C027,028	257 0012 966	Ceramic chip 0.01μF/50V	CK73F1H103Z
C030~036	257 0014 935	Ceramic chip 0.1μF/25V	CK73F1E104Z
C037,038	257 0004 961	Ceramic chip 100pF/50V	CC73SL1H101J
C039	257 0012 966	Ceramic chip 0.01μF/50V	CK73F1H103Z
C040	254 4256 020	Electrolytic 33μF/25V	CE04W1E330M
C041	257 0012 966	Ceramic chip 0.01μF/50V	CK73F1H103Z
C042	254 4256 020	Electrolytic 33μF/25V	CE04W1E330M
C043,044	257 0003 904	Ceramic chip 22pF/50V	CC73SL1H220J
C045	257 0012 966	Ceramic chip 0.01μF/50V	CK73F1H103Z
C046	254 4254 909	Electrolytic 10μF/16V	CE04W1C100M
C047,048	257 0014 935	Ceramic chip 0.1μF/25V	CK73F1E104Z
C049~055	257 0012 966	Ceramic chip 0.01μF/50V	CK73F1H103Z
C056	257 0004 961	Ceramic chip 100pF/50V	CC73SL1H101J
C057	257 0011 941	Ceramic chip 0.022μF/25V	CK73B1E223K
C058~061	254 4260 948	Electrolytic 1μF/50V	CE04W1H010M
C062	257 0004 932	Ceramic chip 75pF/50V	CC73SL1H750J

Ref. No.	Part No.	Part Name	Remarke
C063,064	257 0010 900	Ceramic chip 0.01μF/50V	CK73B1H103K
C065	257 0012 966	Ceramic chip 0.01μF/50V	CK73F1H103Z
C066	254 4254 909	Electrolytic 10μF/16V	CE04W1C100M
C067,068	256 1035 059	Metalized 0.47μF/50V	CF93A1H474J
C069	254 3053 936	Electrolytic 47μF/16V	CE04D1C470MBP (Bipole)
C070	257 0011 996	Ceramic chip 0.1μF/25V	CK73B1E104K
C071,072	254 4260 948	Electrolytic 1μF/50V	CE04W1H010M
C073,074	257 0010 900	Ceramic chip 0.01μF/50V	CK73B1H103K
C075	257 0002 963	Ceramic chip 15pF/50V	CC73SL1H150J
C076	257 0012 966	Ceramic chip 0.01μF/50V	CK73F1H103Z
C077	254 4252 037	Electrolytic 100μF/10V	CE04W1A101M
C078~080	257 0012 966	Ceramic chip 0.01μF/50V	CK73F1H103Z
C081	257 0014 935	Ceramic chip 0.1μF/25V	CK73F1E104Z
C082~086	257 0012 966	Ceramic chip 0.01μF/50V	CK73F1H103Z
C087	257 0014 935	Ceramic chip 0.1μF/25V	CK73F1E104Z
C088	256 1034 937	Metalized 0.047μF/50V	CF93A1H473J
C089,090	257 0012 966	Ceramic chip 0.01μF/50V	CK73F1H103Z
C091	254 4260 058	Electrolytic 2.2μF/50V	CE04W1H2R2M
C092	257 0012 966	Ceramic chip 0.01μF/50V	CK73F1H103Z
C093	257 0008 970	Ceramic chip 820pF/50V	CK73B1H821K
C094~096	257 0012 966	Ceramic chip 0.01μF/50V	CK73F1H103Z
C098	254 4254 909	Electrolytic 10μF/16V	CE04W1C100M
C099	257 0012 966	Ceramic chip 0.01μF/50V	CK73F1H103Z
C100	257 0014 935	Ceramic chip 0.1μF/25V	CK73F1E104Z
C125~128	257 0012 966	Ceramic chip 0.01μF/50V	CK73F1H103Z
C141	257 0012 966	Ceramic chip 0.01μF/50V	CK73F1H103Z
C143,144	257 0012 966	Ceramic chip 0.01μF/50V	CK73F1H103Z
C147	257 0012 966	Ceramic chip 0.01μF/50V	CK73F1H103Z
C148	254 4254 909	Electrolytic 10μF/16V	CE04W1C100M
C151	257 0008 983	Ceramic chip 1000pF/50V	CK73B1H102K
C152	257 0012 966	Ceramic chip 0.01μF/50V	CK73F1H103Z
C153	254 4254 909	Electrolytic 10μF/16V	CE04W1C100M
C154	254 4347 748	Electrolytic 1μF/50V	CE04W1H010M(ARSA)
C155	254 4254 909	Electrolytic 10μF/16V	CE04W1C100M
C160	255 4235 743	Film cap. 0.022μF/100V	CQ93P2A223J(NH)
C161	257 0012 966	Ceramic chip 0.01μF/50V	CK73F1H103Z
C162	257 0008 983	Ceramic chip 1000pF/50V	CK73B1H102K
C189	257 0012 966	Ceramic chip 0.01μF/50V	CK73F1H103Z
C287	257 0014 935	Ceramic chip 0.1μF/25V	CK73F1E104Z
C289	254 4254 938	Electrolytic 47μF/16V	CE04W1C470M
C296,297	257 0012 966	Ceramic chip 0.01μF/50V	CK73F1H103Z
C801	257 0012 966	Ceramic chip 0.01μF/50V	CK73F1H103Z

Ref. No.	Part No.	Part Name	Remarke	Q'ty
OTHERS PARTS GROUP				
	—	(P.W.board)		(1)
L001,002	235 0060 905	Inductor 2.2μH		2
L003~005	235 0060 918	Inductor 4.7μH		3
L006	235 0060 905	Inductor 2.2μH		1
L007	235 0070 953	:Inductor 68μH		1
L009,010	235 0060 918	Inductor 4.7μH		1
LF001~008	235 0048 008	EMI filter		8
XL001	399 0311 000	Crystal 18.432 MHz		1
JK101	204 8357 027	2 P pin jack		1
JK102	204 8517 003	1 P pin jack(S-GND)		1
CN37A	205 0736 092	37 P FFC connector base		1
CN14A	205 0986 020	14 P connector plug(TKC-A)		1
CN11B,C	205 0536 098	11 P connector socket		2
CN8G,H	205 0986 004	8 P connector plug(TKC-A)		2

BLOCK DIAGRAM

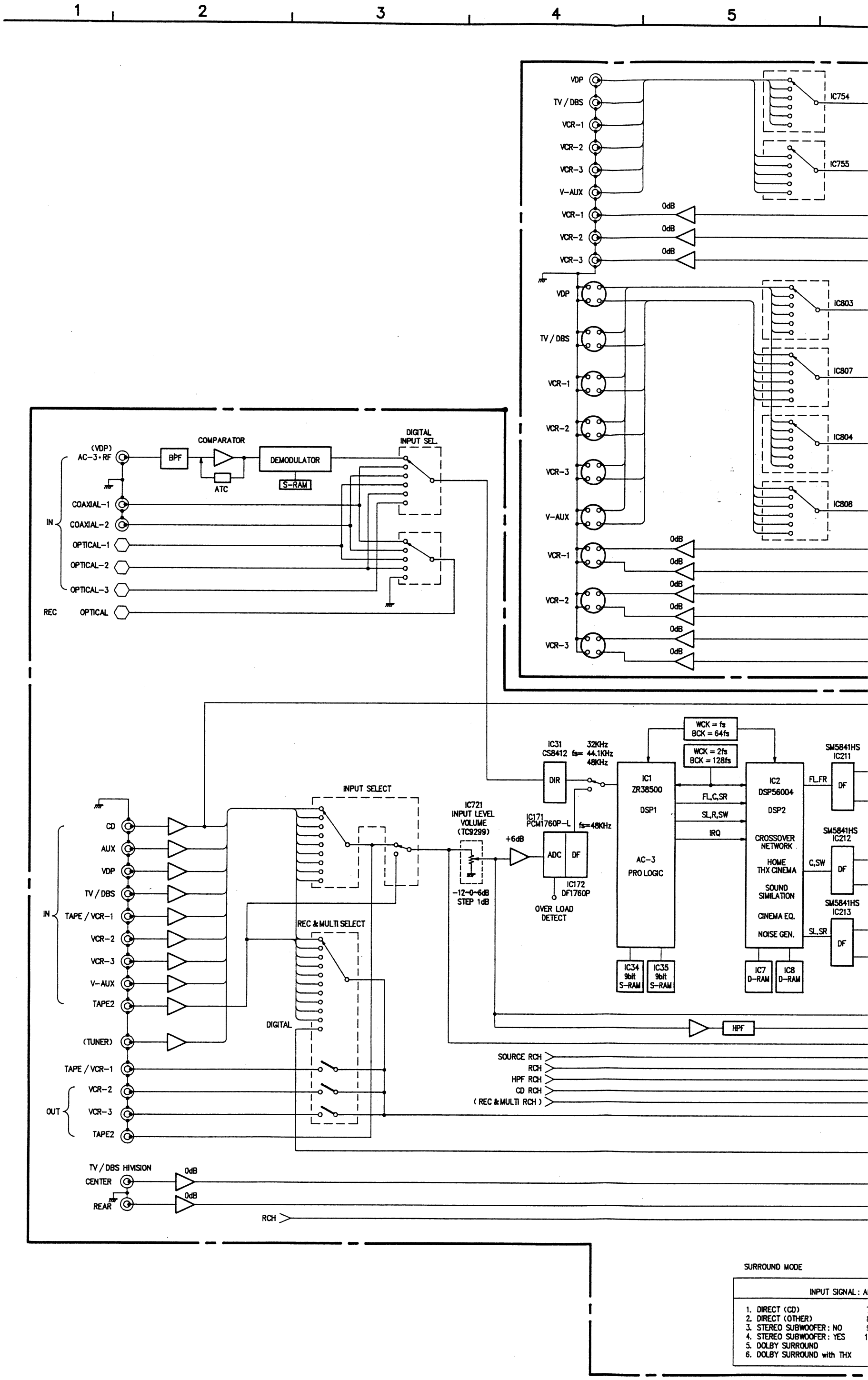

SURROUND MODE

INPUT SIGNAL : A
1. DIRECT (CD)
2. DIRECT (OTHER)
3. STEREO SUBWOOFER : NO
4. STEREO SUBWOOFER : YES
5. DOLBY SURROUND
6. DOLBY SURROUND with THX

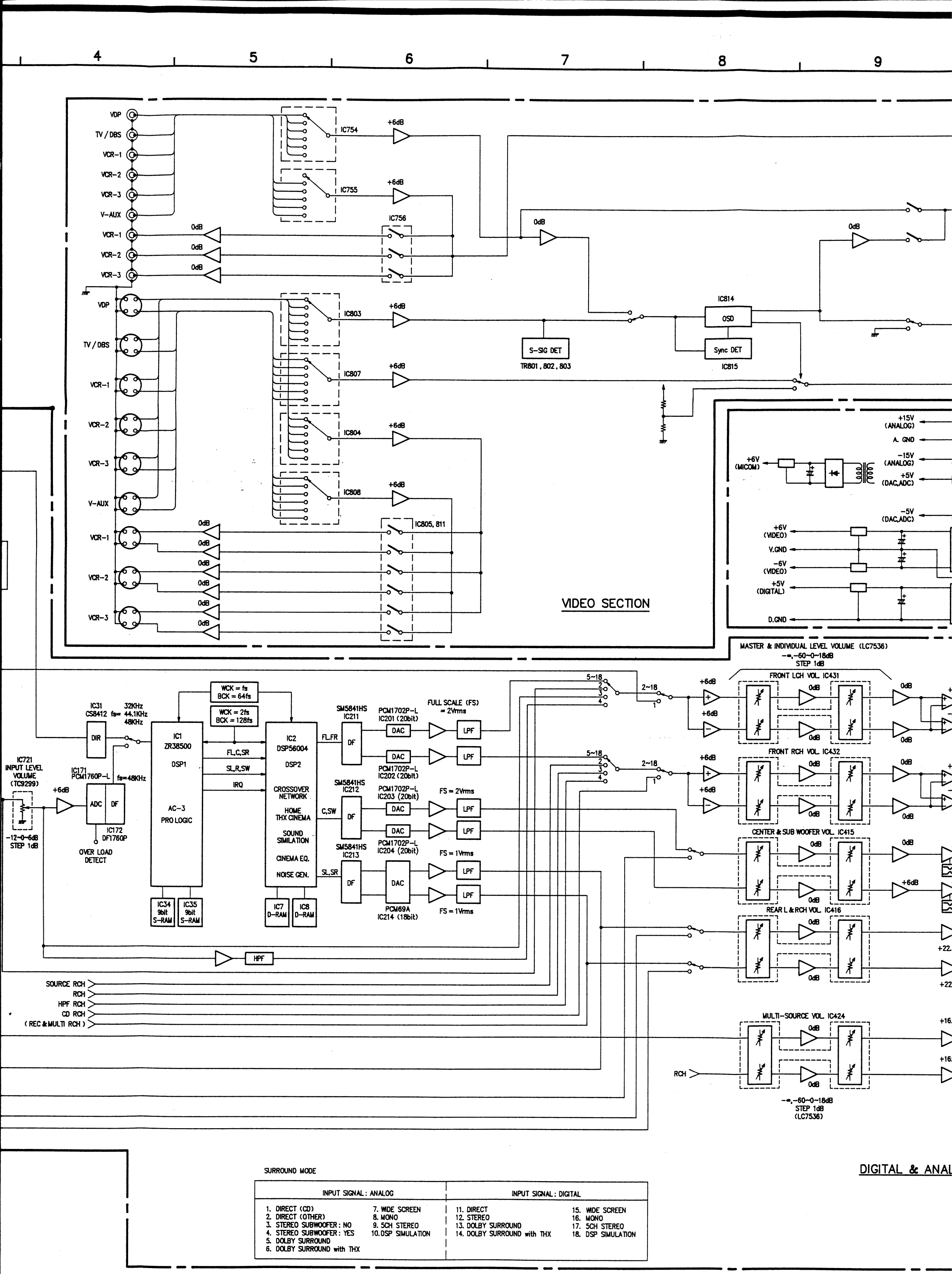

SURROUND MODE

INPUT SIGNAL : ANALOG		INPUT SIGNAL : DIGITAL	
1. DIRECT (CD)	7. WIDE SCREEN	11. DIRECT	15. WIDE SCREEN
2. DIRECT (OTHER)	8. MONO	12. STEREO	16. MONO
3. STEREO SUBWOOFER : NO	9. 5CH STEREO	13. DOLBY SURROUND	17. 5CH STEREO
4. STEREO SUBWOOFER : YES	10. DSP SIMULATION	14. DOLBY SURROUND with THX	18. DSP SIMULATION
5. DOLBY SURROUND			
6. DOLBY SURROUND with THX			

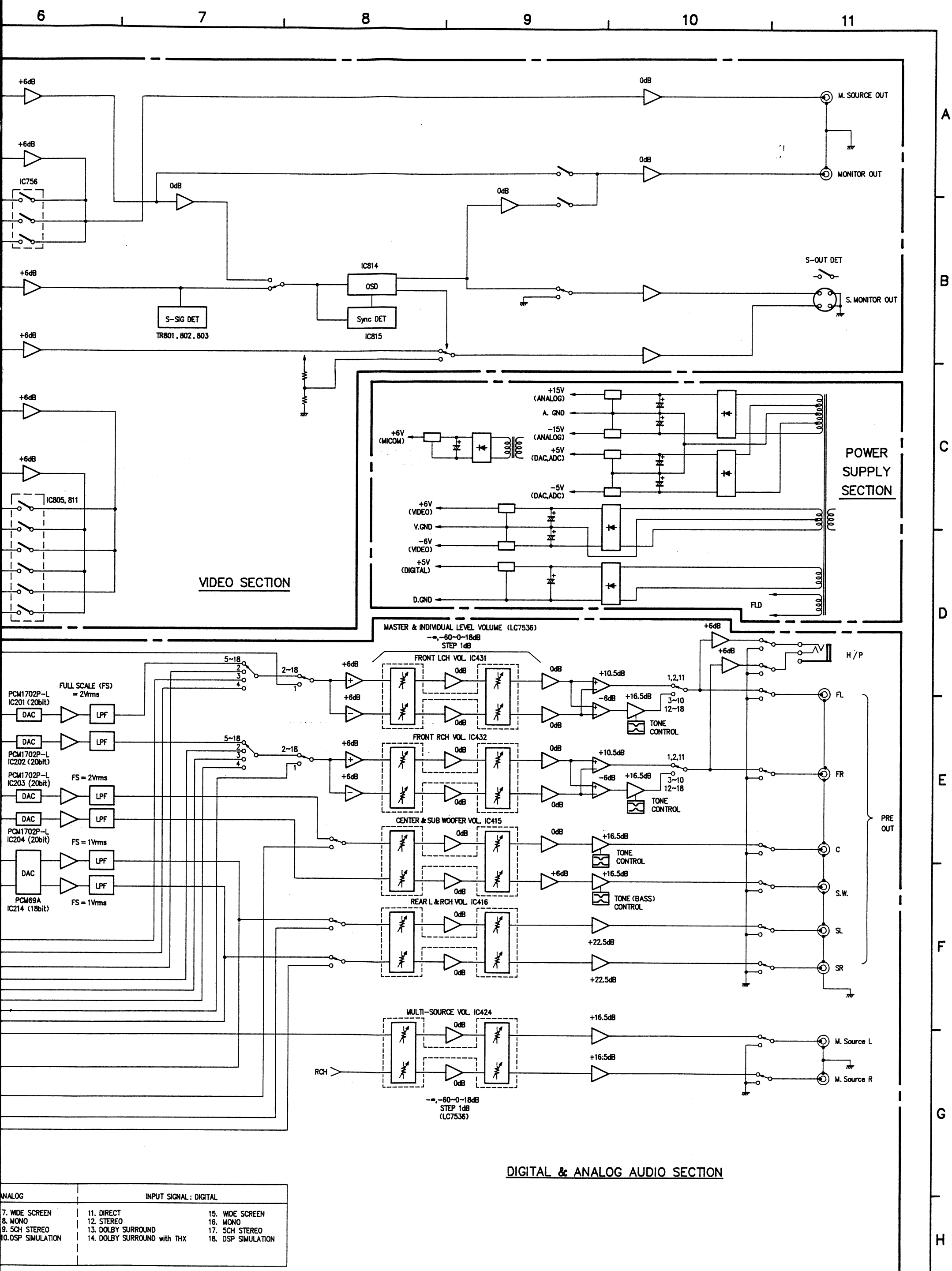

ANALOG	INPUT SIGNAL : DIGITAL	
7. WIDE SCREEN	11. DIRECT	15. WIDE SCREEN
8. MONO	12. STEREO	16. MONO
9. 5CH STEREO	13. DOLBY SURROUND	17. 5CH STEREO
10. DSP SIMULATION	14. DOLBY SURROUND with THX	18. DSP SIMULATION

WIRING DIAGRAM

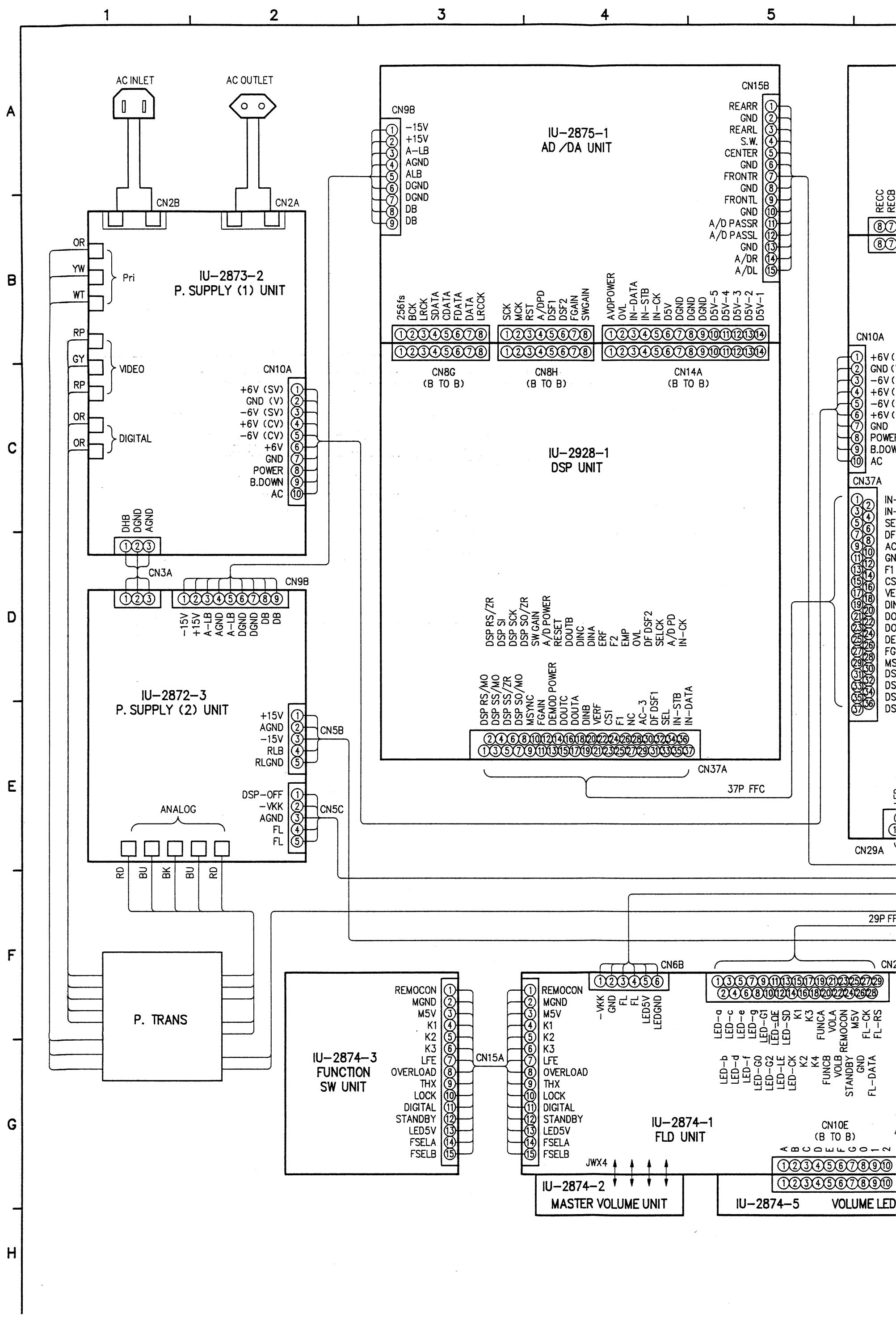

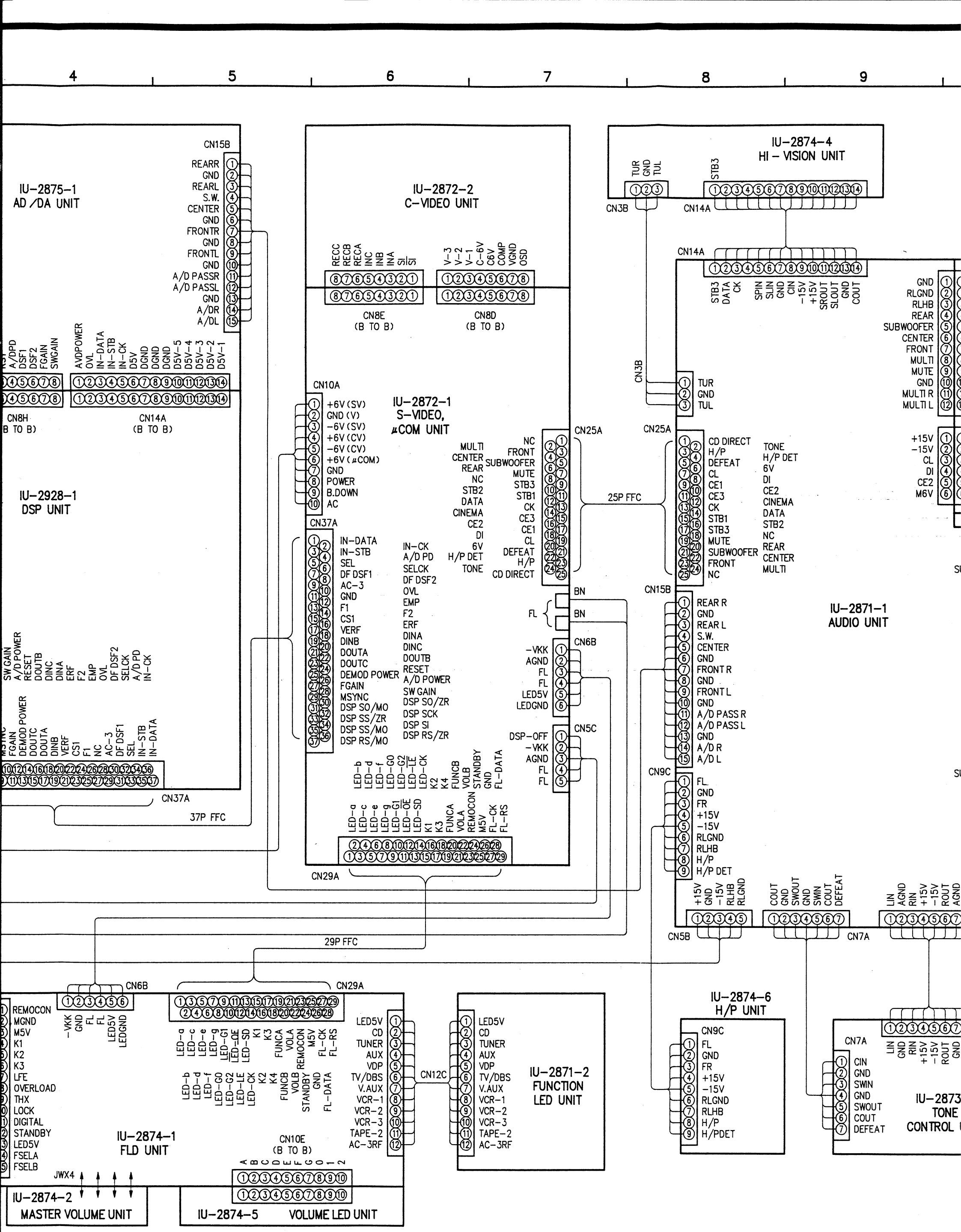
4
5
6
7
8
9
IU-2875-1
AD /DA UNIT
CN15B
REARR
GND
REARL
S.W.
CENTER
GND
FRONTR
GND
FRONTL
GND
A/D PASSR
A/D PASSL
GND
A/DR
A/DL
A/DPD
DSF1
DSF2
FGAIN
SWGAIN
AVDPOWER
OVL
IN-DATA
IN-STB
IN-CK
D5V
DGND
DGND
DGND
D5V-5
D5V-4
D5V-3
D5V-2
D5V-1
CN8H
(B TO B)
CN14A
(B TO B)
IU-2928-1
DSP UNIT
SW GAIN
A/D POWER
RESET
DOUTB
DINC
DINA
ERF
F2
EMP
OVL
DF DSF2
SELCK
A/D PD
IN-CK
MSYNC
FGAIN
DEMOD POWER
DOUTC
DOUTA
DINB
VERF
CS1
F1
NC
AC-3
DF DSF1
SEL
IN-STB
IN-DATA
CN37A
37P FFC
IU-2872-2
C-VIDEO UNIT
RECC
RECB
RECA
INC
INB
INA
SI
SI
V-3
V-2
V-1
C-6V
C6V
COMP
VGND
OSD
CN8E
(B TO B)
CN8D
(B TO B)
CN10A
+6V (SV)
GND (V)
-6V (SV)
+6V (CV)
-6V (CV)
+6V (μCOM)
GND
POWER
B.DOWN
AC
IU-2872-1
S-VIDEO,
μCOM UNIT
CN37A
IN-DATA
IN-STB
SEL
DF DSF1
AC-3
GND
F1
CS1
VERF
DINB
DOUTA
DOUTC
DEMOD POWER
FGAIN
MSYNC
DSP SO/MO
DSP SS/ZR
DSP SS/MO
DSP RS/MO
IN-CK
A/D PD
SELCK
DF DSF2
OVL
EMP
F2
ERF
DINA
DINC
DOUTB
RESET
A/D POWER
SW GAIN
DSP SO/ZR
DSP SCK
DSP SI
DSP RS/ZR
MULTI
CENTER
REAR
NC
STB2
DATA
CINEMA
CE2
DI
6V
H/P DET
TONE
NC
FRONT
SUBWOOFER
MUTE
STB3
STB1
CK
CE3
CE1
CL
DEFEAT
H/P
CD DIRECT
CN25A
25P FFC
BN
FL
BN
CN6B
-VKK
AGND
FL
FL
LED5V
LEDGND
CN5C
DSP-OFF
-VKK
AGND
FL
FL
LED-b
LED-d
LED-f
LED-G0
LED-G2
LED-LE
LED-CK
K2
K4
FUNCB
VOLB
STANDBY
GND
FL-DATA
LED-a
LED-c
LED-e
LED-g
LED-G1
LED-OE
LED-SD
K1
K3
FUNCA
VOLA
REMOCON
M5V
FL-CK
FL-RS
CN29A
29P FFC
IU-2874-4
HI - VISION UNIT
TUR
GND
TUL
STB3
CN3B
CN14A
CN14A
STB3
DATA
CK
SPIN
SLIN
GND
CIN
-15V
+15V
SROUT
SLOUT
GND
COUT
CN3B
TUR
GND
TUL
CN25A
CN25A
CD DIRECT
H/P
DEFEAT
CL
CE1
CE3
CK
STB1
STB3
MUTE
SUBWOOFER
FRONT
NC
TONE
H/P DET
6V
DI
CE2
CINEMA
DATA
STB2
NC
REAR
CENTER
MULTI
CN15B
REAR R
GND
REAR L
S.W.
CENTER
GND
FRONT R
GND
FRONT L
GND
A/D PASS R
A/D PASS L
GND
A/D R
A/D L
IU-2871-1
AUDIO UNIT
CN9C
FL
GND
FR
+15V
-15V
RLGND
RLHB
H/P
H/P DET
GND
RLGND
RLHB
REAR
SUBWOOFER
CENTER
FRONT
MULTI
MUTE
GND
MULTI R
MULTI L
+15V
-15V
CL
DI
CE2
M6V
+15V
GND
-15V
RLHB
RLGND
CN5B
COUT
GND
SWOUT
GND
SWIN
COUT
DEFEAT
CN7A
LIN
AGND
RIN
+15V
-15V
ROUT
AGND
CN6B
CN29A
REMOCON
MGND
M5V
K1
K2
K3
LFE
OVERLOAD
THX
LOCK
DIGITAL
STANDBY
LED5V
FSELA
FSELB
-VKK
GND
FL
FL
LED5V
LEDGND
LED-a
LED-c
LED-e
LED-g
LED-G1
LED-OE
LED-SD
K1
K3
FUNCA
VOLA
REMOCON
M5V
FL-CK
FL-RS
LED-b
LED-d
LED-f
LED-G0
LED-G2
LED-LE
LED-CK
K2
K4
FUNCB
VOLB
STANDBY
GND
FL-DATA
IU-2874-1
FLD UNIT
JWX4
CN10E
(B TO B)
A
B
C
D
E
F
G
0
1
2
IU-2874-2
MASTER VOLUME UNIT
IU-2874-5
VOLUME LED UNIT
LED5V
CD
TUNER
AUX
VDP
TV/DBS
V.AUX
VCR-1
VCR-2
VCR-3
TAPE-2
AC-3RF
CN12C
IU-2871-2
FUNCTION
LED UNIT
IU-2874-6
H/P UNIT
CN9C
FL
GND
FR
+15V
-15V
RLGND
RLHB
H/P
H/PDET
CN7A
CIN
GND
SWIN
GND
SWOUT
COUT
DEFEAT
LIN
GND
RIN
+15V
-15V
ROUT
GND
IU-2873
TONE
CONTROL

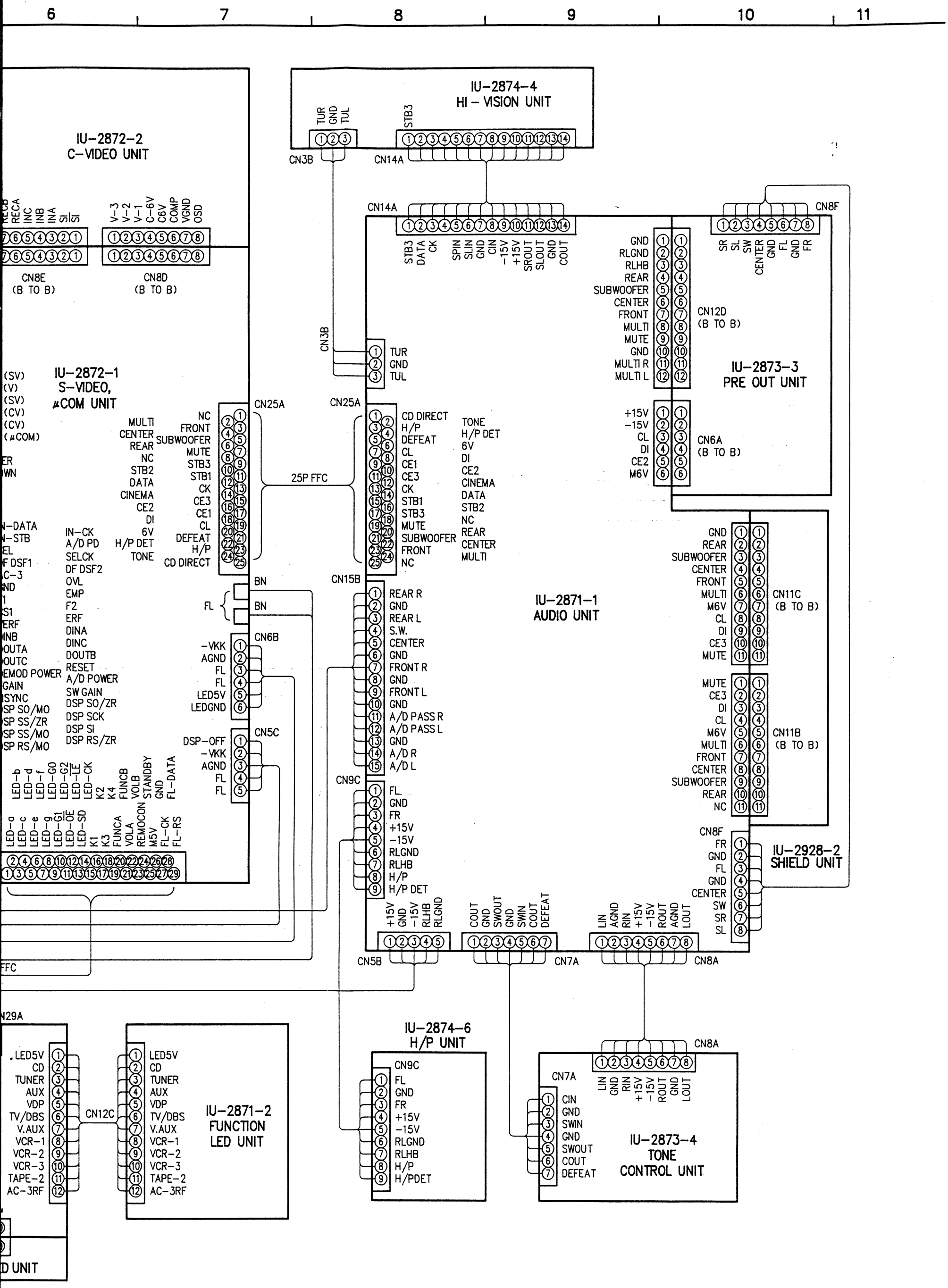
6
7
8
9
10
11
IU-2872-2
C-VIDEO UNIT
CN8E
(B TO B)
CN8D
(B TO B)
IU-2872-1
S-VIDEO,
μCOM UNIT
CN25A
25P FFC
CN6B
CN5C
IU-2874-4
HI - VISION UNIT
CN3B
CN14A
STB3
TUR
GND
TUL
CN8F
CN12D
(B TO B)
IU-2873-3
PRE OUT UNIT
CN6A
(B TO B)
CN15B
CN9C
IU-2871-1
AUDIO UNIT
CN11C
(B TO B)
CN11B
(B TO B)
IU-2928-2
SHIELD UNIT
CN5B
CN7A
CN8A
CN29A
CN12C
IU-2871-2
FUNCTION
LED UNIT
IU-2874-6
H/P UNIT
IU-2873-4
TONE
CONTROL UNIT

SCHEMATIC DIAGRAM - (1/11)

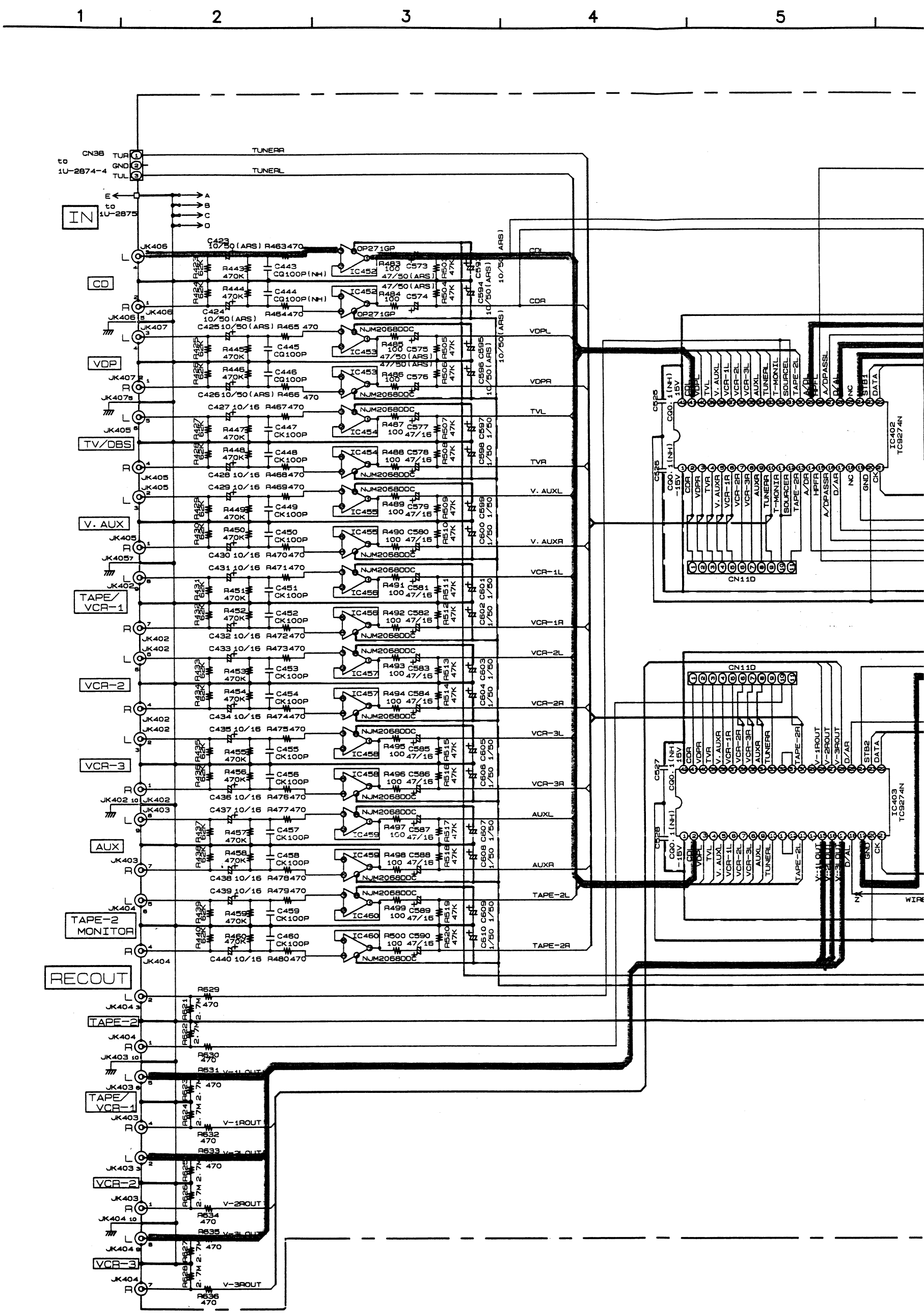

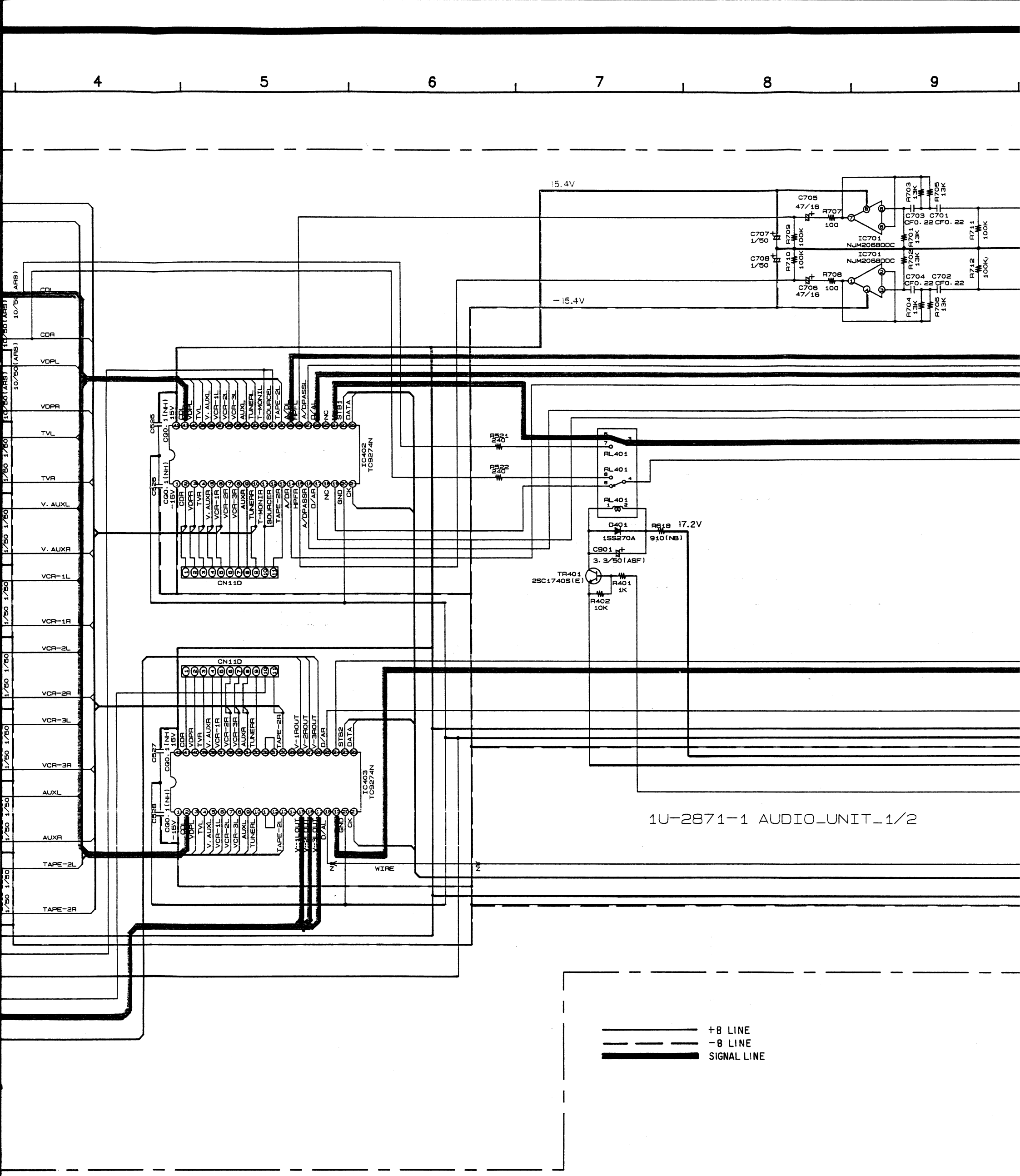

WARNING:
Parts marked with this symbol ⚠ ▒ have critical characteristics.
Use ONLY replacement parts recommended by the manufacturer.

CAUTION:
Before returning the unit to the customer, make sure you make either (1) a leakage current check or (2) a line to chassis resistance check. If the leakage current exceeds 0.5 milliamps, or if the resistance from chassis to either side of the power cord is less than 240 kohms, the unit is defective.

WARNING:
DO NOT return the unit to the customer until the problem is located and corrected.

NOTES
ALL RESISTANCE VAL
ALL CAPACITANCE VA
EACH VOLTAGE AND
CONDITION.
CIRCUIT AND PARTS
NOTICE.

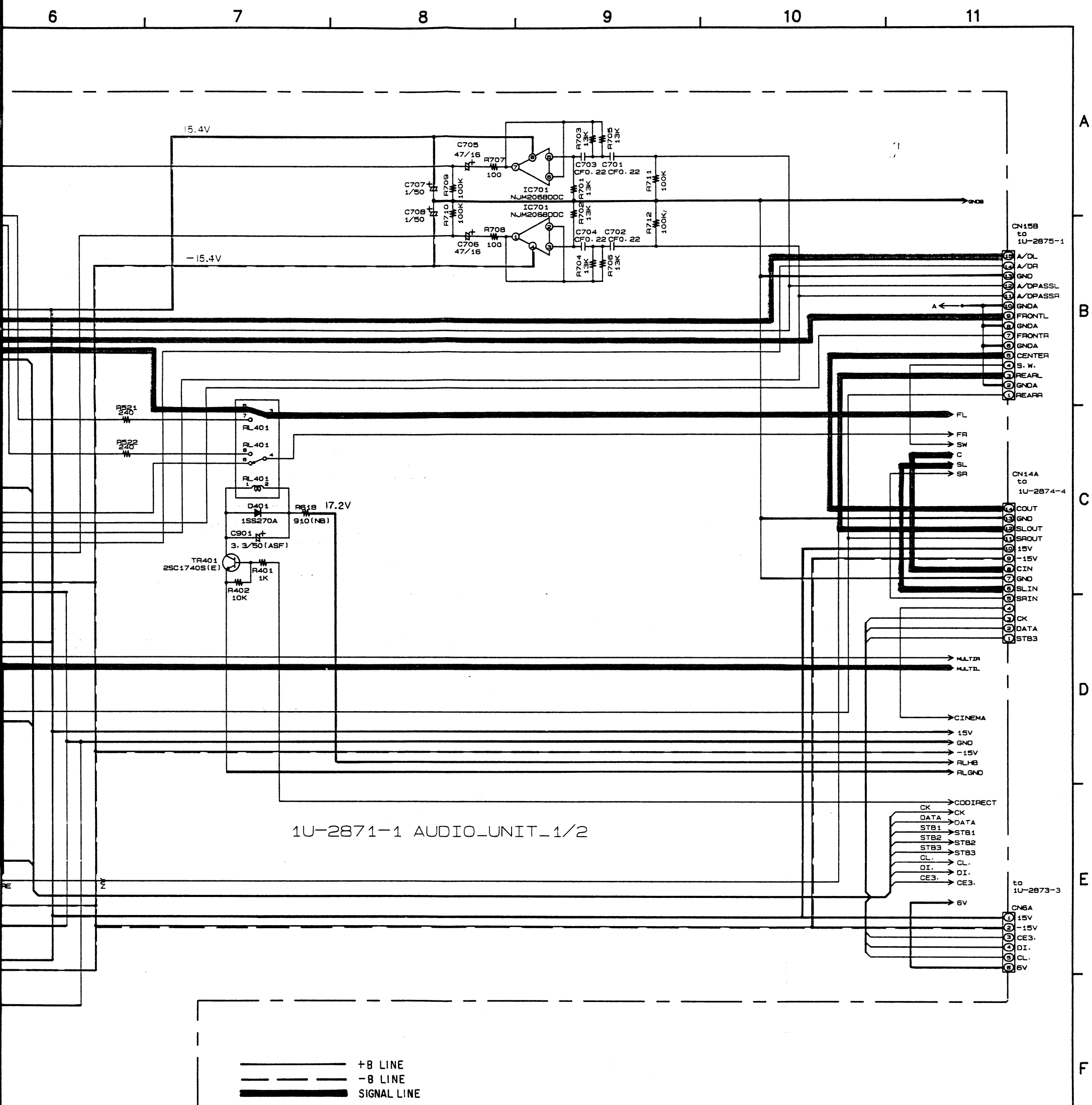

WARNING:
Parts marked with this symbol ⚠ ▒ have critical characteristics.
Use ONLY replacement parts recommended by the manufacturer.

CAUTION:
Before returning the unit to the customer, make sure you make either (1) a leakage current check or (2) a line to chassis resistance check. If the leakage current exceeds 0.5 milliamps, or if the resistance from chassis to either side of the power cord is less than 240 kohms, the unit is defective.

WARNING:
DO NOT return the unit to the customer until the problem is located and corrected.

NOTES
ALL RESISTANCE VALUES IN OHM. k=1,000 OHM, M=1,000,000 OHM

ALL CAPACITANCE VALUES IN MICRO FARAD. P=MICRO-MICRO FARAD

EACH VOLTAGE AND CURRENT ARE MEASURED AT NO SIGNAL INPUT CONDITION.

CIRCUIT AND PARTS ARE SUBJECT TO CHANGE WITHOUT PRIOR NOTICE.

SCHEMATIC DIAGRAM - (2/11)

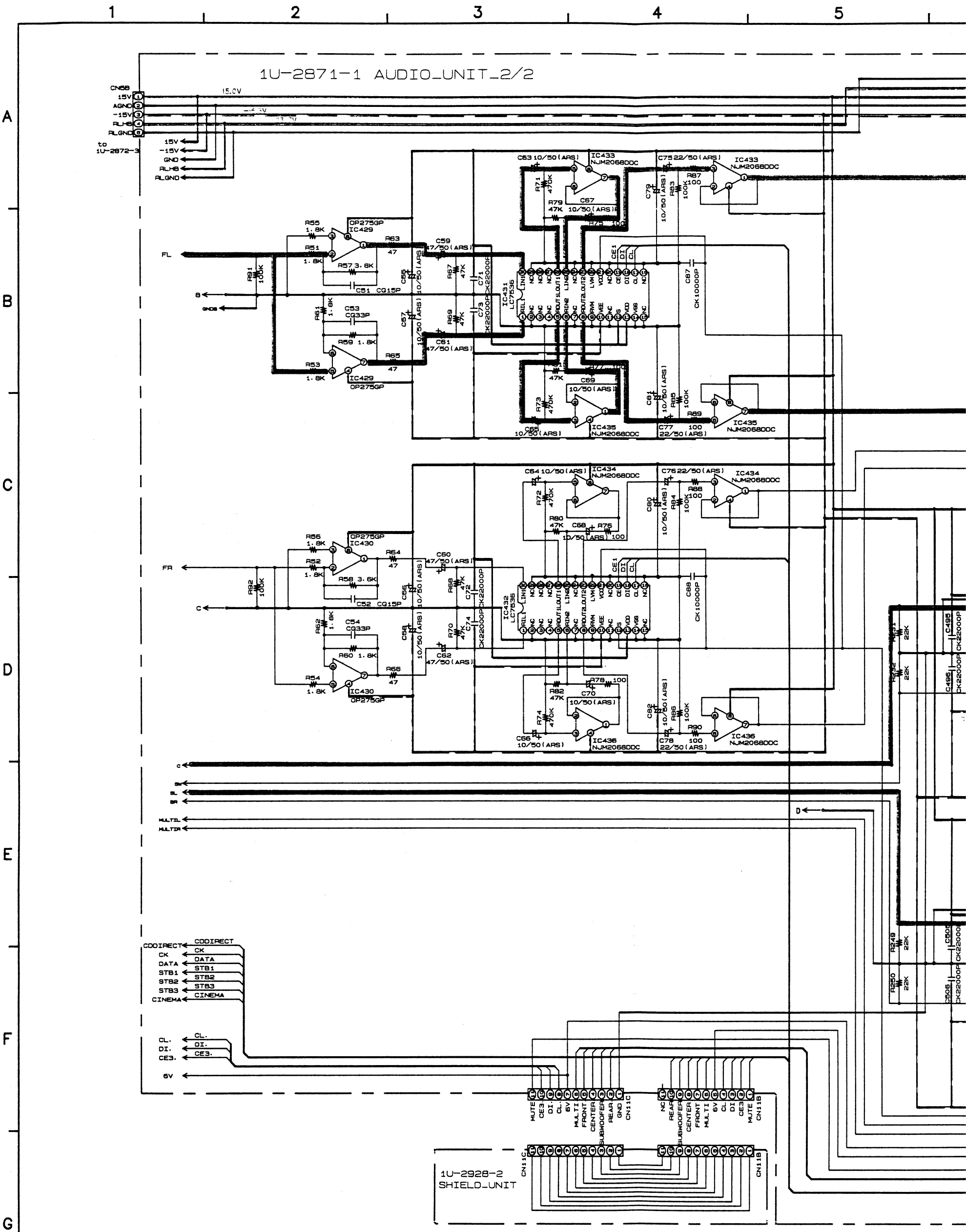

WARNING:
Parts marked with this symbol ⚠ ▒ have critical characteristics.
Use ONLY replacement parts recommended by the manufacturer.

CAUTION:
Before returning the unit to the customer, make sure you make either (1) a leakage current check or (2) a line to chassis resistance check. If the leakage current exceeds 0.5 milliamps, or if the resistance from chassis to either side of the power cord is less than 240 kohms, the unit is defective.

WARNING:
DO NOT return the unit to the customer until the problem is located and corrected.

NOTES
ALL RESISTANCE VALUES IN OHM. k=1,000 OHM, M=1,000,000 OHM
ALL CAPACITANCE VALUES IN MICRO FARAD. P=MICRO-MICRO FARAD
EACH VOLTAGE AND CURRENT ARE MEASURED AT NO SIGNAL INPUT CONDITION.
CIRCUIT AND PARTS ARE SUBJECT TO CHANGE WITHOUT PRIOR NOTICE.

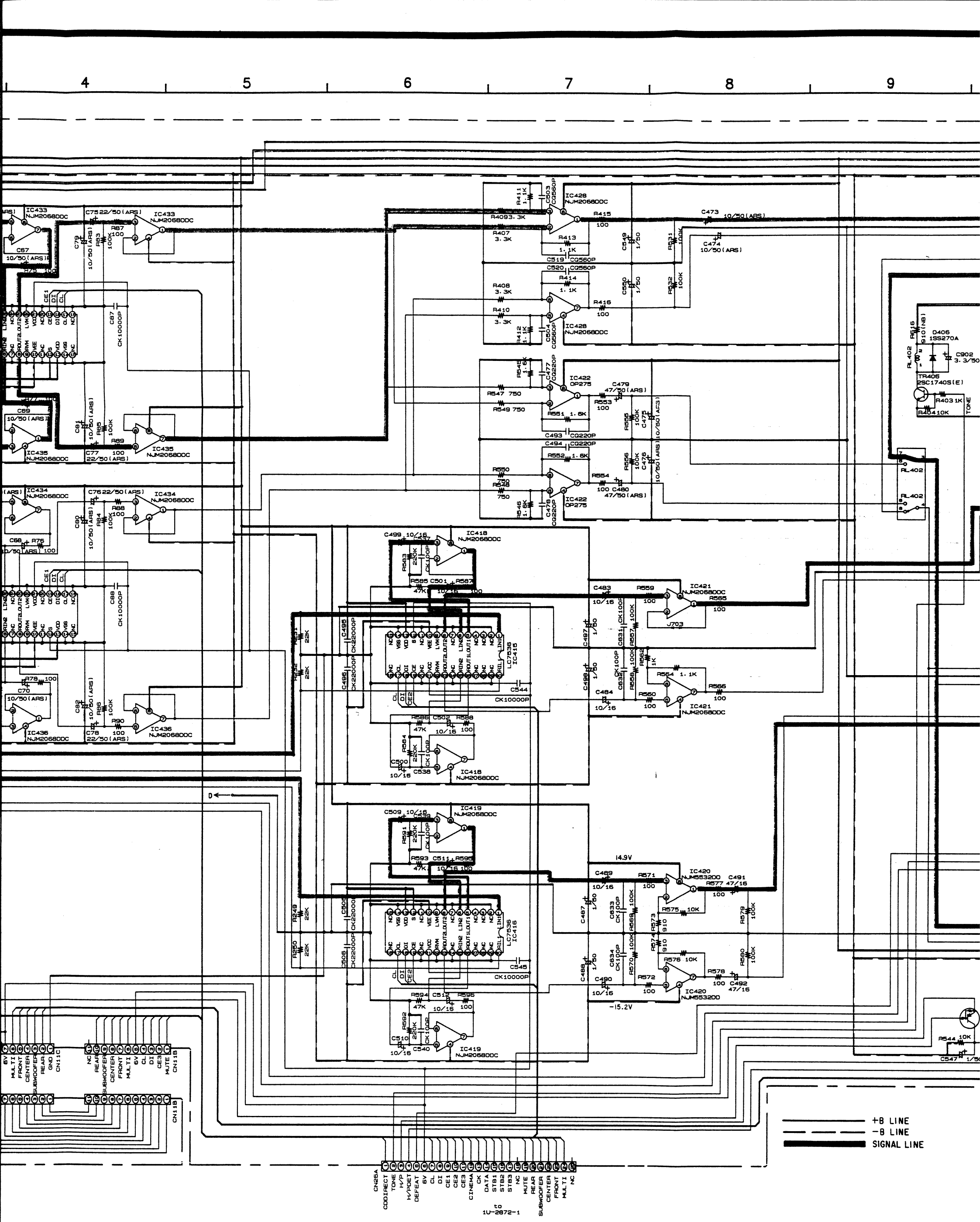

NCE VALUES IN OHM. k=1,000 OHM, M=1,000,000 OHM
ANCE VALUES IN MICRO FARAD. P=MICRO-MICRO FARAD
GE AND CURRENT ARE MEASURED AT NO SIGNAL INPUT

) PARTS ARE SUBJECT TO CHANGE WITHOUT PRIOR

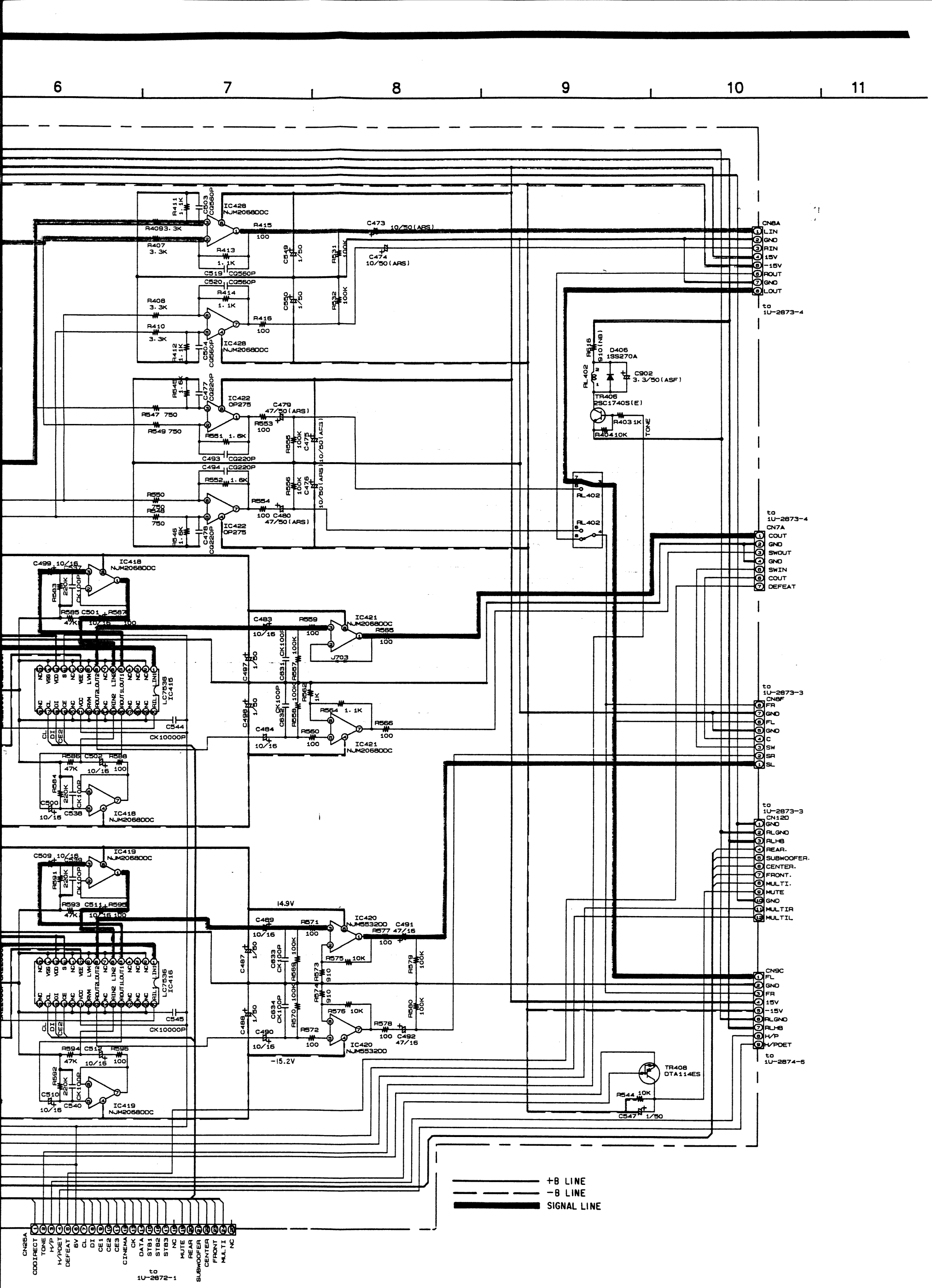
6
7
8
9
10
11
IC428 NJM2068DDC
IC422 OP275
IC418 NJM2068DDC
IC421 NJM2068DDC
IC419 NJM2068DDC
IC420 NJM5532DD
LC7536 IC415
LC7536 IC416
CN8A
LIN
GND
RIN
15V
-15V
ROUT
GND
LOUT
to 1U-2873-4
CN7A
COUT
GND
SWOUT
GND
SWIN
COUT
DEFEAT
to 1U-2873-4
CN8F
FR
GND
FL
GND
C
SW
SR
SL
to 1U-2873-3
CN12D
GND
RLGND
RLHB
REAR.
SUBWOOFER.
CENTER.
FRONT.
MULTI.
MUTE
GND
MULTIR
MULTIL
to 1U-2873-3
CN9C
FL
GND
FR
15V
-15V
RLGND
RLHB
H/P
H/PDET
to 1U-2874-6
CN26A
CDDIRECT
TONE
H/P
H/PDET
DEFEAT
6V
CL
DI
CE1
CE2
CE3
CINEMA
CK
DATA
STB1
STB2
STB3
NC
MUTE
REAR
SUBWOOFER
CENTER
FRONT
MULTI
NC
to 1U-2872-1
TR406 2SC1740S(E)
TR408 DTA114ES
D406 1SS270A
RL402
14.9V
-15.2V
+B LINE
-B LINE
SIGNAL LINE

SCHEMATIC DIAGRAM - (3/11)

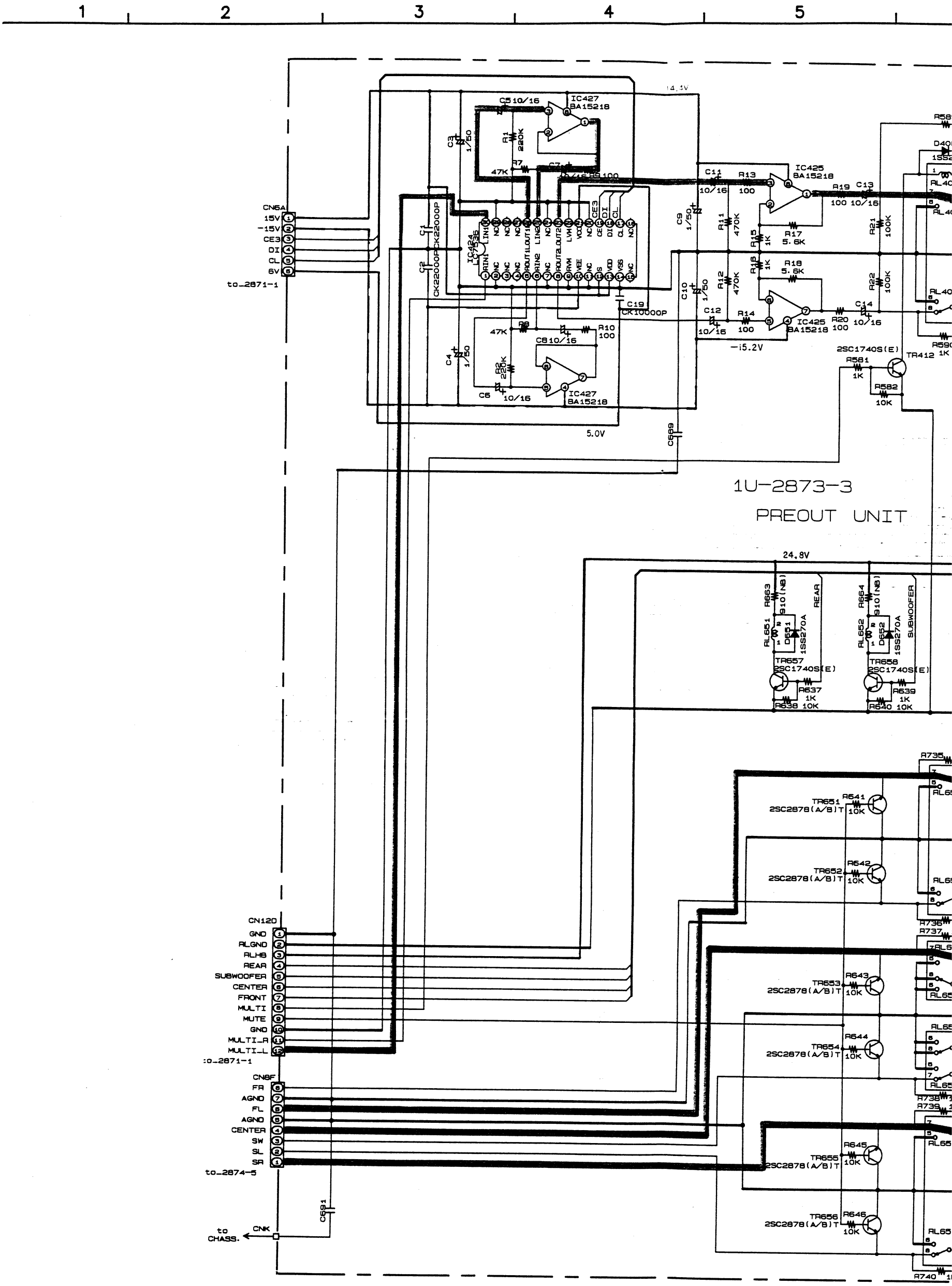

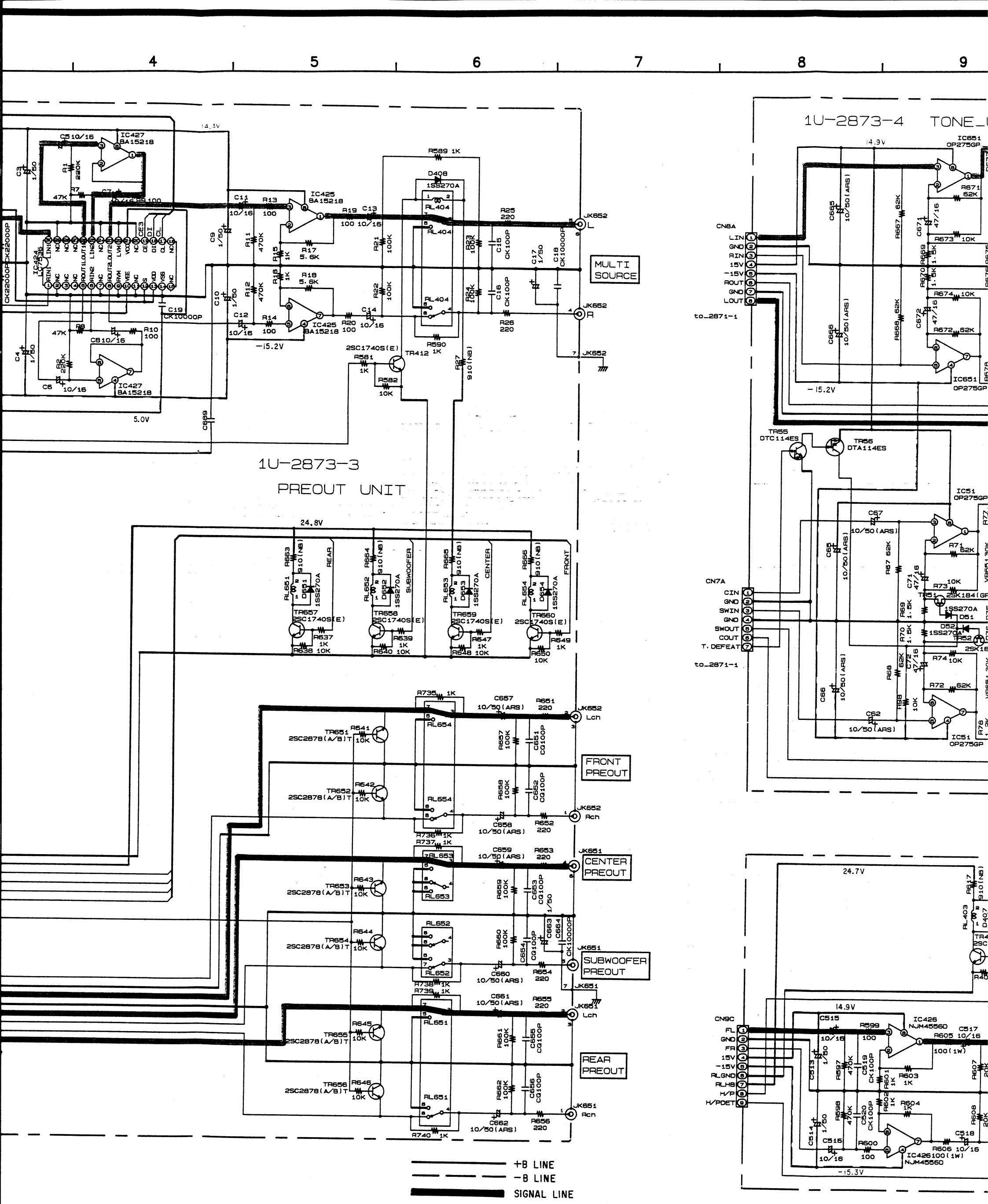

WARNING:
Parts marked with this symbol ⚠ ▒ have critical characteristics.
Use ONLY replacement parts recommended by the manufacturer.

CAUTION:
Before returning the unit to the customer, make sure you make either (1) a leakage current check or (2) a line to chassis resistance check. If the leakage current exceeds 0.5 milliamps, or if the resistance from chassis to either side of the power cord is less than 240 kohms, the unit is defective.

WARNING:
DO NOT return the unit to the customer until the problem is located and corrected.

NOTES
ALL RESISTAN
ALL CAPACITA
EACH VOLTAG
CONDITION.
CIRCUIT AND
NOTICE.

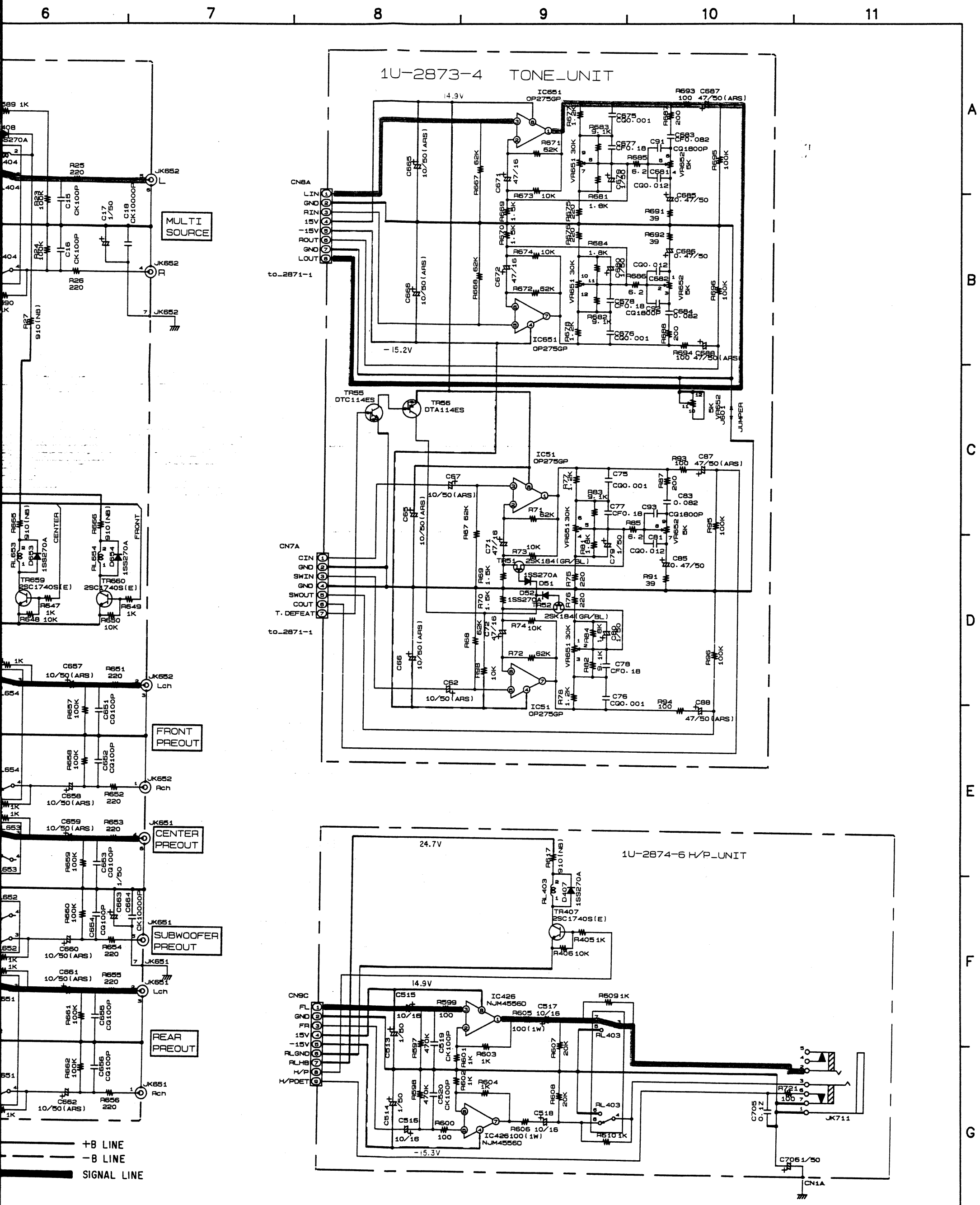

WARNING:
Parts marked with this symbol ⚠ ▒ have critical characteristics.
Use ONLY replacement parts recommended by the manufacturer.

CAUTION:
Before returning the unit to the customer, make sure you make either (1) a leakage current check or (2) a line to chassis resistance check. If the leakage current exceeds 0.5 milliamps, or if the resistance from chassis to either side of the power cord is less than 240 kohms, the unit is defective.

WARNING:
DO NOT return the unit to the customer until the problem is located and corrected.

NOTES
ALL RESISTANCE VALUES IN OHM. k=1,000 OHM, M=1,000,000 OHM
ALL CAPACITANCE VALUES IN MICRO FARAD. P=MICRO-MICRO FARAD
EACH VOLTAGE AND CURRENT ARE MEASURED AT NO SIGNAL INPUT CONDITION.
CIRCUIT AND PARTS ARE SUBJECT TO CHANGE WITHOUT PRIOR NOTICE.

SCHEMATIC DIAGRAM - (4/11)

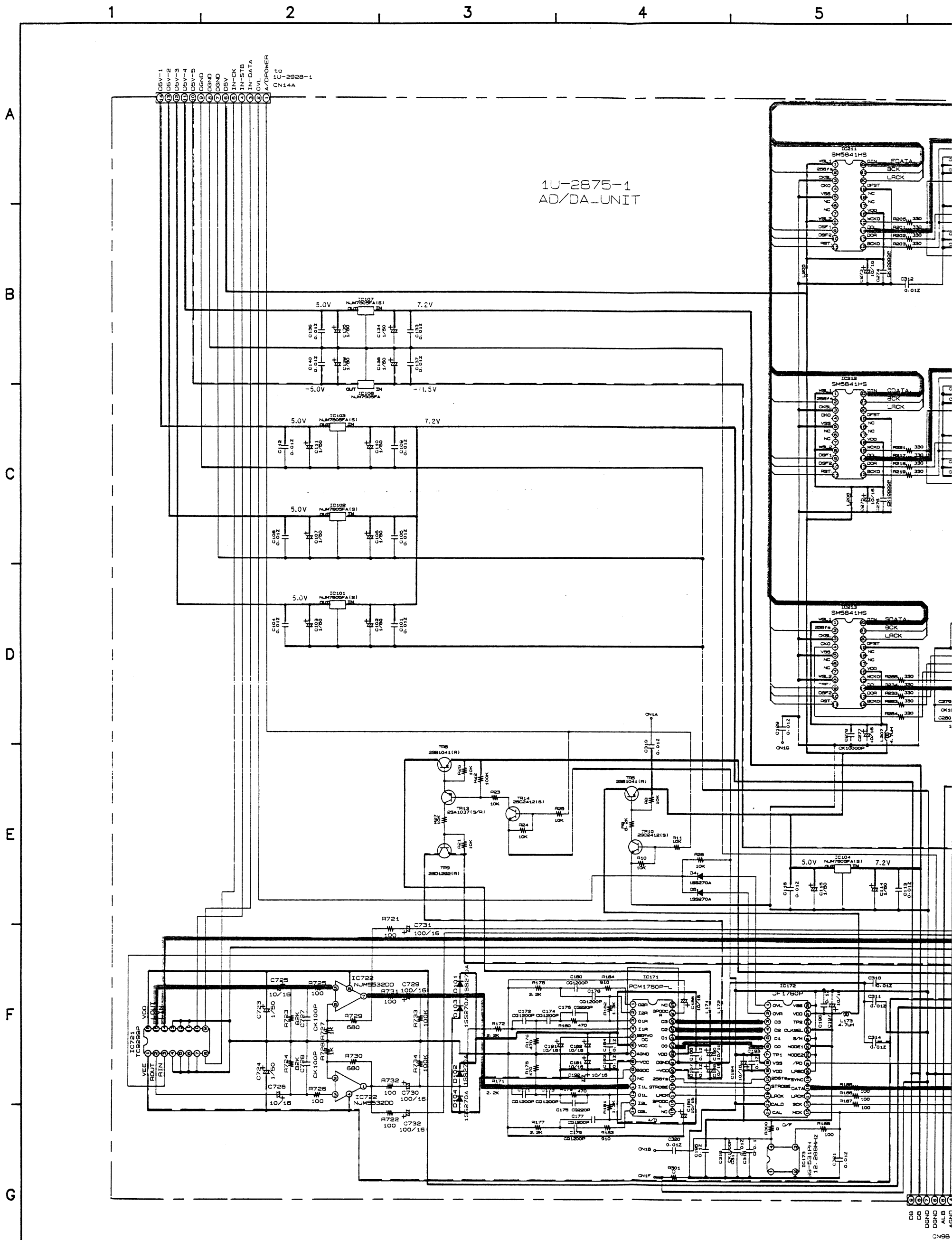

WARNING:
Parts marked with this symbol ⚠ ▒ have critical characteristics.
Use ONLY replacement parts recommended by the manufacturer.

CAUTION:
Before returning the unit to the customer, make sure you make either (1) a leakage current check or (2) a line to chassis resistance check. If the leakage current exceeds 0.5 milliamps, or if the resistance from chassis to either side of the power cord is less than 240 kohms, the unit is defective.

WARNING:
DO NOT return the unit to the customer until the problem is located and corrected.

NOTES
ALL RESISTANCE VALUES IN OHM. k=1,000 OHM, M=1,000,000 OHM
ALL CAPACITANCE VALUES IN MICRO FARAD. P=MICRO-MICRO FARAD
EACH VOLTAGE AND CURRENT ARE MEASURED AT NO SIGNAL INPUT CONDITION.
CIRCUIT AND PARTS ARE SUBJECT TO CHANGE WITHOUT PRIOR NOTICE.

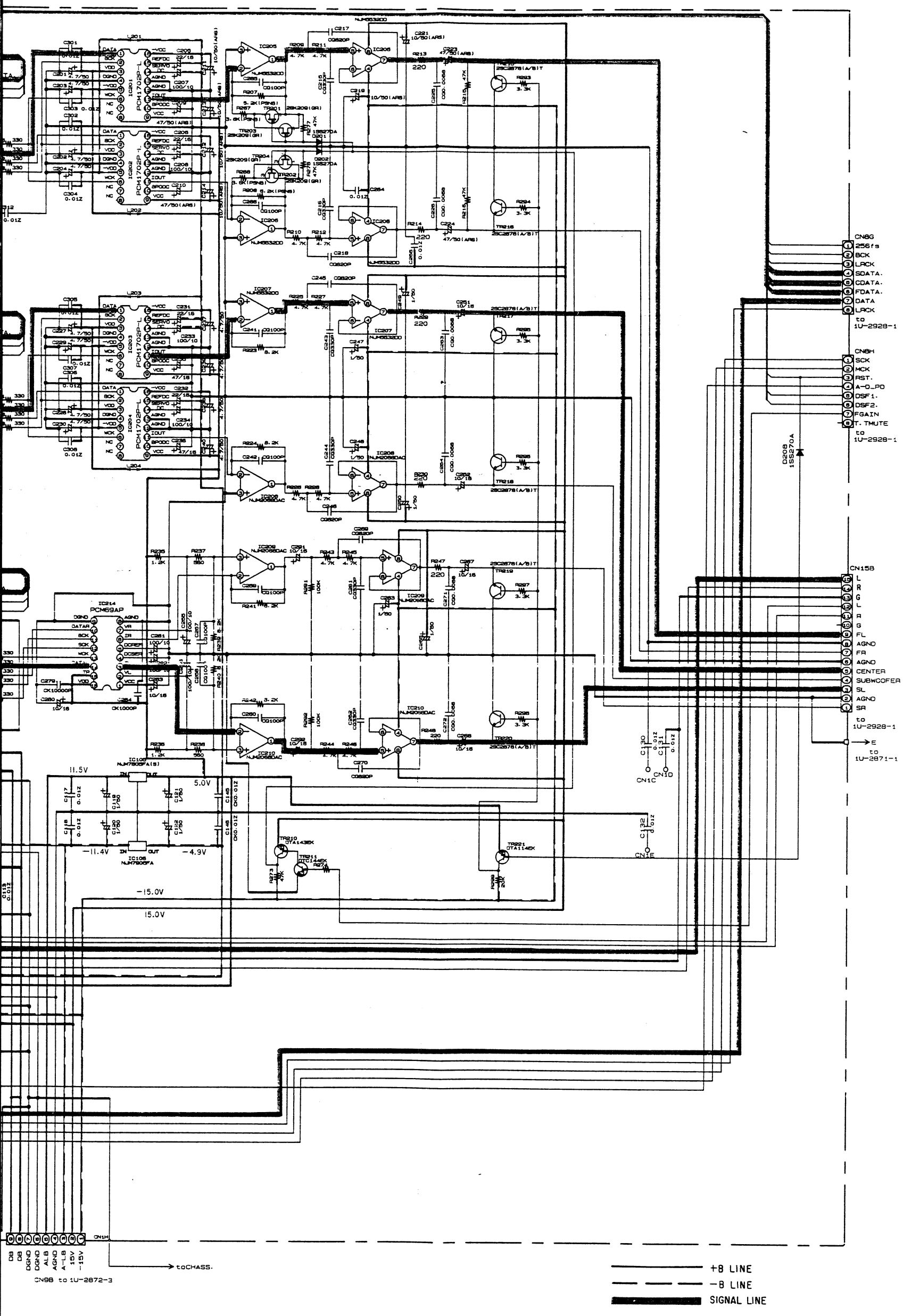
6
7
8
9
10
11
CN8G
256fs
BCK
LRCK
SDATA.
CDATA.
FDATA.
DATA
LRCK
to 1U-2928-1
CN8H
SCK
MCK
RST.
A-D_PD
DSF1.
DSF2.
FGAIN
T. TMUTE
to 1U-2928-1
CN15B
L
R
G
L
R
G
FL
AGND
FR
AGND
CENTER
SUBWOOFER
SL
AGND
SR
to 1U-2928-1
E
to 1U-2871-1
CN9H
DB
DB
DGND
DGND
AL.B
AGND
A-LB
15V
-15V
toCHASS.
CN9B to 1U-2872-3
+B LINE
-B LINE
SIGNAL LINE

SCHEMATIC DIAGRAM - (5/11)

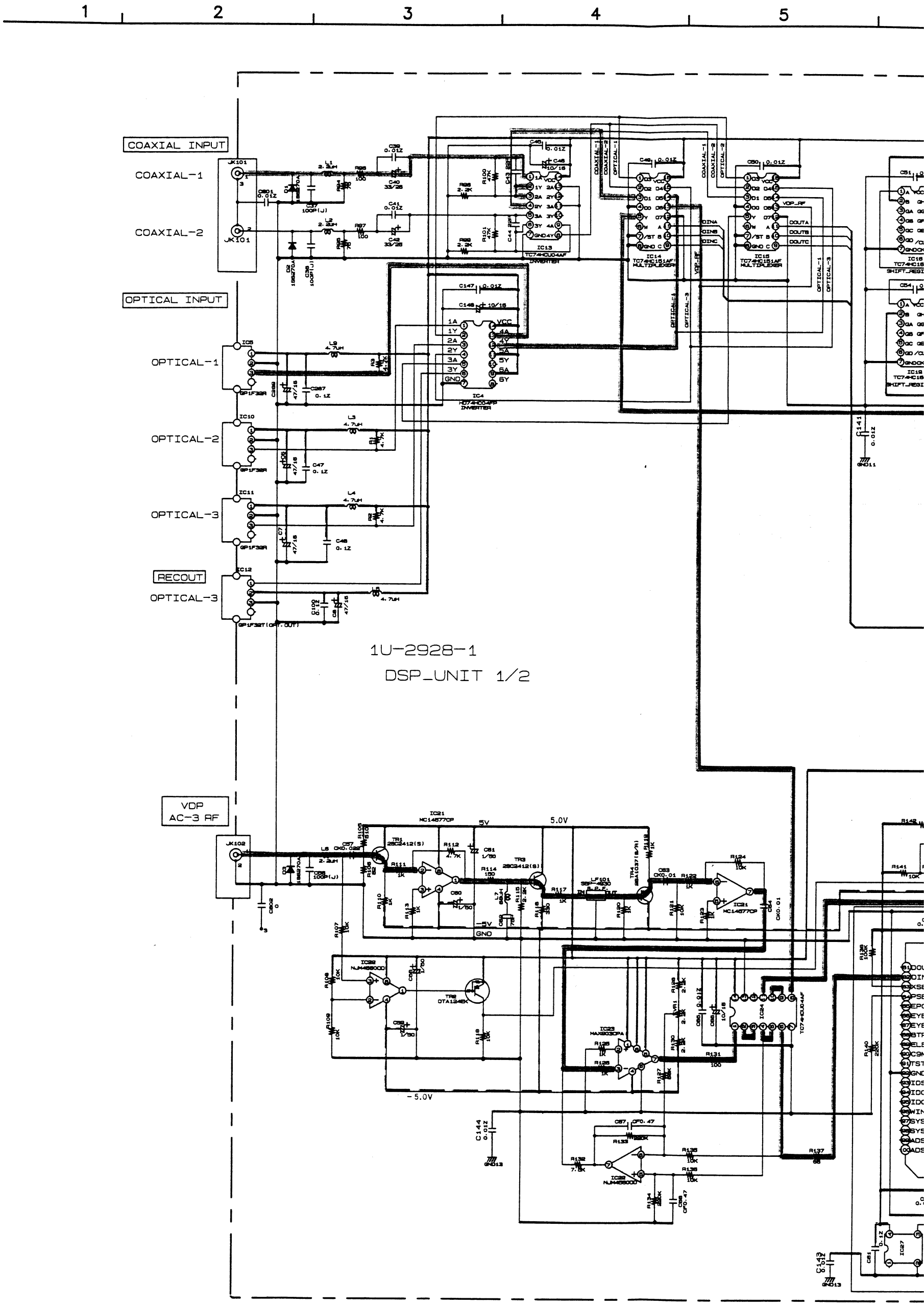

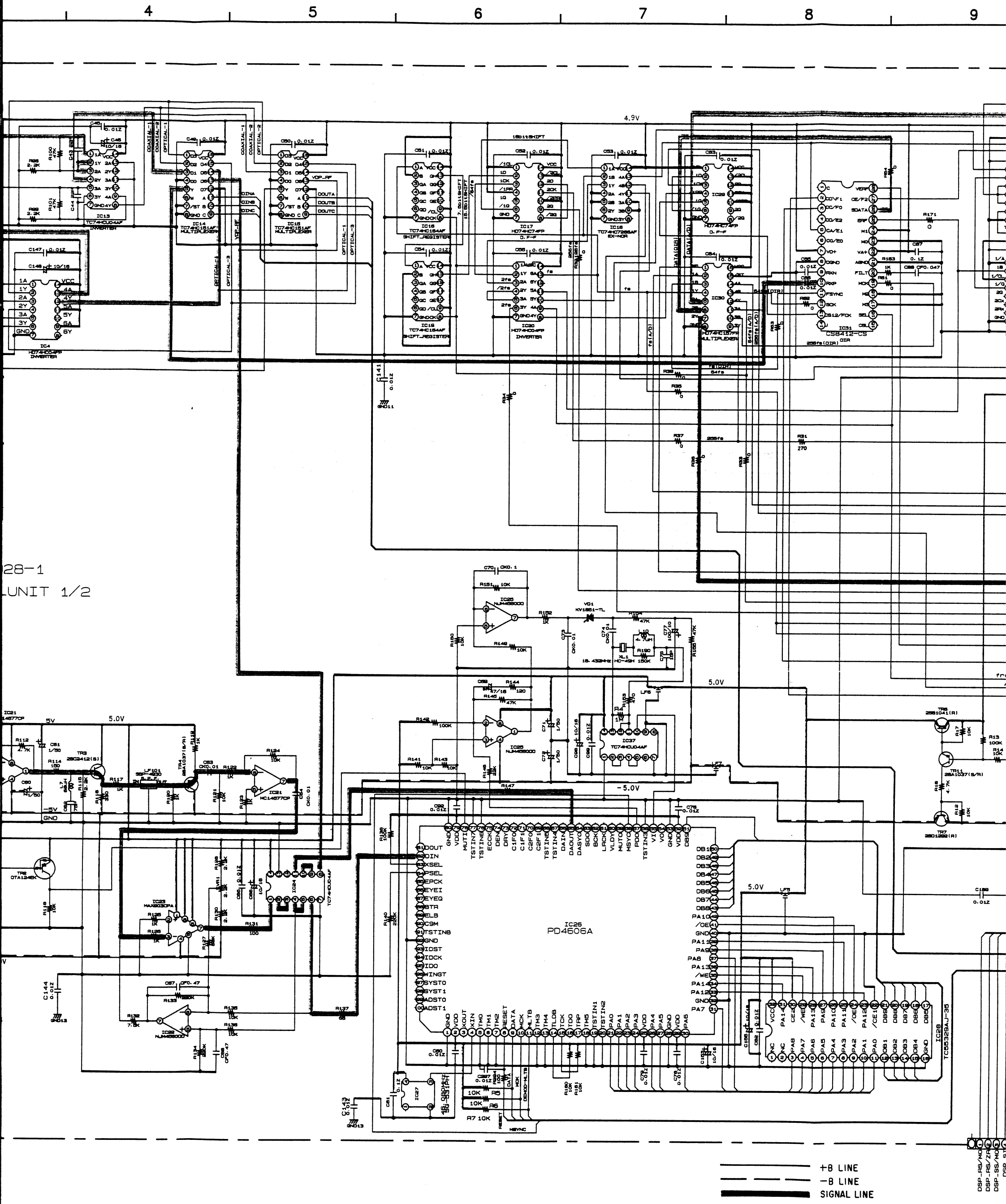

WARNING:
Parts marked with this symbol ⚠ ▒ have critical characteristics.
Use ONLY replacement parts recommended by the manufacturer.

CAUTION:
Before returning the unit to the customer, make sure you make either (1) a leakage current check or (2) a line to chassis resistance check. If the leakage current exceeds 0.5 milliamps, or if the resistance from chassis to either side of the power cord is less than 240 kohms, the unit is defective.

WARNING:
DO NOT return the unit to the customer until the problem is located and corrected.

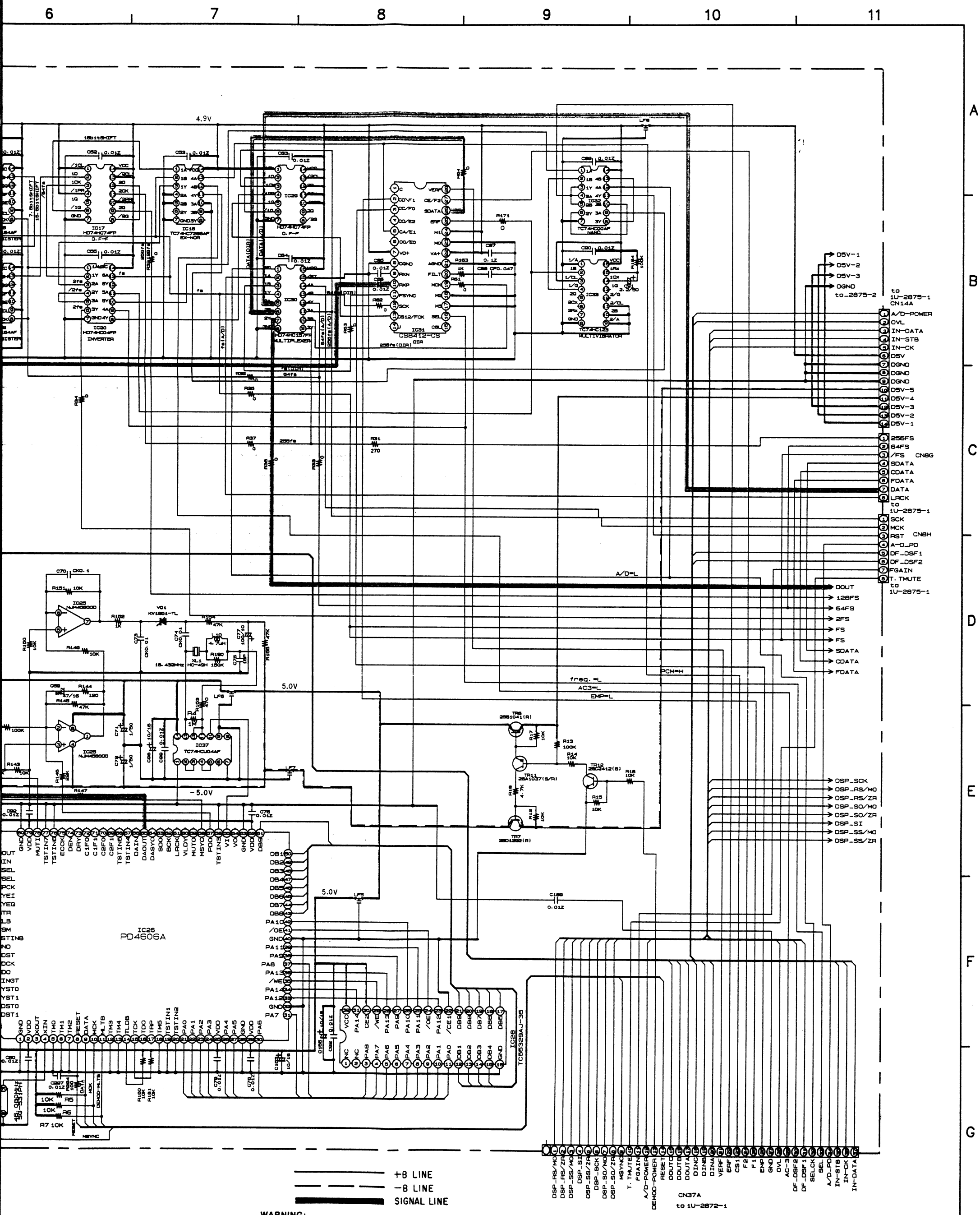

WARNING:
Parts marked with this symbol ⚠ ▒ have critical characteristics.
Use ONLY replacement parts recommended by the manufacturer.

CAUTION:
Before returning the unit to the customer, make sure you make either (1) a leakage current check or (2) a line to chassis resistance check. If the leakage current exceeds 0.5 milliamps, or if the resistance from chassis to either side of the power cord is less than 240 kohms, the unit is defective.

WARNING:
DO NOT return the unit to the customer until the problem is located and corrected.

NOTES
ALL RESISTANCE VALUES IN OHM. k=1,000 OHM, M=1,000,000 OHM
ALL CAPACITANCE VALUES IN MICRO FARAD. P=MICRO-MICRO FARAD
EACH VOLTAGE AND CURRENT ARE MEASURED AT NO SIGNAL INPUT CONDITION.
CIRCUIT AND PARTS ARE SUBJECT TO CHANGE WITHOUT PRIOR NOTICE.

SCHEMATIC DIAGRAM - (6/11)

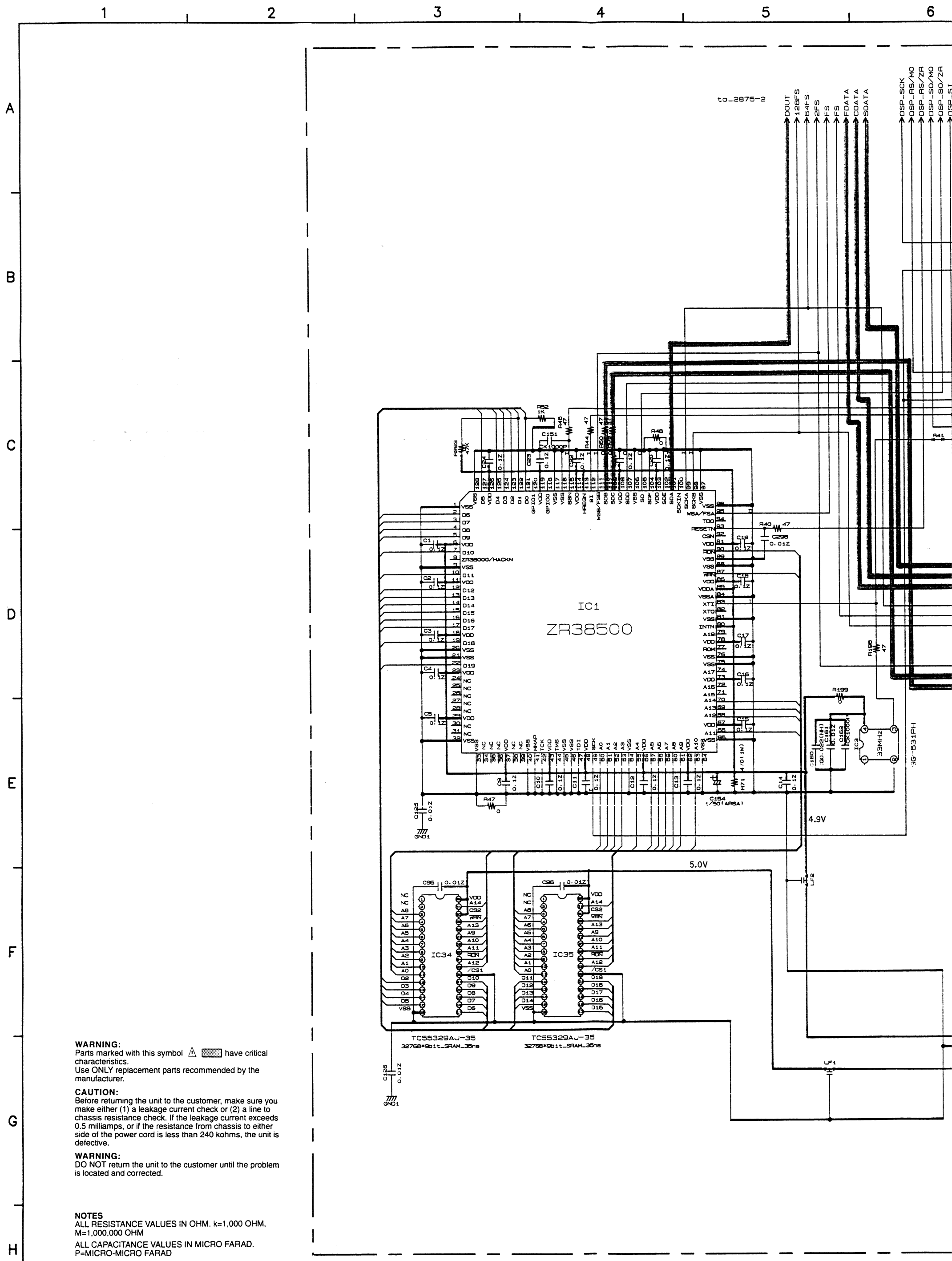

WARNING:
Parts marked with this symbol ⚠ ▒ have critical characteristics.
Use ONLY replacement parts recommended by the manufacturer.

CAUTION:
Before returning the unit to the customer, make sure you make either (1) a leakage current check or (2) a line to chassis resistance check. If the leakage current exceeds 0.5 milliamps, or if the resistance from chassis to either side of the power cord is less than 240 kohms, the unit is defective.

WARNING:
DO NOT return the unit to the customer until the problem is located and corrected.

NOTES
ALL RESISTANCE VALUES IN OHM. k=1,000 OHM, M=1,000,000 OHM

ALL CAPACITANCE VALUES IN MICRO FARAD. P=MICRO-MICRO FARAD

EACH VOLTAGE AND CURRENT ARE MEASURED AT NO SIGNAL INPUT CONDITION.

CIRCUIT AND PARTS ARE SUBJECT TO CHANGE WITHOUT PRIOR NOTICE.

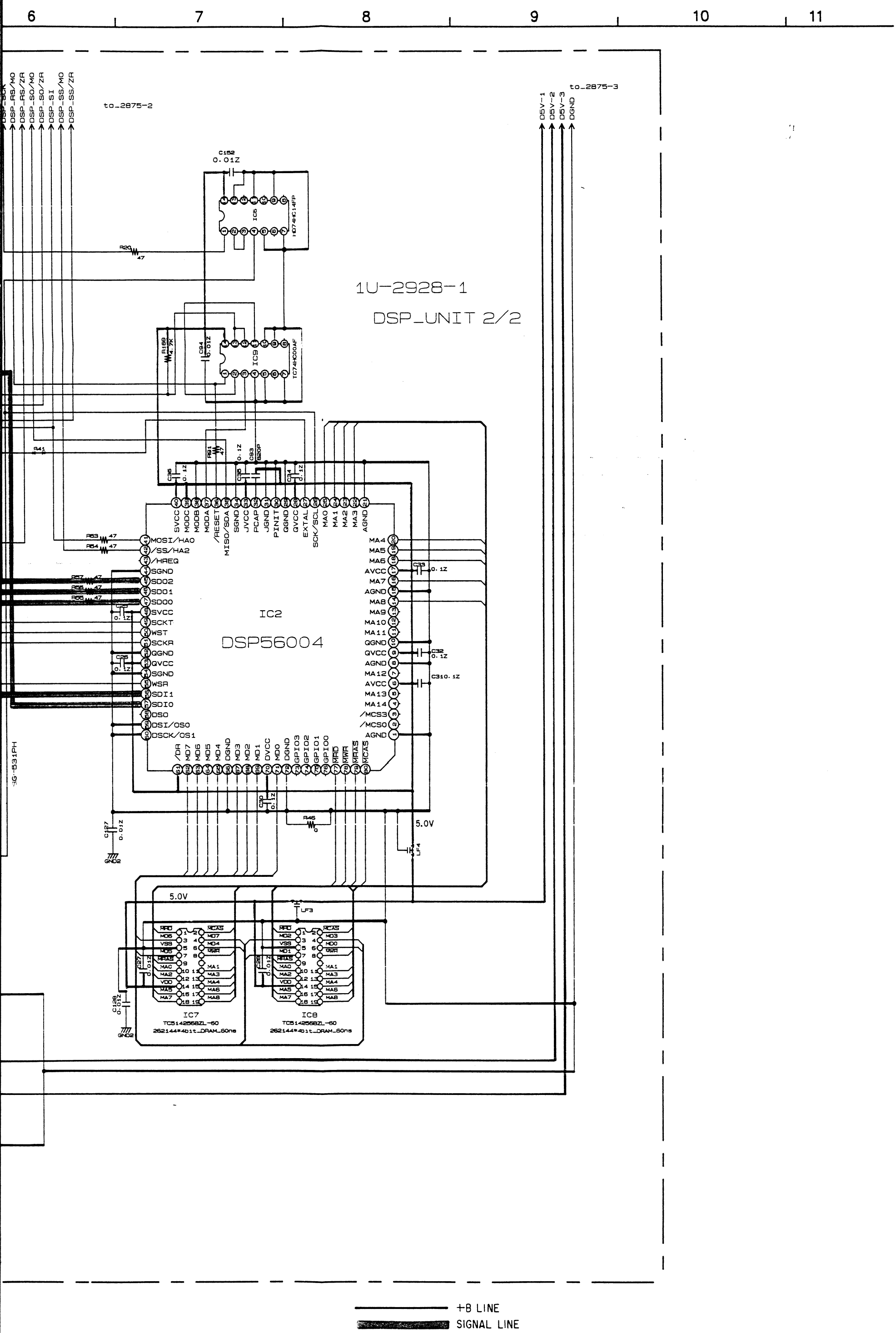

+B LINE

SIGNAL LINE

SCHEMATIC DIAGRAM - (7/11)

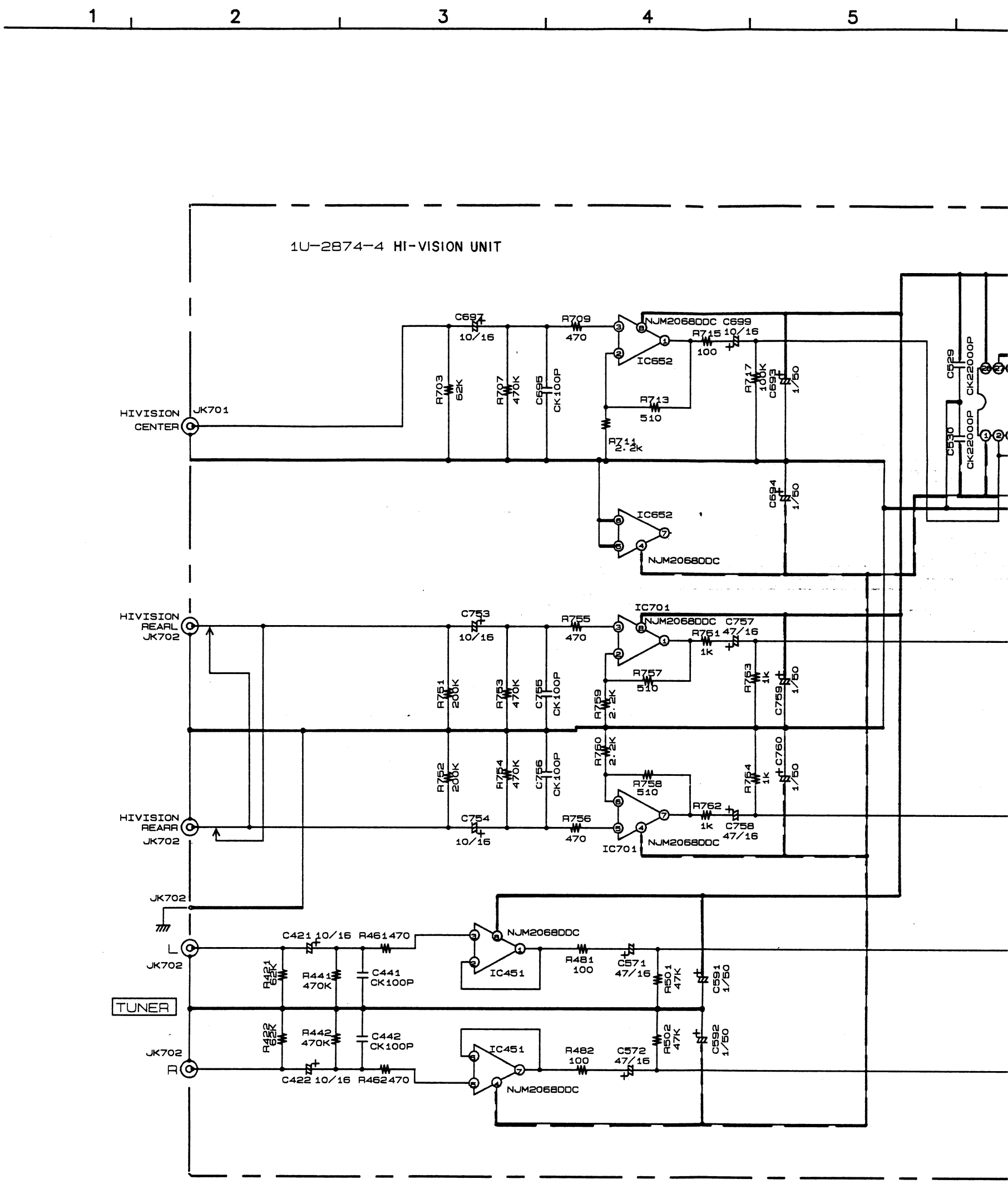

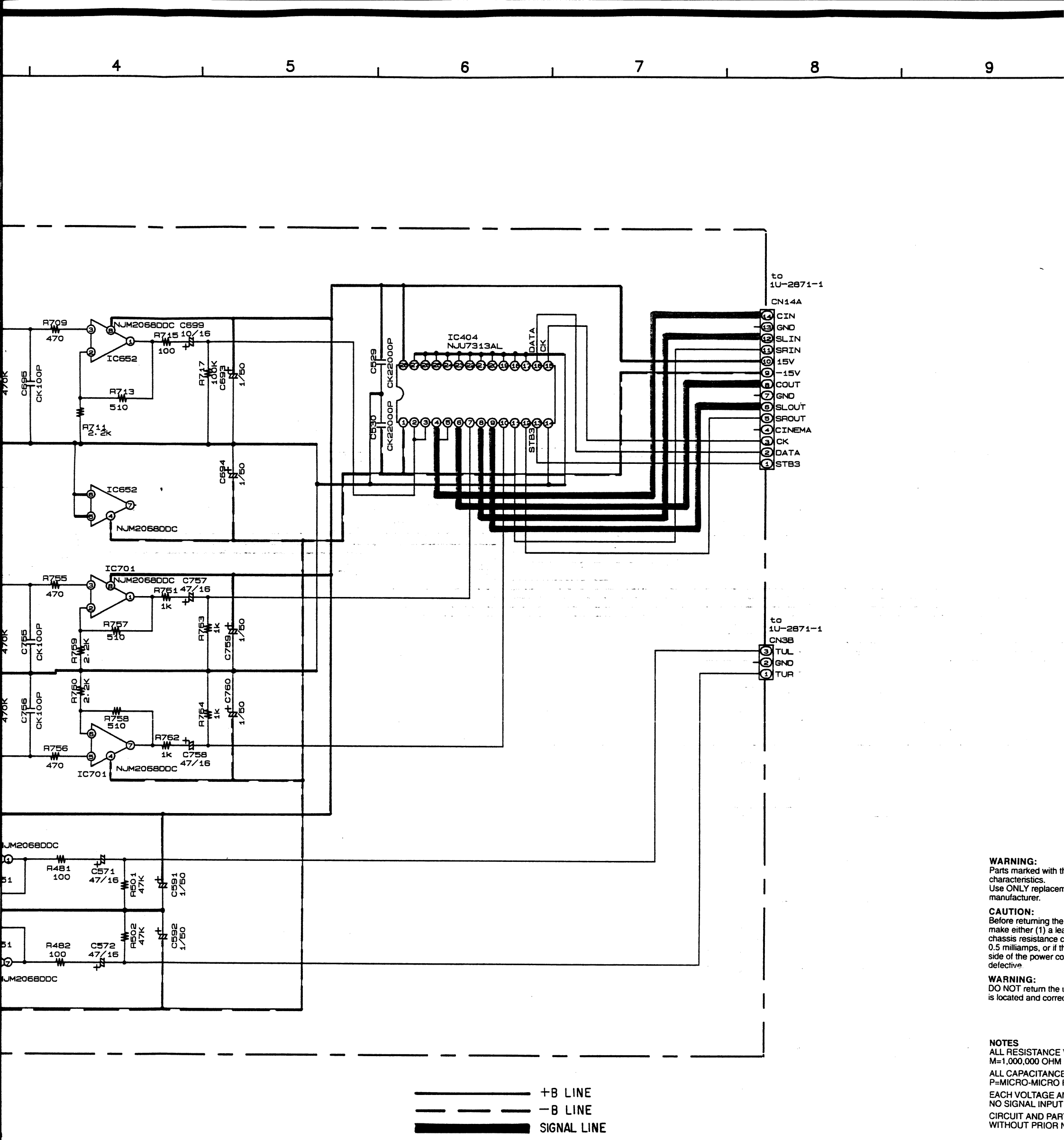

WARNING:
Parts marked with th
characteristics.
Use ONLY replacem
manufacturer.

CAUTION:
Before returning the
make either (1) a lea
chassis resistance c
0.5 milliamps, or if th
side of the power co
defective.

WARNING:
DO NOT return the u
is located and correc

NOTES
ALL RESISTANCE
M=1,000,000 OHM
ALL CAPACITANCE
P=MICRO-MICRO
EACH VOLTAGE A
NO SIGNAL INPUT
CIRCUIT AND PAR
WITHOUT PRIOR

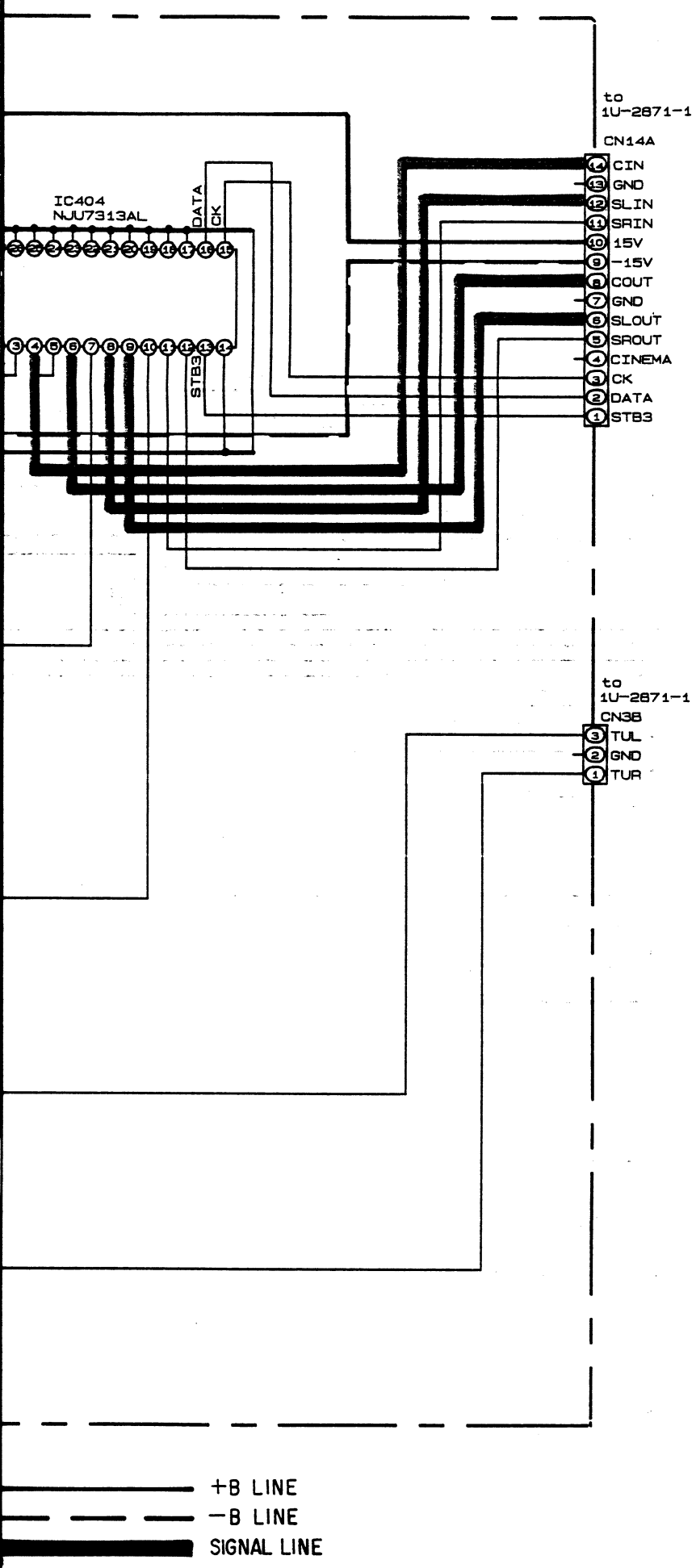

WARNING:
Parts marked with this symbol ⚠ ▒ have critical characteristics.
Use ONLY replacement parts recommended by the manufacturer.

CAUTION:
Before returning the unit to the customer, make sure you make either (1) a leakage current check or (2) a line to chassis resistance check. If the leakage current exceeds 0.5 milliamps, or if the resistance from chassis to either side of the power cord is less than 240 kohms, the unit is defective.

WARNING:
DO NOT return the unit to the customer until the problem is located and corrected.

NOTES
ALL RESISTANCE VALUES IN OHM. k=1,000 OHM, M=1,000,000 OHM

ALL CAPACITANCE VALUES IN MICRO FARAD. P=MICRO-MICRO FARAD

EACH VOLTAGE AND CURRENT ARE MEASURED AT NO SIGNAL INPUT CONDITION.

CIRCUIT AND PARTS ARE SUBJECT TO CHANGE WITHOUT PRIOR NOTICE.

SCHEMATIC DIAGRAM - (8/11)

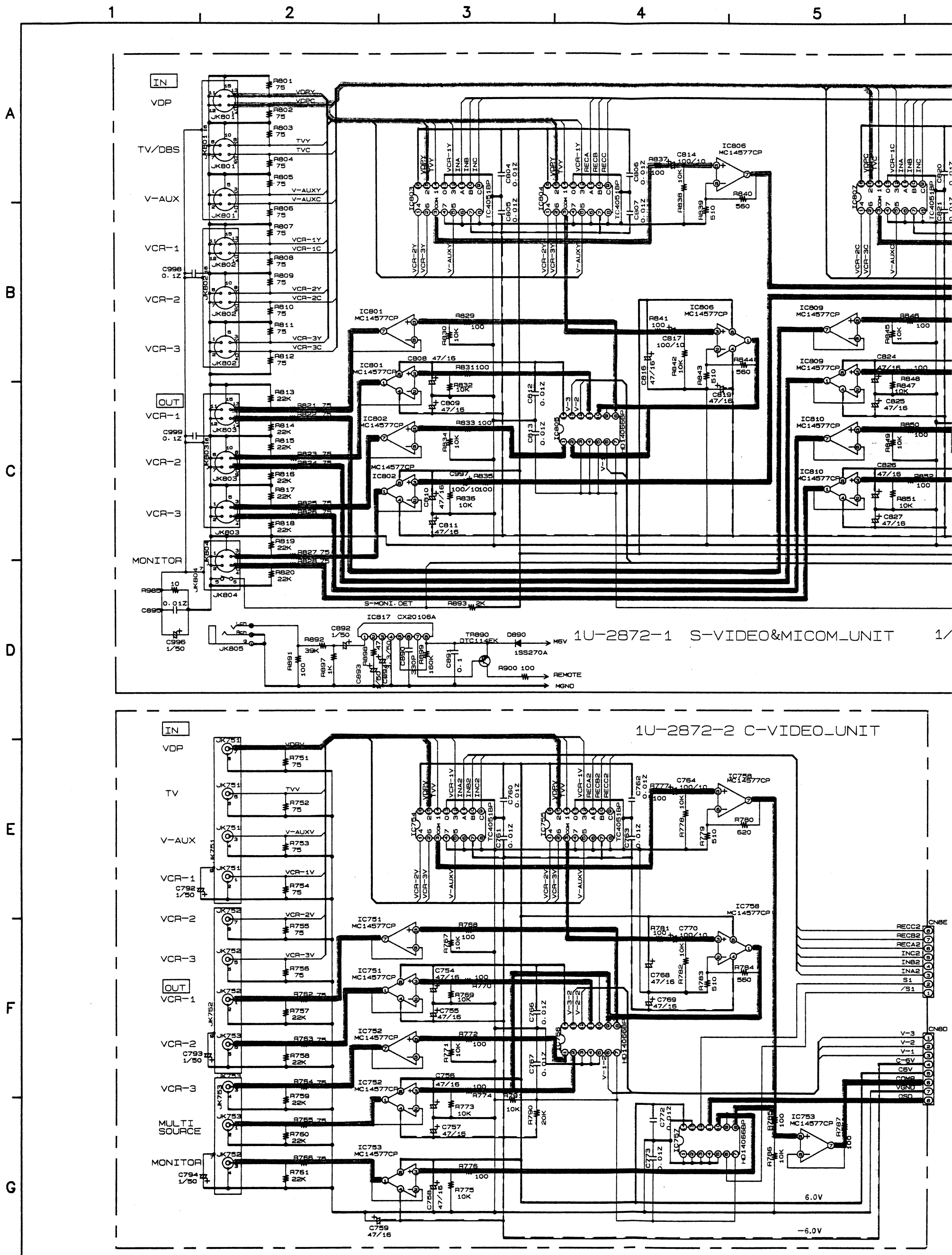

WARNING:
Parts marked with this symbol ⚠ ▒ have critical characteristics.
Use ONLY replacement parts recommended by the manufacturer.

CAUTION:
Before returning the unit to the customer, make sure you make either (1) a leakage current check or (2) a line to chassis resistance check. If the leakage current exceeds 0.5 milliamps, or if the resistance from chassis to either side of the power cord is less than 240 kohms, the unit is defective.

WARNING:
DO NOT return the unit to the customer until the problem is located and corrected.

NOTES
ALL RESISTANCE VALUES IN OHM. k=1,000 OHM, M=1,000,000 OHM

ALL CAPACITANCE VALUES IN MICRO FARAD. P=MICRO-MICRO FARAD

EACH VOLTAGE AND CURRENT ARE MEASURED AT NO SIGNAL INPUT CONDITION.

CIRCUIT AND PARTS ARE SUBJECT TO CHANGE WITHOUT PRIOR NOTICE.

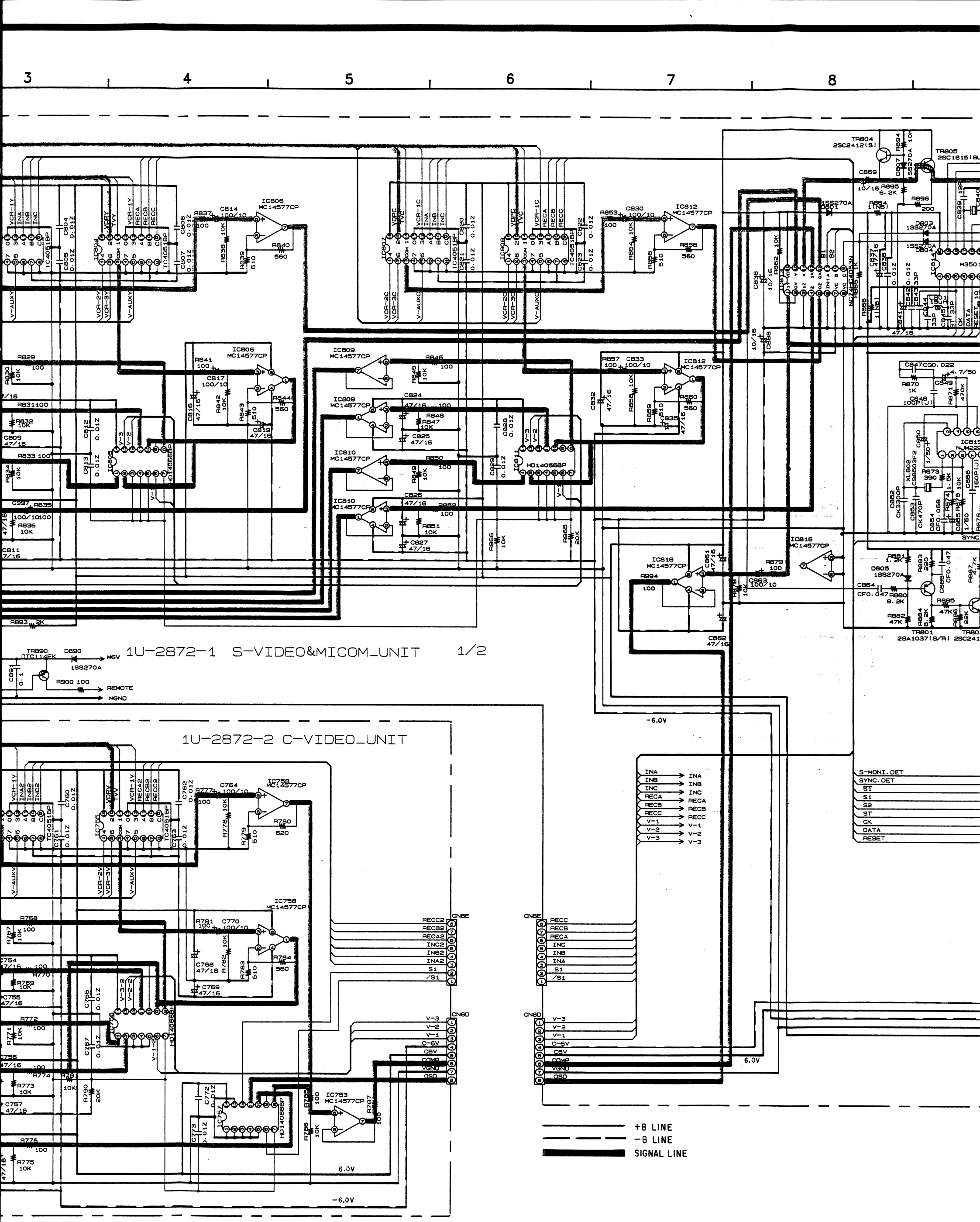

OTES

LL RESISTANCE VALUES IN OHM. k=1,000 OHM, =1,000,000 OHM

LL CAPACITANCE VALUES IN MICRO FARAD. =MICRO-MICRO FARAD

ACH VOLTAGE AND CURRENT ARE MEASURED AT O SIGNAL INPUT CONDITION.

IRCUIT AND PARTS ARE SUBJECT TO CHANGE ITHOUT PRIOR NOTICE.

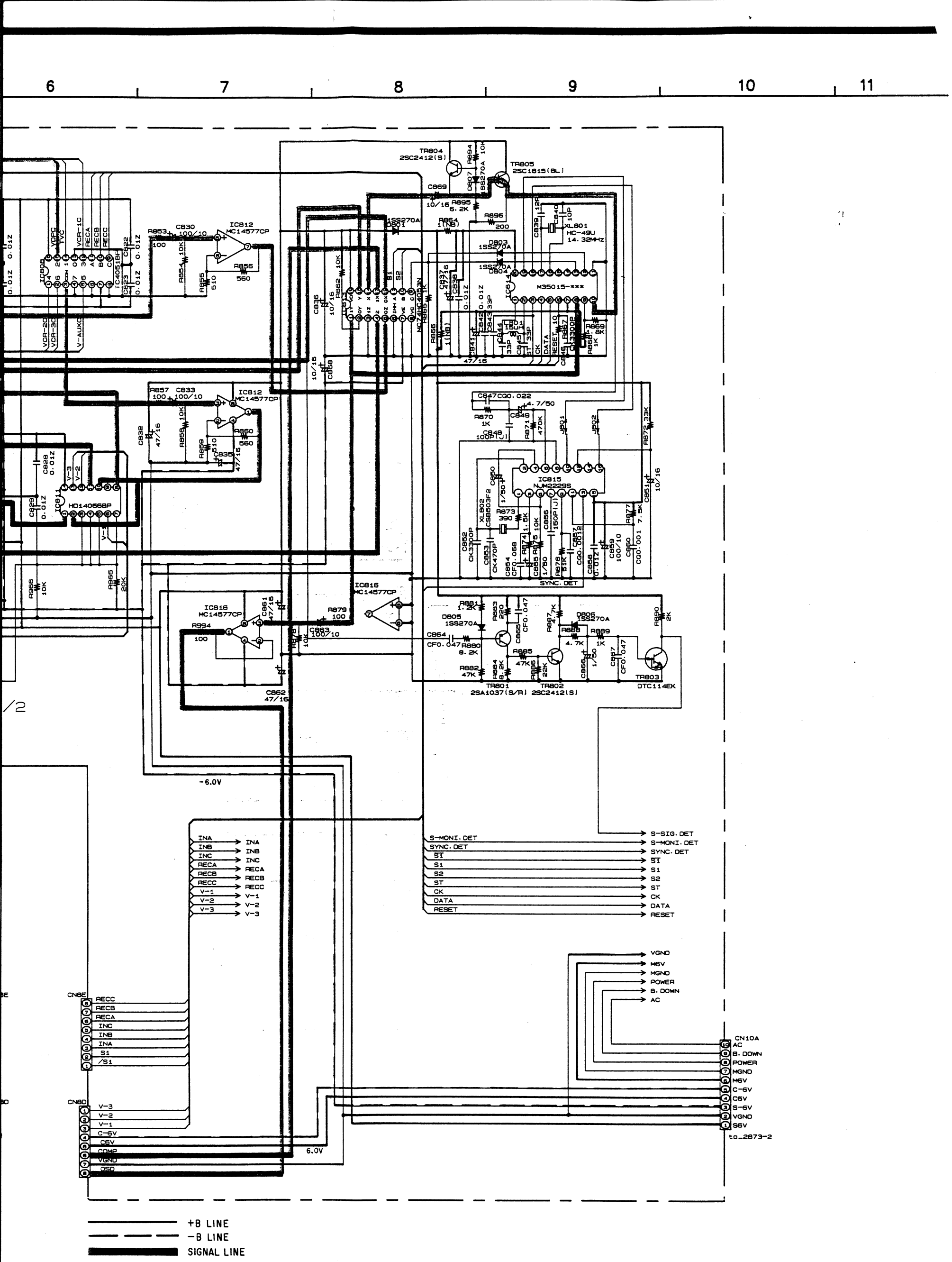
6
7
8
9
10
11
TR804
2SC2412(S)
TR805
2SC1815(BL)
IC812
MC14577CP
IC814
M35015-***
IC815
NJM2229S
IC816
MC14577CP
IC811
HD140568P
IC808
TC4051BP
XL801
HC-49U
14.32MHz
TR801
2SA1037(S/R)
TR802
2SC2412(S)
TR803
DTC114EK
SYNC. DET
-6.0V
6.0V
CN8E
CN8D
CN10A
to_2873-2
INA
INB
INC
RECA
RECB
RECC
V-1
V-2
V-3
S1
/S1
C-6V
C6V
COMP
VGND
OSD
S-MONI. DET
SYNC. DET
ST
CK
DATA
RESET
S-SIG. DET
M6V
MGND
POWER
B. DOWN
AC
S-6V
S6V
+B LINE
-B LINE
SIGNAL LINE

SCHEMATIC DIAGRAM - (9/11)

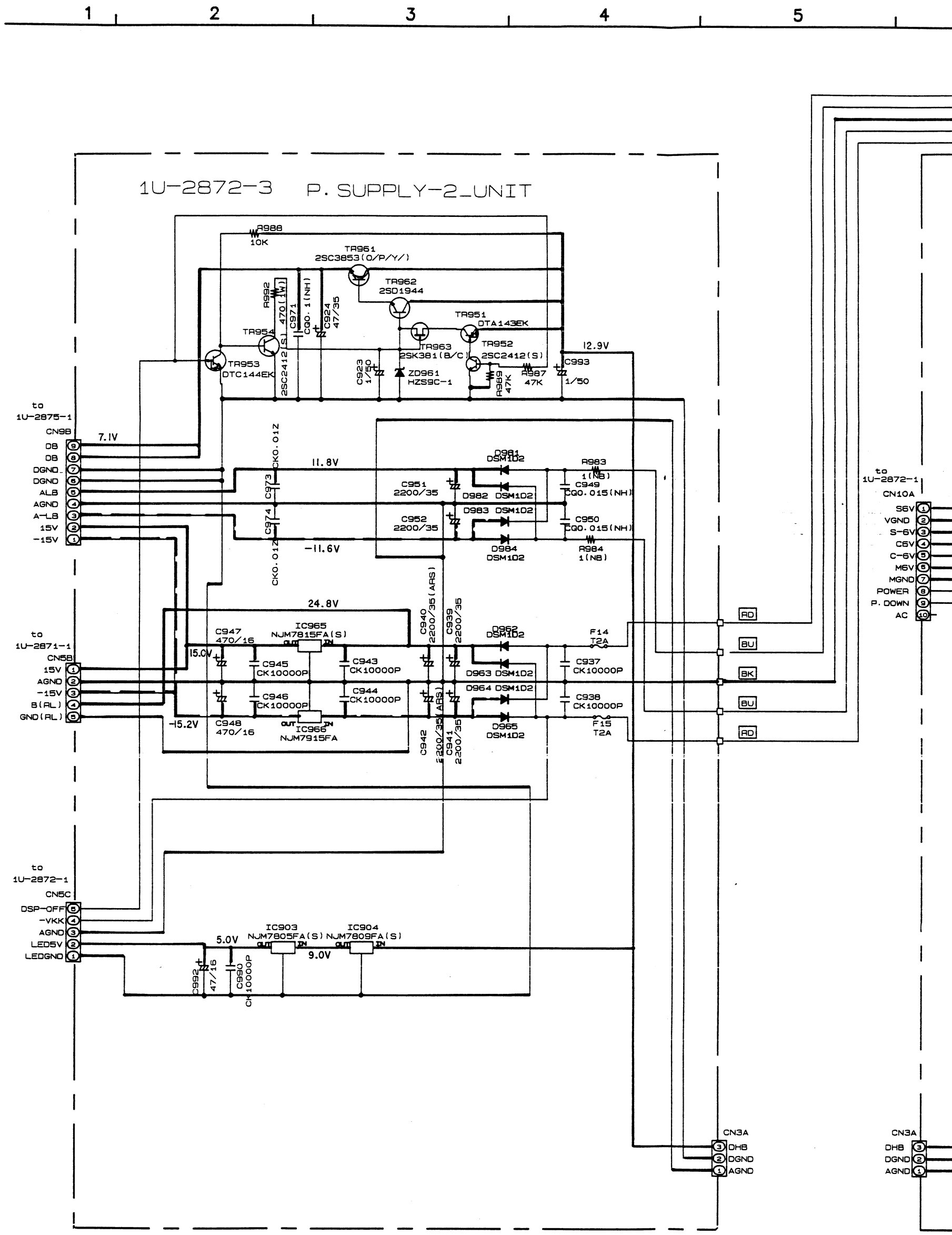

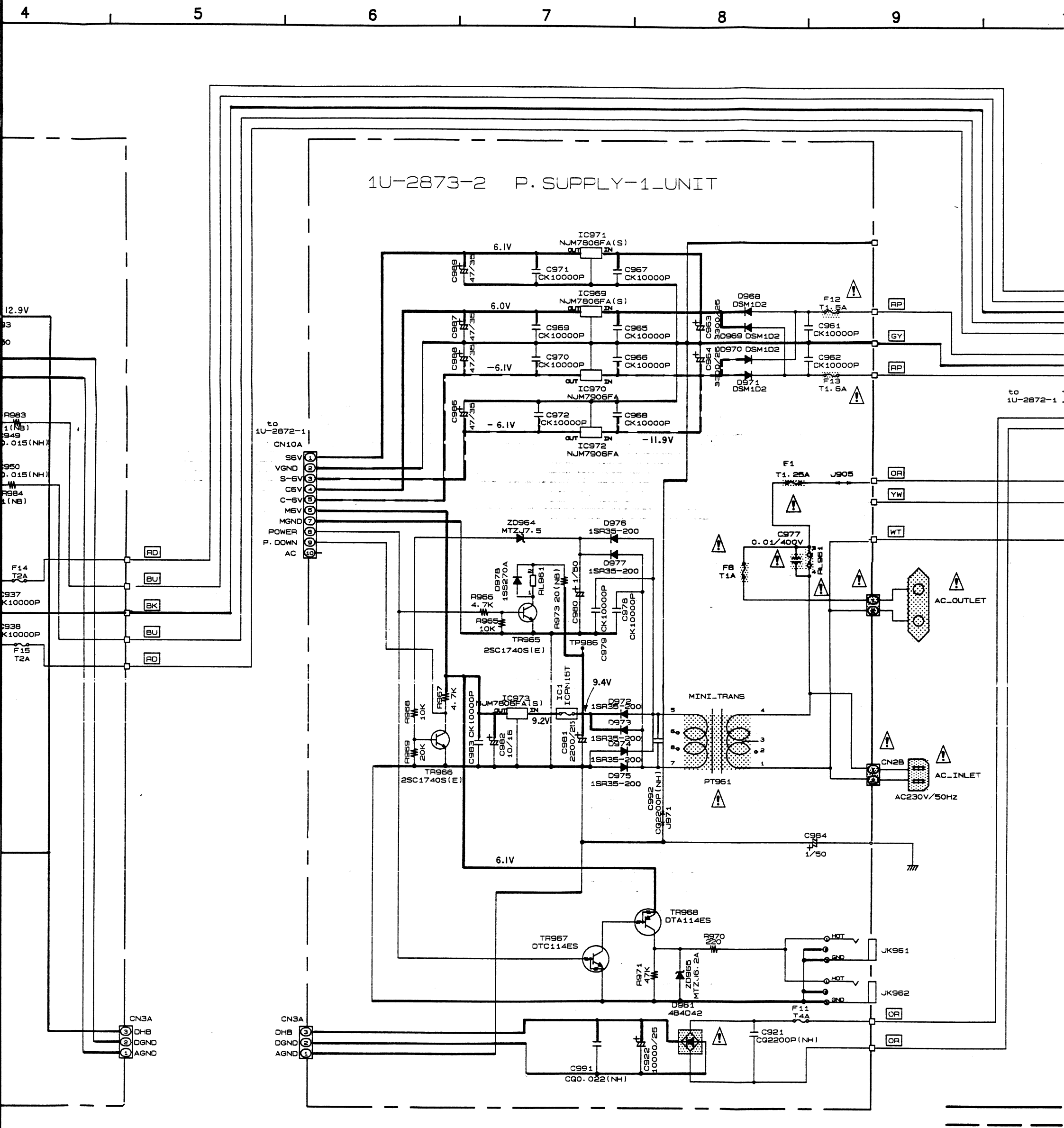

NOTES

ALL RESISTANCE VALUES IN OHM. k=1,000 OHM, M=1,000,000 OHM

ALL CAPACITANCE VALUES IN MICRO FARAD. P=MICRO-MICRO FARAD

EACH VOLTAGE AND CURRENT ARE MEASURED AT NO SIGNAL INPUT CONDITION.

CIRCUIT AND PARTS ARE SUBJECT TO CHANGE WITHOUT PRIOR NOTICE.

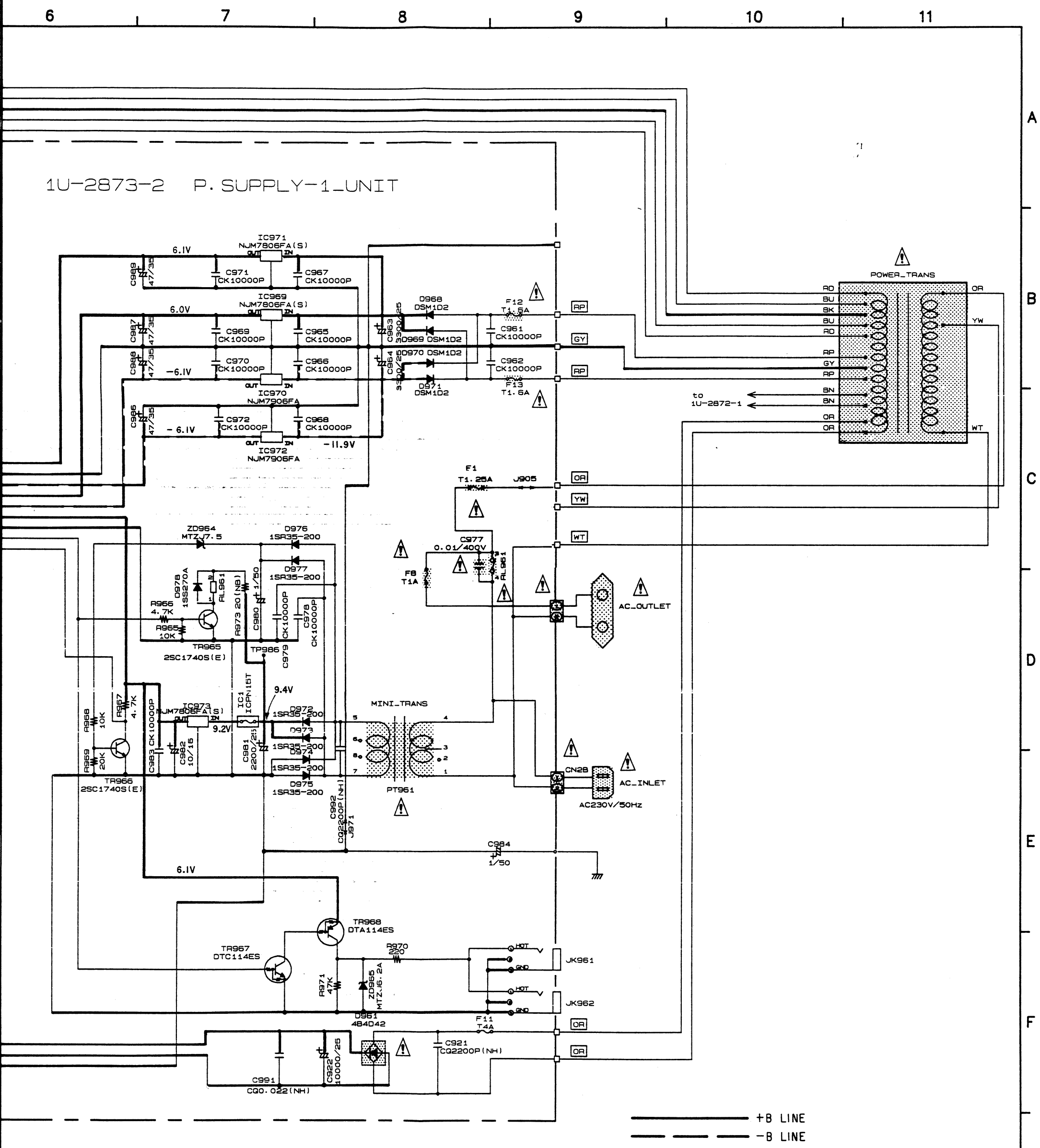

NOTES

ALL RESISTANCE VALUES IN OHM. k=1,000 OHM, M=1,000,000 OHM

ALL CAPACITANCE VALUES IN MICRO FARAD. P=MICRO-MICRO FARAD

EACH VOLTAGE AND CURRENT ARE MEASURED AT NO SIGNAL INPUT CONDITION.

CIRCUIT AND PARTS ARE SUBJECT TO CHANGE WITHOUT PRIOR NOTICE.

WARNING:
Parts marked with this symbol ⚠ ▒ have critical characteristics.
Use ONLY replacement parts recommended by the manufacturer.

CAUTION:
Before returning the unit to the customer, make sure you make either (1) a leakage current check or (2) a line to chassis resistance check. If the leakage current exceeds 0.5 milliamps, or if the resistance from chassis to either side of the power cord is less than 240 kohms, the unit is defective.

WARNING:
DO NOT return the unit to the customer until the problem is located and corrected.

SCHEMATIC DIAGRAM - (10/11)

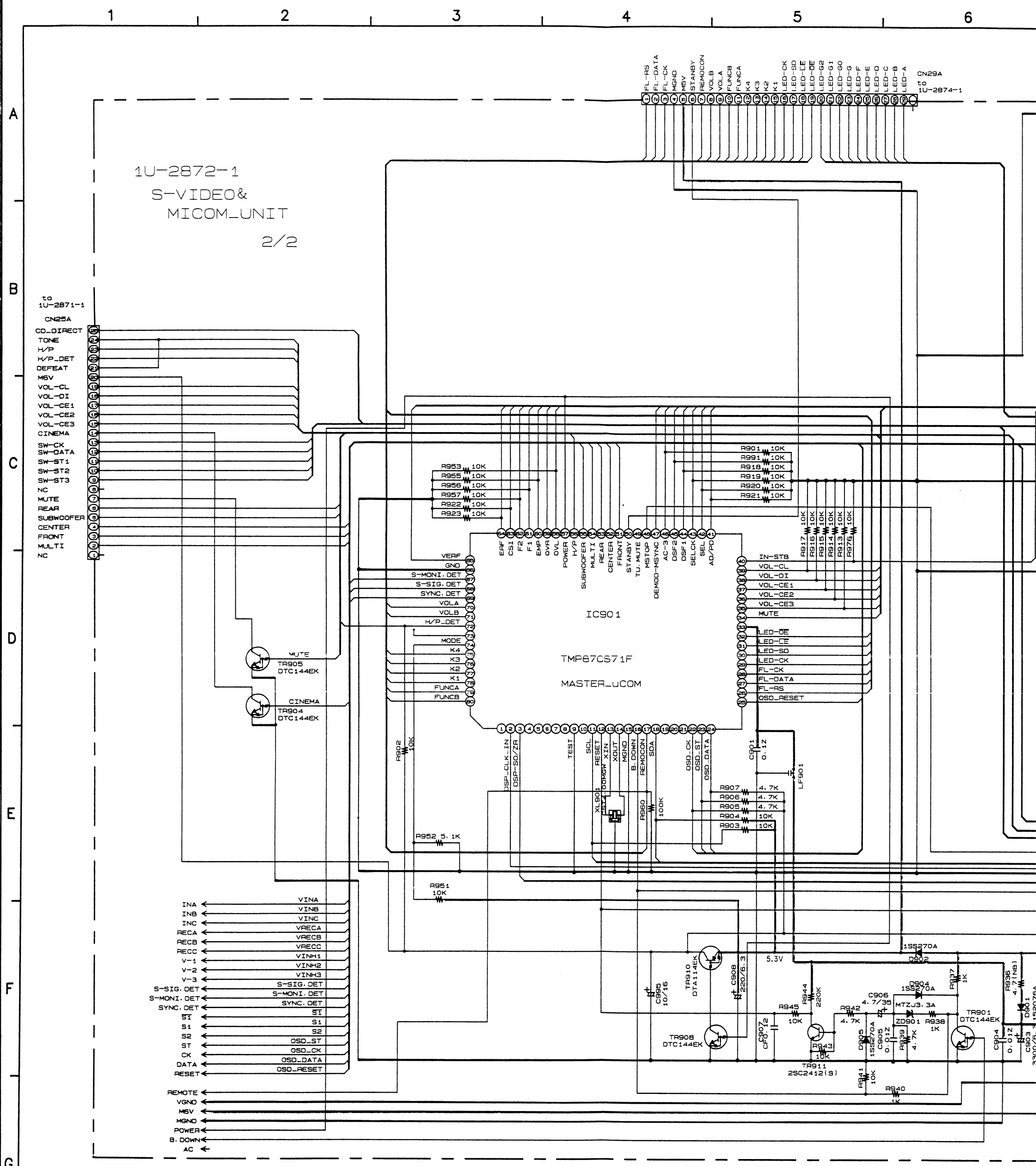

WARNING:
Parts marked with this symbol ⚠ ▒ have critical characteristics.
Use ONLY replacement parts recommended by the manufacturer.

CAUTION:
Before returning the unit to the customer, make sure you make either (1) a leakage current check or (2) a line to chassis resistance check. If the leakage current exceeds 0.5 milliamps, or if the resistance from chassis to either side of the power cord is less than 240 kohms, the unit is defective.

WARNING:
DO NOT return the unit to the customer until the problem is located and corrected.

NOTES
ALL RESISTANCE VALUES IN OHM. k=1,000 OHM, M=1,000,000 OHM

ALL CAPACITANCE VALUES IN MICRO FARAD. P=MICRO-MICRO FARAD

EACH VOLTAGE AND CURRENT ARE MEASURED AT NO SIGNAL INPUT CONDITION.

CIRCUIT AND PARTS ARE SUBJECT TO CHANGE WITHOUT PRIOR NOTICE.

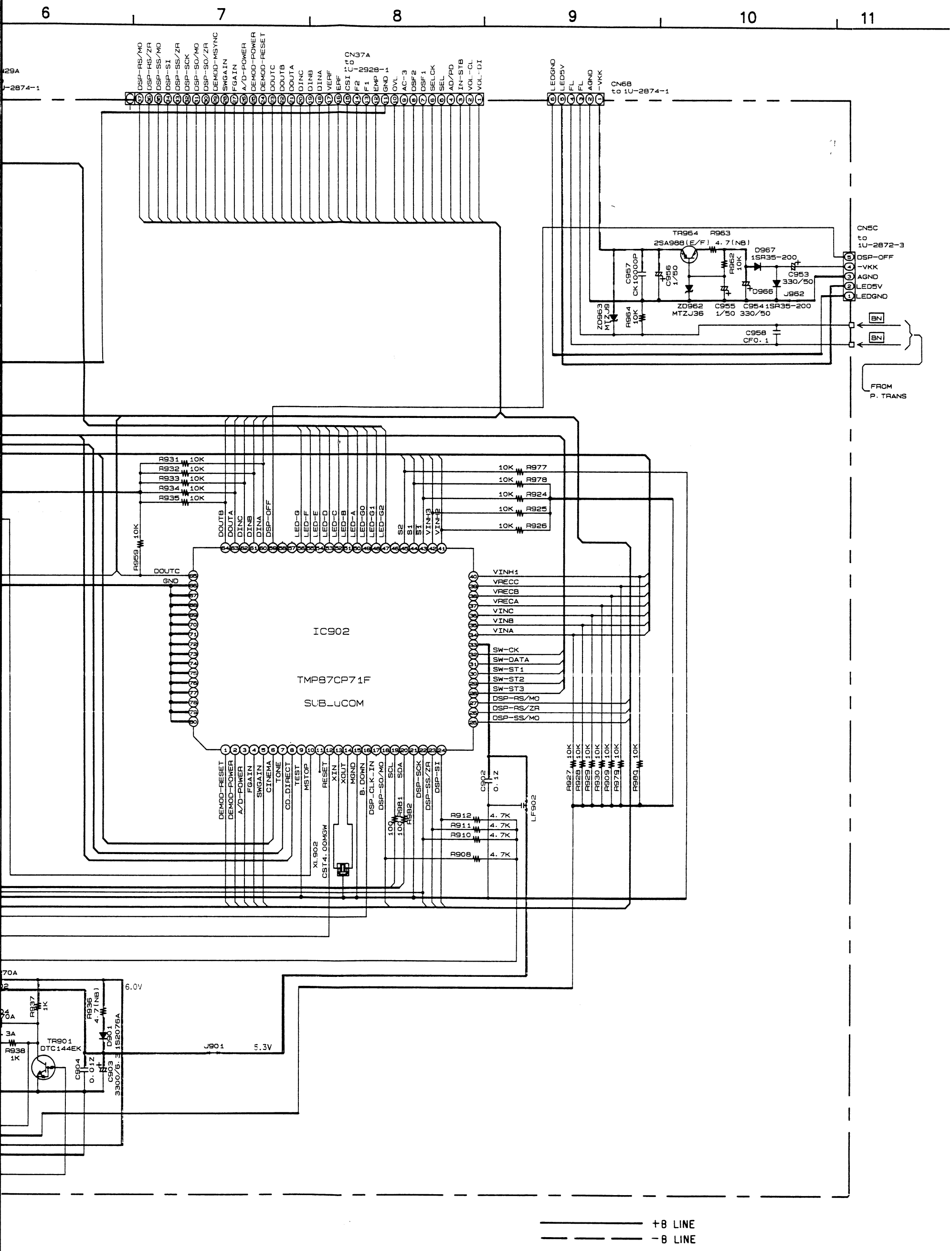
6
7
8
9
10
11
CN37A
to
1U-2928-1
CN68
to 1U-2874-1
CN5C
to
1U-2872-3
DSP-OFF
-VKK
AGND
LED5V
LEDGND
FROM
P. TRANS
IC902
TMP87CP71F
SUB_uCOM
TR964
2SA988(E/F)
TR901
DTC144EK
J901
5.3V
6.0V
XL902
CST4.00MGW
LF902
+B LINE
-B LINE

SCHEMATIC DIAGRAM - (11/11)

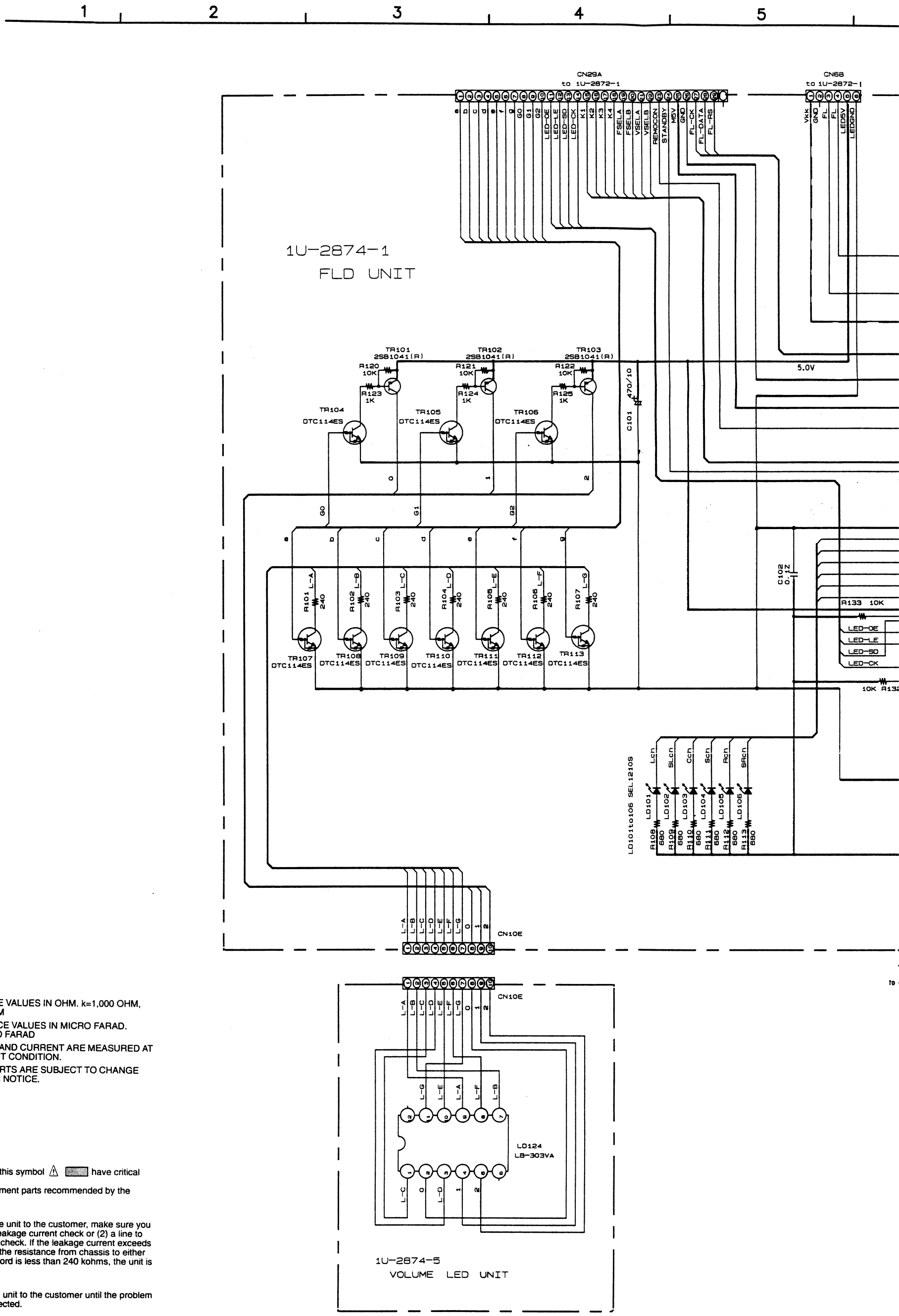

NOTES

ALL RESISTANCE VALUES IN OHM. k=1,000 OHM, M=1,000,000 OHM

ALL CAPACITANCE VALUES IN MICRO FARAD. P=MICRO-MICRO FARAD

EACH VOLTAGE AND CURRENT ARE MEASURED AT NO SIGNAL INPUT CONDITION.

CIRCUIT AND PARTS ARE SUBJECT TO CHANGE WITHOUT PRIOR NOTICE.

WARNING:
Parts marked with this symbol ⚠ ▒ have critical characteristics.
Use ONLY replacement parts recommended by the manufacturer.

CAUTION:
Before returning the unit to the customer, make sure you make either (1) a leakage current check or (2) a line to chassis resistance check. If the leakage current exceeds 0.5 milliamps, or if the resistance from chassis to either side of the power cord is less than 240 kohms, the unit is defective.

WARNING:
DO NOT return the unit to the customer until the problem is located and corrected.

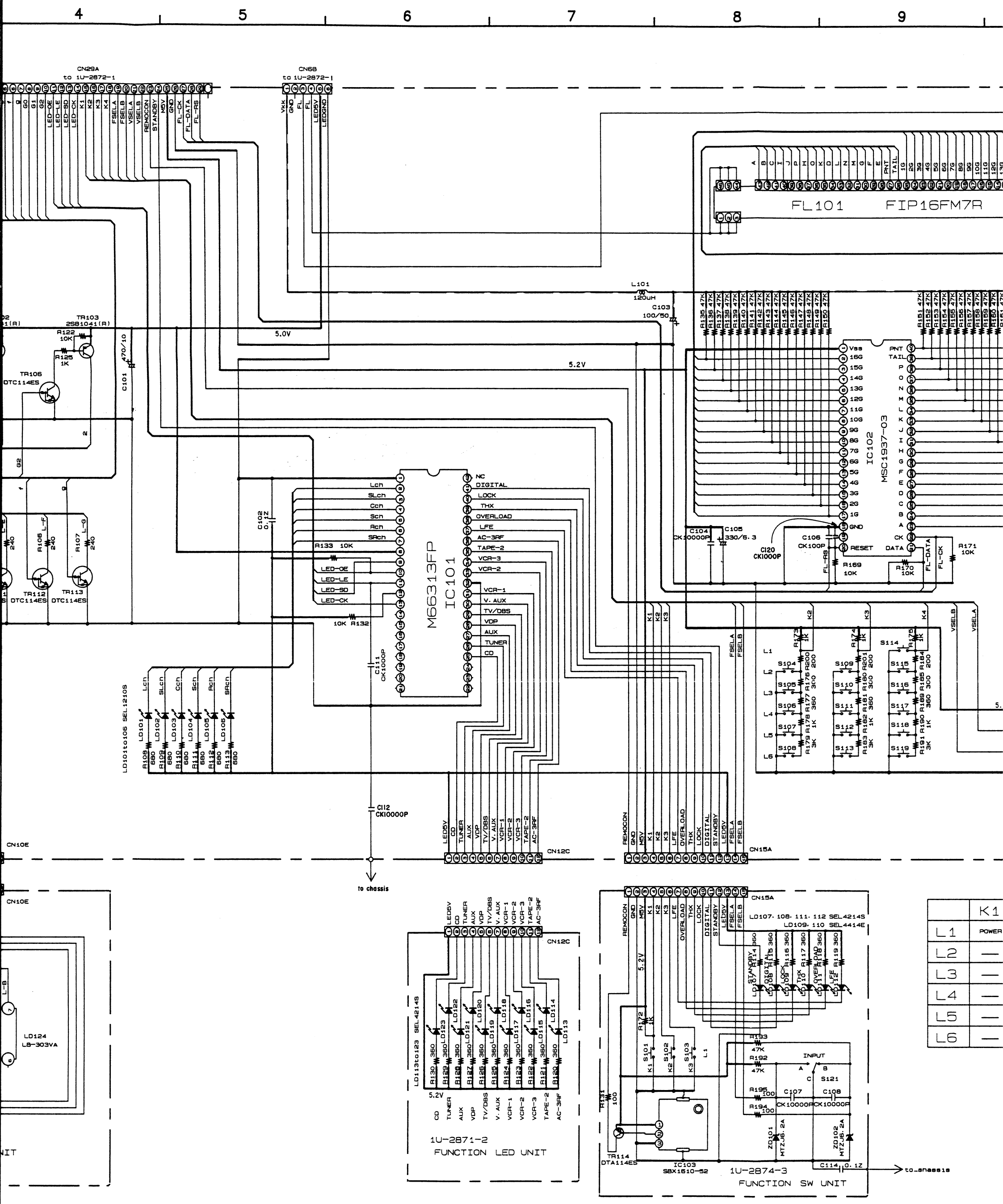
CN29A
to 1U-2872-1
CN68
to 1U-2872-1
FL101 FIP16FM7R
IC101 M66313FP
IC102 MSC1937-03
TR103 2SB1041(R)
TR106 DTC114ES
TR112 DTC114ES
TR113 DTC114ES
LD124 LB-303VA
LD101to106 SEL1210S
CN10E
CN12C
CN15A
to chassis
1U-2871-2
FUNCTION LED UNIT
LD113to123 SEL4214S
LD107. 108. 111. 112 SEL4214S
LD109. 110 SEL4414E
TR114 DTA114ES
IC103 S8X1610-52
1U-2874-3
FUNCTION SW UNIT
to chassis
K1
POWER
L1
L2
L3
L4
L5
L6

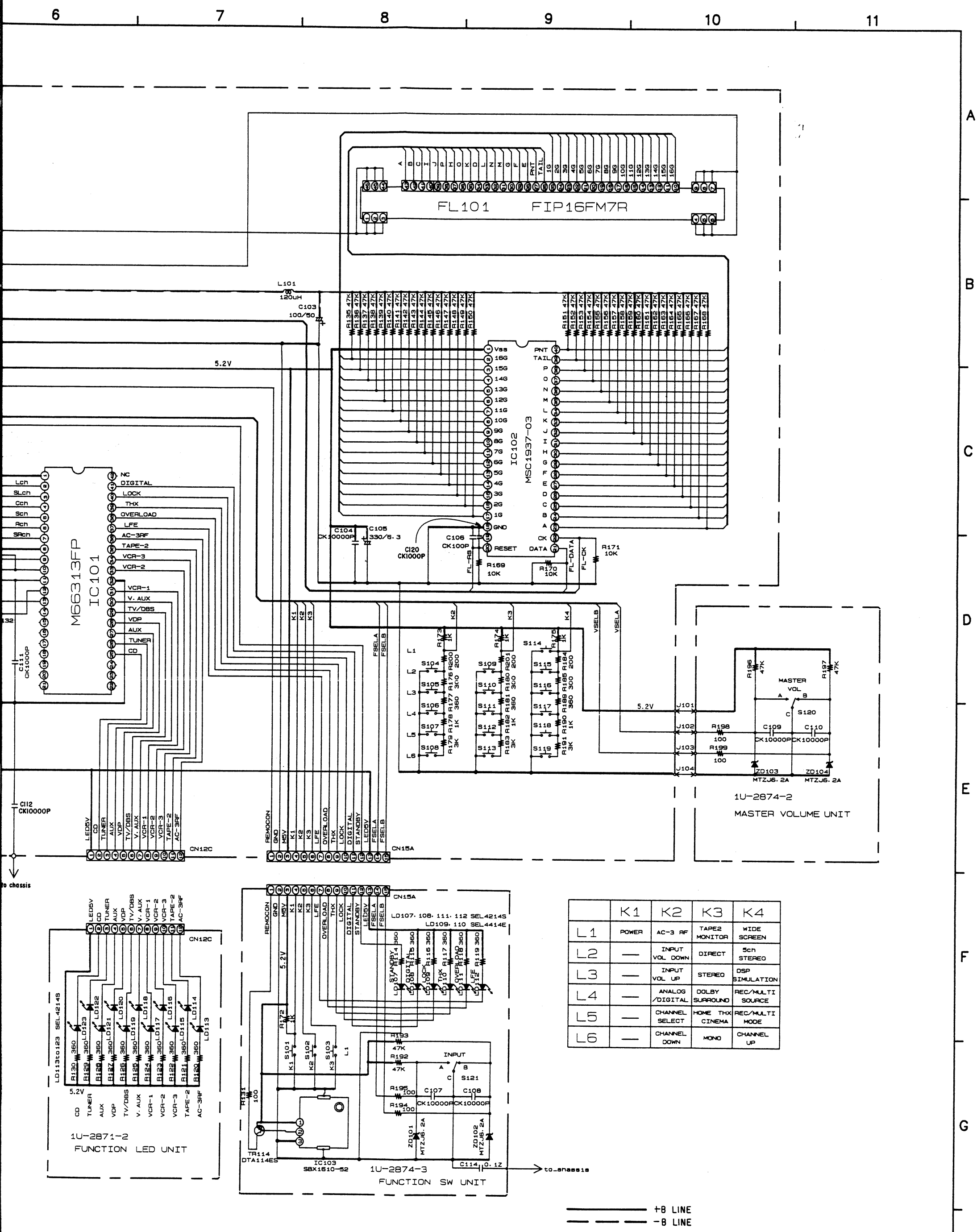

	K1	K2	K3	K4
L1	POWER	AC-3 RF	TAPE2 MONITOR	WIDE SCREEN
L2	—	INPUT VOL DOWN	DIRECT	5ch STEREO
L3	—	INPUT VOL UP	STEREO	DSP SIMULATION
L4	—	ANALOG /DIGITAL	DOLBY SURROUND	REC/MULTI SOURCE
L5	—	CHANNEL SELECT	HOME THX CINEMA	REC/MULTI MODE
L6	—	CHANNEL DOWN	MONO	CHANNEL UP

EXPLODED VIEW OF CHASSIS AND CABINET

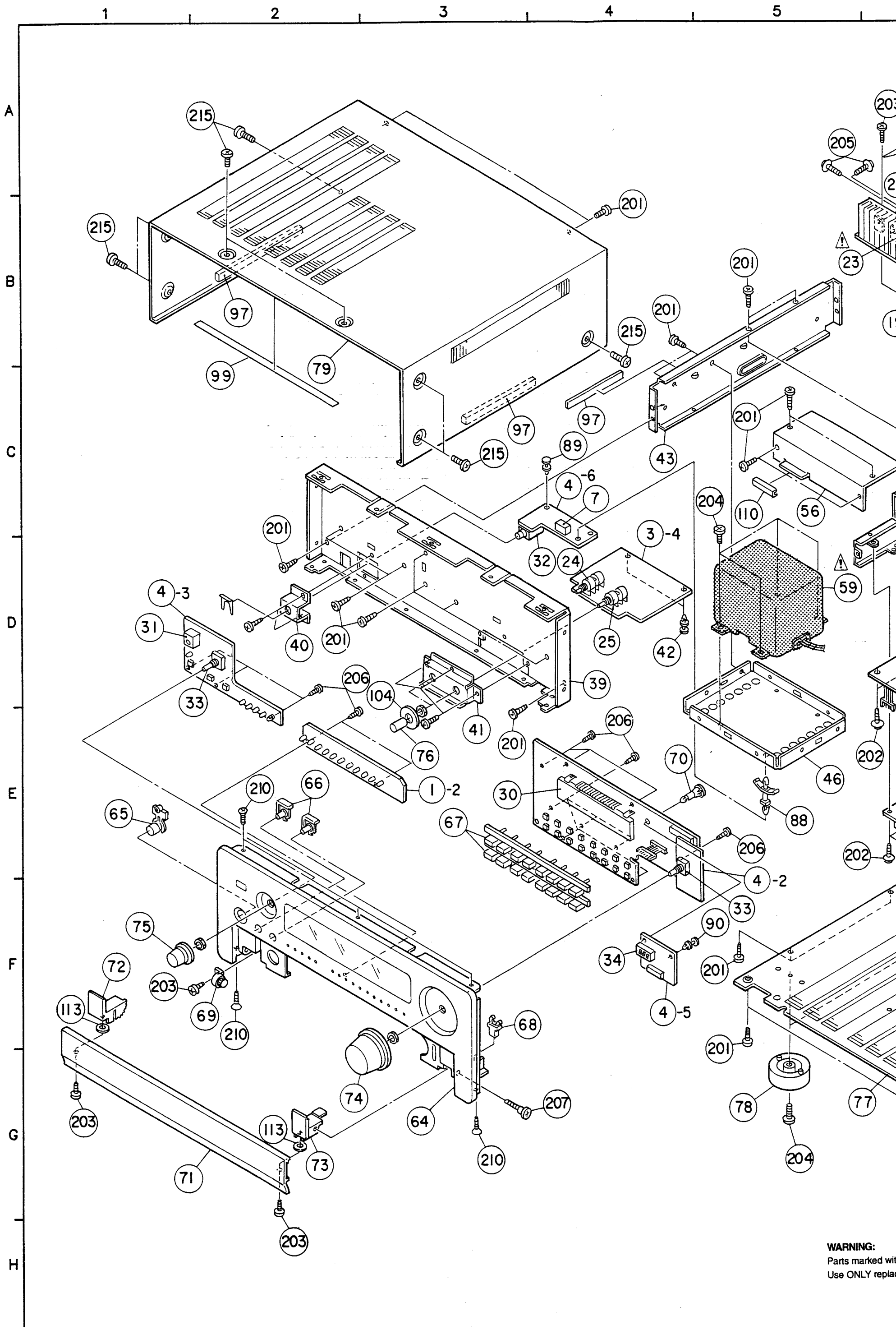

WARNING:
Parts marked wit
Use ONLY replac

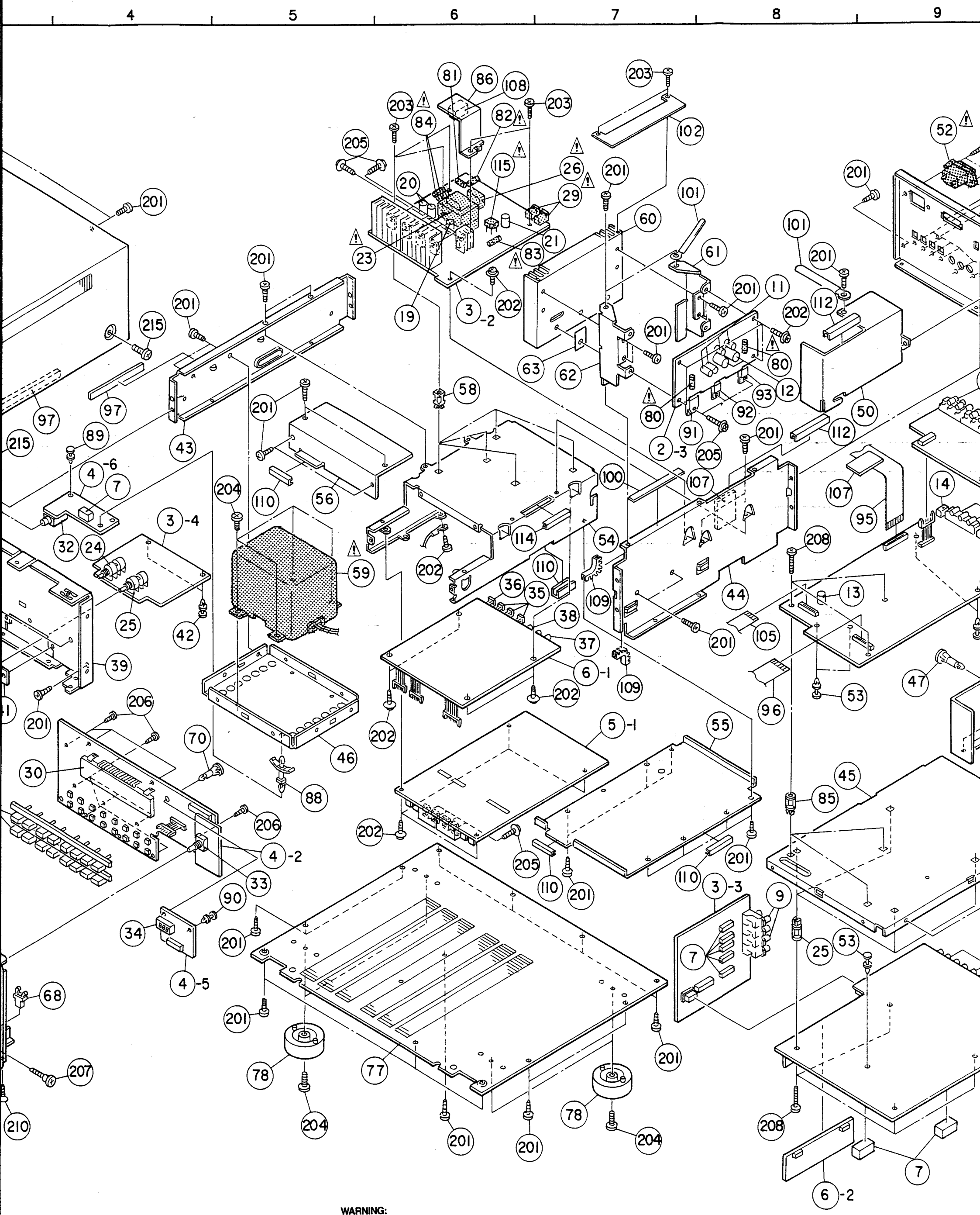

WARNING:
Parts marked with this symbol ⚠ ▬ have critical characteristics.
Use ONLY replacement parts recommended by the manufacturer.

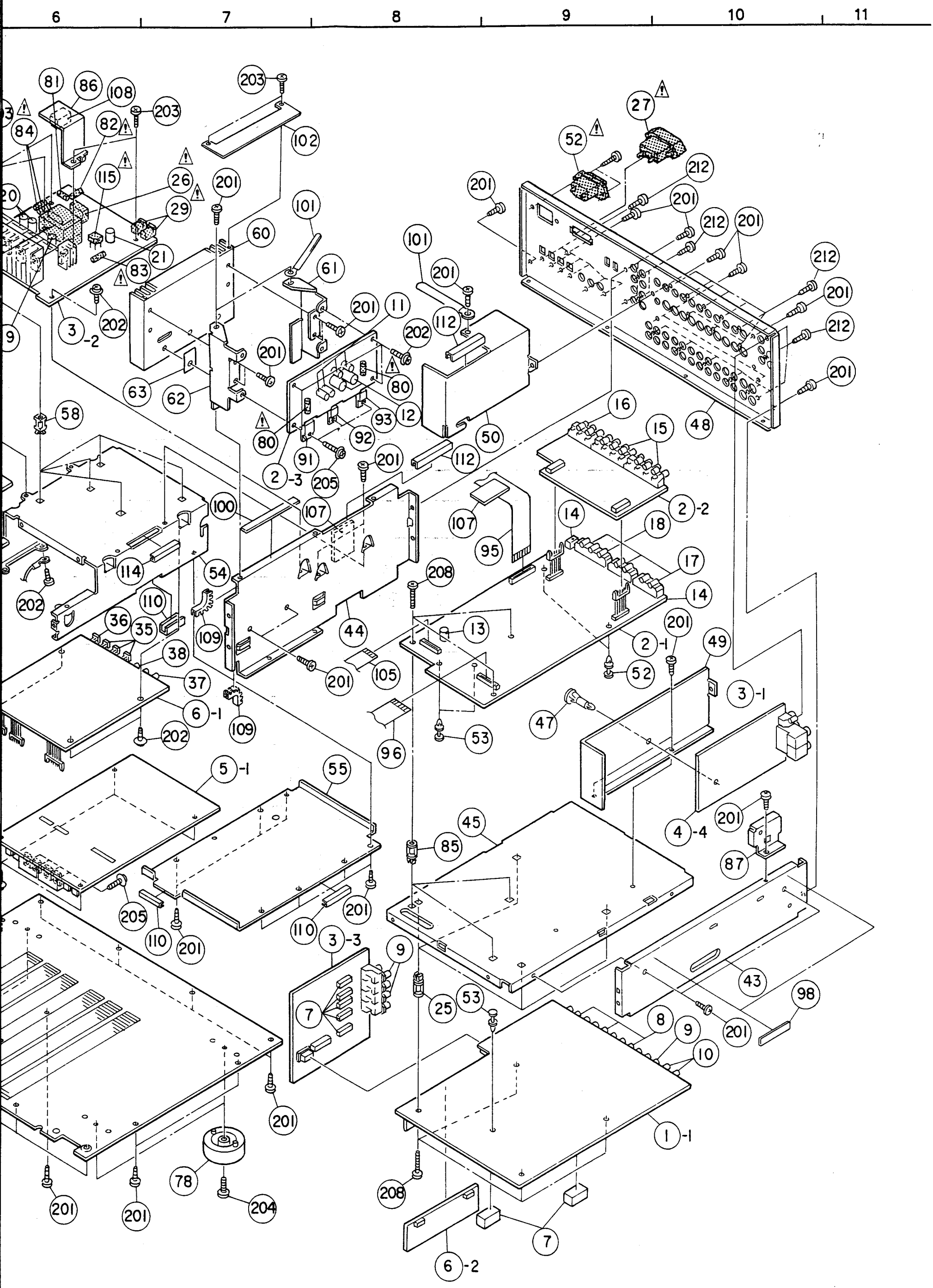

with this symbol ⚠ ▒▒▒ have critical characteristics.
acement parts recommended by the manufacturer.

PARTS LIST OF EXPLODED VIEW

Ref. No.	Part No.	Part Name	Remarke	Q'ty
◉ 1	1U- 2871 A	Audio P.W.B. unit Ass'y		1s
1-1	—	Audio unit		(1)
1-2	—	Function LED unit		(1)
◉ 2	1U- 2872 A	Video P.W.B. unit Ass'y		1s
2-1	—	S-video & micon unit		(1)
2-2	—	C-video unit		(1)
2-3	—	Power supply-2 unit		(1)
◉ 3	1U- 2873 A	Power supply P.W.B. unit Ass'y		1s
3-1	—	—		
3-2	—	Power supply-1 unit		(1)
3-3	—	Pre out unit		(1)
3-4	—	Tone unit		(1)
◉ 4	1U- 2874 A	Display P.W.B. unit Ass'y		1s
4-1	—	FLD unit		(1)
4-2	—	Master volume unit		(1)
4-3	—	Function sw unit		(1)
4-4	—	Hi-vision unit		(1)
4-5	—	Volume LED unit		(1)
4-6	—	Headphone unit		(1)
◉ 5	1U- 2875 A	Digital P.W.B. unit Ass'y		1s
5-1	—	AD/DA unit		(1)
◉ 6	1U- 2928 A	DSP P.W.B. unit Ass'y		1s
6-1	—	DSP unit		(1)
6-2	—	Shield unit		(1)
7	214 0127 003	Relay (RY-12W)	RL401~404,651~654	8
8	204 8513 007	6 P pin jack (S-GND)	JK402~404	3
9	204 8514 006	4 P pin jack (S-GND)	JK405,651,652	3
10	204 8518 002	2 P pin jack	JK406,407	2
11	254 4259 700	Chemicon 2200μF/35V	C939,941,951,952	4
12	254 4413 009	Chemicon 2200μF/35V(ARS)	C940,942	2
13	254 4250 783	Chemicon 3300μF/6.3V	C903	1
14	204 8260 004	Mini jack	JK805	1
15	204 8515 005	4 P pin jack (S-GND)	JK751,752	2
16	204 8516 004	3 P pin jack (S-GND)	JK753	1
17	204 8415 008	3 P S-terminal (AU)	JK801~803	3
18	205 0906 000	1 P S-terminal (AU,SW)	JK804	1
19	254 4256 790	Chemicon 2200μF/25V	C981	1
20	254 4257 702	Chemicon 3300μF/25V	C963,964	2
21	254 4416 705	Chemicon 10000μF/25V	C922	1
22	—	—		
⚠ 23	233 6074 009	Power transformer (mini)	PT961	1
24	211 0860 002	Variable resistor 30kohm	VR651	1
25	211 0860 015	Variable resistor 5kohm	VR652	1
⚠ 26	214 0188 000	Relay VS-12MBNR-SM2(TV-8)	RL961	1
⚠ 27	203 3942 007	AC outlet		1
28	—	—		
⚠ 29	204 8289 001	DC power jack	JK961,962	2
30	393 4156 001	FLD FIP16FM7R	FL101	1
31	499 0150 008	Remocon sensor SBX1510-52	IC103	1
32	204 8217 031	Head phone jack (BK(AU))	JK711	1
33	212 0373 000	Rotary encoder-EC16B	S120,121	2
34	393 9549 008	LED LB-303VA	LD124	1
35	269 0097 007	Optical input GP1F32R	IC005,010,011	3
36	269 0098 006	Optical output GP1F32T	IC012	1
37	204 8517 003	1 P pin jack (S-GND)	JK102,701	2
38	204 8357 027	2 P pin jack	JK101	1
◉ 39	411 1328 208	Front chassis		1

Ref. No.	Part No.	Part Name	Remarke	Q'ty
◉ 40	412 4045 002	Phone bracket		1
◉ 41	412 4046 001	Volume bracket		1
◉ 42	412 2814 002	Card spacer (L=8)		2
◉ 43	411 1330 209	Side chassis		2
◉ 44	411 1331 208	Center chassis		1
45	414 0755 208	Shield		1
◉ 46	411 1332 207	Trans chassis		1
◉ 47	412 2741 049	P.W.B. holder (H=12)		2
◉ 48	105 1177 224	Rear panel		1
49	414 0756 100	Shield-tuner		1
50	414 0757 109	Shield-pre		1
⚠ 51	—	—		
⚠ 52	203 3970 008	AC inlet		1
◉ 53	412 2814 057	Card spacer (L=12)		5
54	414 0758 205	Shield cover-1		1
55	414 0759 204	Shield cover-2		1
56	414 0762 107	Shield cover-3		1
57	342 0016 011	Ferrite clamp		2
◉ 58	415 9032 006	P.W.B. holder (T)		5
⚠ 59	233 6208 008	Power transformer		1
◉ 60	417 0523 206	Radiator		1
◉ 61	412 4047 000	Radiator bracket (R)		1
◉ 62	412 4053 007	Radiator bracket (L)		1
63	415 0234 007	Insulating sheet		1
◉ 64	144 2473 414	Front panel Ass'y		1
65	113 1654 120	Power button Ass'y		1
66	113 9249 139	Selector button		2
67	113 1464 006	Push button		2
68	435 0125 000	Latch (4T02)		1
69	421 9007 007	Mini damper		1
◉ 70	412 2741 036	P.W.B. holder (H=10)		1
71	144 2477 119	Trap door		1
72	401 0165 216	Hinge (L)		1
73	401 0166 312	Hinge (R)		1
74	112 0774 011	Knob Ass'y (M)		1
75	112 0773 119	Knob Ass'y (F)		1
76	112 0685 113	Knob (round)		2
◉ 77	105 1178 207	Bottom cover		1
78	104 9044 000	Foot Ass'y		4
◉ 79	102 0569 216	Top cover		1
⚠ 80	206 1015 061	Fuse 2.0 A	F014,015 (1U-2872)	2
⚠ 81	206 1015 016	Fuse 1.25 A	F001 (1U-2873)	1
⚠ 82	206 1015 029	Fuse 1 A (T)	F008 (1U-2873)	1
⚠ 83	206 1015 087	Fuse 4.0 A (T)	F011 (1U-2873)	1
⚠ 84	206 1015 058	Fuse 1.6 A	F012,013 (1U-2873)	2
◉ 85	412 2762 002	P.W.B. holder		7
86	411 1347 001	Trans cover		1
87	414 0769 003	Shield cover (T)		1
88	415 9016 006	P.W.B. holder		1
◉ 89	412 2814 015	Card spacer (L=14)		2
◉ 90	412 2814 028	Card spacer (L=10)		1
91	273 0387 004	Transistor 2SC3853(O/P/Y)(Z)	TR961	1
92	263 0561 001	IC NJM7915FA	IC966	1
93	263 0812 006	IC NJM7815FA(S)	IC965	1
94	204 9529 003	4 P pin jack (SW)	JK702	1
95	009 0142 017	37 P FF cable (Shield)	CN37A	1
96	009 0105 025	25 P FF cable	CN25A	1

Ref. No.	Part No.	Part Name	Remarke	Q'ty
97	461 0390 070	Rubber sheet 130x8xT3	put on T.cover	3
98	461 0551 055	Rubber sheet 65x8xT3	Side chassis	2
99	122 0183 036	Spacer 280x10xT0.5	Front panel upper	1
100	461 0551 042	Rubber sheet 115x8xT4	Center chassis	1
101	445 0048 003	Cord holder L=76		1
102	414 0796 009	Safety plate	Radiator	1
★ 103	445 8004 007	Wire clamper		6
104	122 0220 012	Blind sheet (VR)		2
105	009 0101 003	29 P FGFcable	CN29A	1
⚠ 106	342 0022 005	Line filter(SFC-8)		1
107	461 0551 039	Rubber sheet 40x50xT2	FF cable	2
108	461 9063 007	Rubber sheet 3x10xT3		1
109	449 0131 006	Flevible bush	L=33	2
110	449 0080 018	Edging	L=40	4
111	—	—		
112	499 0080 034	Edging	L=75	2
113	477 0231 024	Washer φ4 (S)	Trap door	2
114	499 0080 047	Edging	L=45	1
⚠ 115	276 0424 005	Diode 4D4B42 (LC1)	Bridge	1
116				
SCREWS				
201	473 8061 003	Screw 3x8 (B) CU		69
202	473 8007 025	Cup screw 3x8		13
203	473 7500 015	Screw 3x8 (P)		10
204	473 7007 000	Screw 4x8 (S) BK		8
205	473 8007 009	Cup screw 3x12		1
206	473 7505 007	Screw 2.6x8 (P)		17
207	471 7514 001	Special screw		1
208	473 7501 030	Screw 3x20 (P)		7
209	—	—		
210	473 7003 004	F.H. screw 3x8		5
211	473 7005 002	Screw 3x10 (S)		2
212	477 0064 107	Fixing screw		27
213	473 7002 021	Screw 3x8 (S) BK		2
214	473 7002 018	Screw 3x8 (S)		3
215	471 9043 008	Special screw		8
216				
LABEL & SHEETS				
121	—	—		
122	—	—		
123	—	—		
124	—	—		
125	513 2585 003	Fuse label	for F008	1
126	513 2585 016	Fuse label	for F001	1
127	513 2585 029	Fuse label	for F012,013	2
128	513 2585 058	Fuse label	for F011	1
129	513 2585 032	Fuse label	for F014,015	2
130				

Ref. No.	Part No.	Part Name	Remarke	Q'ty
PACKING & ACCESSORIES				
151	504 9102 029	Stylen paper	900x700	1
152	505 9102 019	Poly cover	900x450	1
◉ 153	503 1198 203	Cushion		2
◉ 154	501 1894 022	Carton case		1
155	—	—		
156	—	—		
157	GEN 3355 -2	Envelope Sub Ass'y		1s
157-1	505 8006 019	Envelope	255x380	(1)
157-2	511 2887 006	Inst. manual		(1)
157-3	399 0310 001	Remote controller	RC-809	(1)
157-4	—	Batteries	R6P/AA/SUM-3	(2)
⚠ 157-5	206 2147 006	AC cord with connector		(1)
158	502 0889 002	Pad	for Envelope	2
159	513 9111 001	Color label (Gold)		2
160				

REMOTE CONTROL UNIT (RC-809)

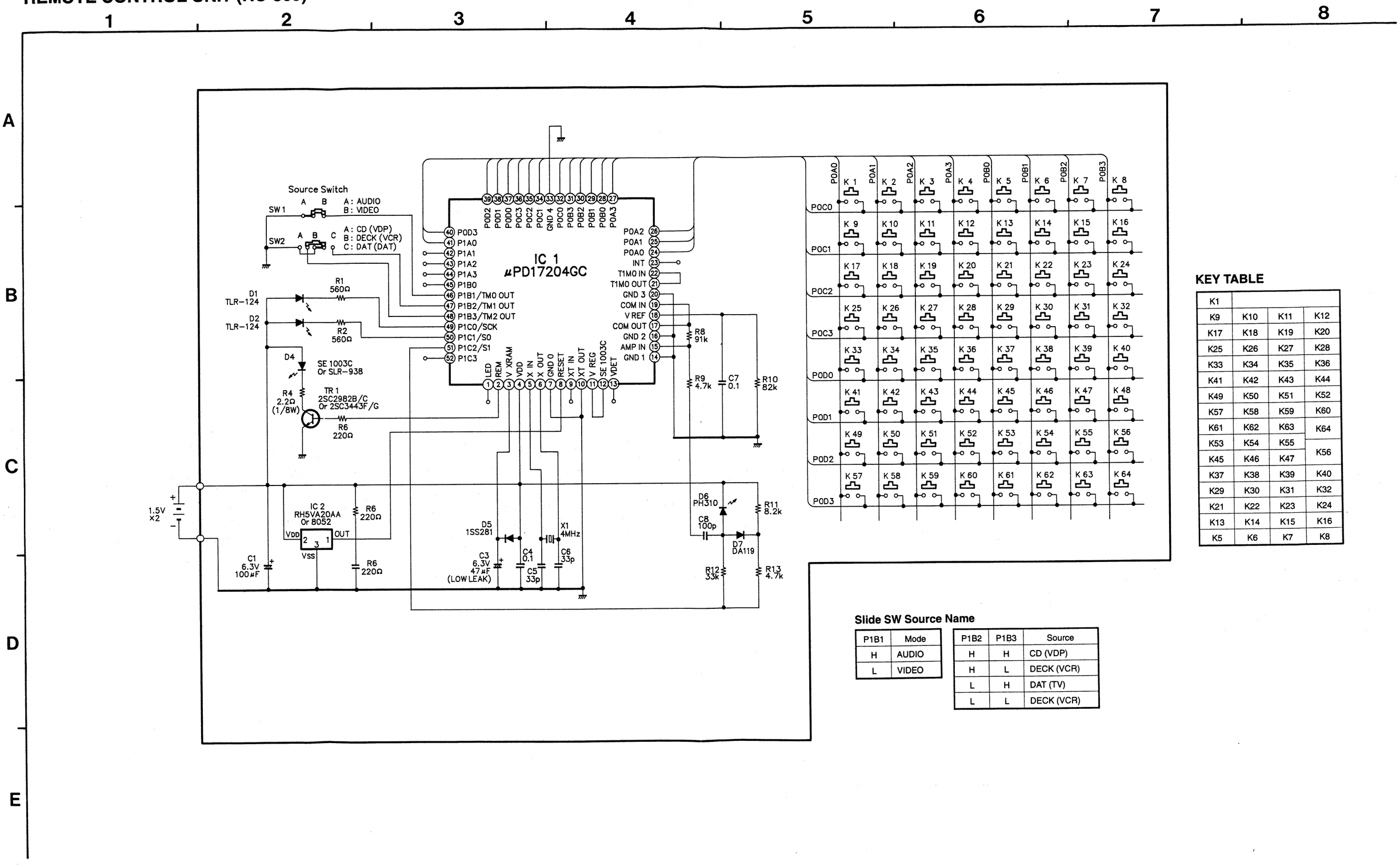

KEY TABLE

K1			
K9	K10	K11	K12
K17	K18	K19	K20
K25	K26	K27	K28
K33	K34	K35	K36
K41	K42	K43	K44
K49	K50	K51	K52
K57	K58	K59	K60
K61	K62	K63	K64
K53	K54	K55	K56
K45	K46	K47	
K37	K38	K39	K40
K29	K30	K31	K32
K21	K22	K23	K24
K13	K14	K15	K16
K5	K6	K7	K8

Slide SW Source Name

P1B1	Mode
H	AUDIO
L	VIDEO

P1B2	P1B3	Source
H	H	CD (VDP)
H	L	DECK (VCR)
L	H	DAT (TV)
L	L	DECK (VCR)

REMOTE CONTROL UNIT(RC-809)

REMOTE CONTROL P.W.B.UNIT ASS'Y

Ref. No.	Part No.	Part Name	Remarke	
SEMICONDUCTORS GROUP				
IC001	9H3 1000 169	IC µPD17204GC-538		
IC002	9H3 1000 158	IC RH5V20AA	Volume detector	
TR001	9H3 1000 070	Transistor 2SC3443BF/BG		
or		Transistor 2SC2982B/C		
D001,002	9H3 1000 028	LED TLR124		
D004	9H3 1000 131	LED SE1003-C	infrared LED	
D005	9H3 1000 087	Diode 1SS281(1)		
D006	9H3 1000 029	Diode PH310	photo-pin	
D007	9H3 1000 071	Diode DA119/DA118		
or	276 0574 900	Diode 1SS196		
RESISTORS GROUP (Not included carbon film ±5% 1/4W)				
R001,002	247 0006 988	Carbon chip 560ohm 1/10W	RM73B--561J	
R004	247 0001 909	Carbon chip 2.2ohm 1/10W	RM73B--2R2J	
R006	247 0005 989	Carbon chip 220ohm 1/10W	RM73B--221J	
R007	247 0012 927	Carbon chip 100kohm 1/10W	RM73B--104J	
R008	247 0012 914	Carbon chip 91kohm 1/10W	RM73B--913J	
R009	247 0009 901	Carbon chip 4.7kohm 1/10W	RM73B--472J	
R010	247 0012 901	Carbon chip 82kohm 1/10W	RM73B--823J	
R011	247 0009 969	Carbon chip 8.2kohm 1/10W	RM73B--822J	
R012	247 0011 902	Carbon chip 33kohm 1/10W	RM73B--333J	
R013	247 0009 901	Carbon chip 4.7kohm 1/10W	RM73B--472J	
J007,008	247 0018 905	Carbon chip 0ohm 1/10W	RM73B--0R0K	
CAPACITORS GROUP				
C001	254 4213 034	Electrolytic 100µF/6.3V	CE04W0J101M	
C002	—	Ceramic chip 0.33µF/25V	CK73F1E334Z	
C003	254 4213 021	Electrolytic 47µF/6.3V	CE04W0J470M	
C004	257 0014 935	Ceramic chip 0.1µF/25V	CK73F1E104Z	
C005,006	257 0003 946	Ceramic chip 33pF/50V	CK73SL1H330J	
C007	257 0014 935	Ceramic chip 0.1µF/25V	CK73F1E104Z	
C008	257 0004 961	Ceramic chip 100pF/50V	CC73SL1H101J	
OTHERS PARTS GROUP				**Q'ty**
	—	(P.W.board)		(1)
X001	9H3 1000 088	Ceramic resonator	KBR4.0M503	1
SW001	9H3 1000 089	Slide switch 1-2		1
SW002	9H3 1000 0	Slide switch 1-3		1
	—	Wrapping terminal		2

PARTS LIST OF EXPLODED VIEW

Ref. No.	Part No.	Part Name	Remarke	Q'ty
1	9H3 1000 145	Case top Ass'y		1
2	—			
3	9H3 1000 149	Switch rubber		1
4	9H3 1000 146	Case bottom Ass'y		1
5	9H3 1000 147	Battery cover		1
6	9H3 1000 148	IR filter		1
7	9H3 1000 150	Button switch		2
8	—			
9	9H3 1000 153	Coil spring		1
10	9H3 1000 151	Coil spring		1
11	9H3 1000 152	Coil spring		1
12	9H3 1000 154	Screw 2x6		1
13	9H3 1000 107	Screw 2x5		1
14	9H3 1000 156	P.W.B. unit Ass'y		1s
15	9H3 1000 155	Label		1
16	—	Sheet		1
17				

DENON

Hi-Fi Digital AV Pre-Amplifier

For Europe model

SERVICE MANUAL

MODEL AVP-A1

DIGITAL AV PRE-AMPLIFIER

This service manual is mentioned by difference only from already issued service manual model AVP-A1 (No. 0522). When servicing AVP-A1, please refer to both.

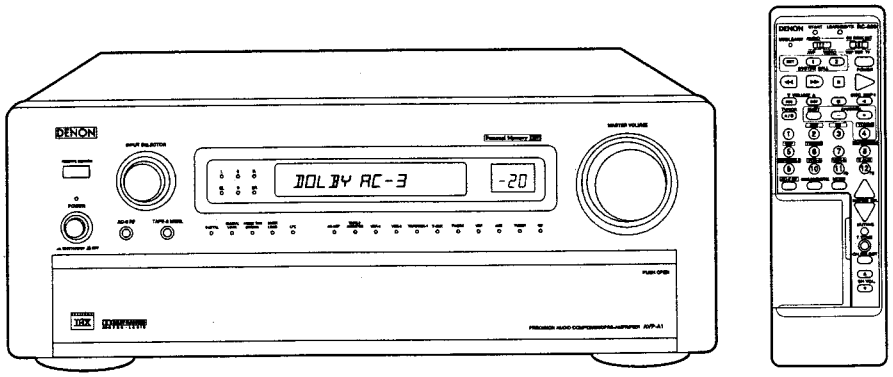

CONTENTS

NIPPON COLUMBIA CO., LTD.

BLOCK DIAGRAM

- SUB WOOFER input circuit is added to AVP-A1 Europe model as compared with AVP-A1 Asia model.

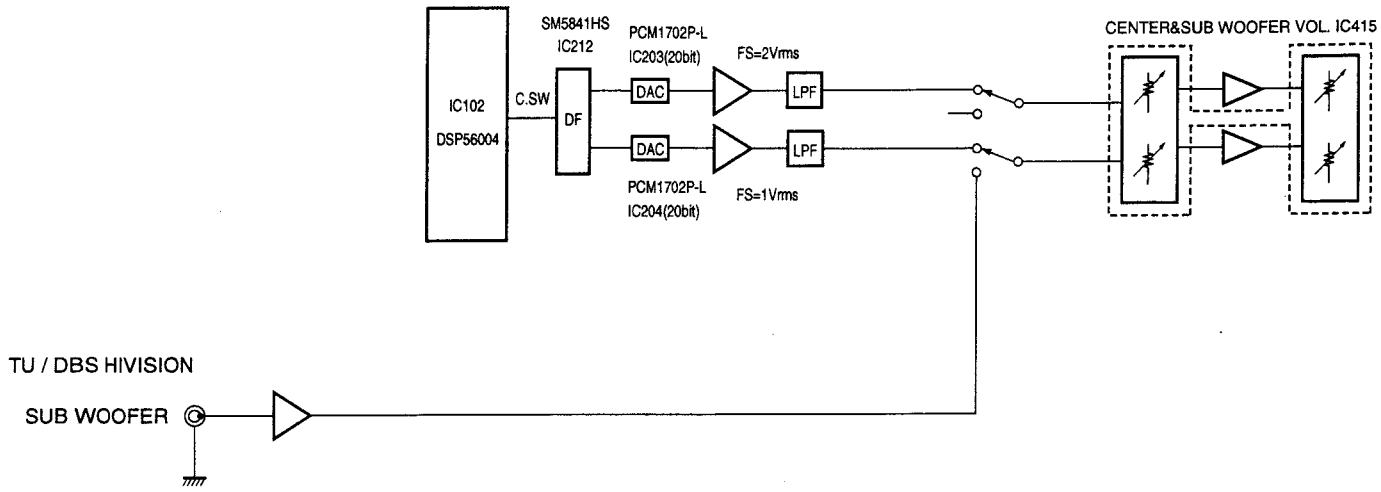

WIRING DIAGRAM

AUDIO SECTION

- The power switch is changed to mechanical type switch and the connector (CN3E) of HI-VISION UNIT is added to AVP-A1 Europe model as compared with AVP-A1 Asia model.

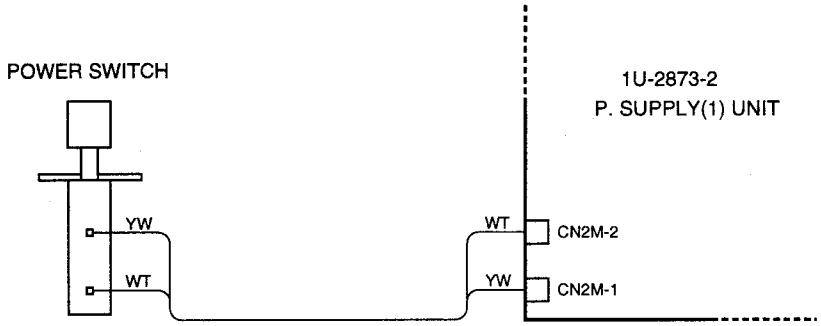

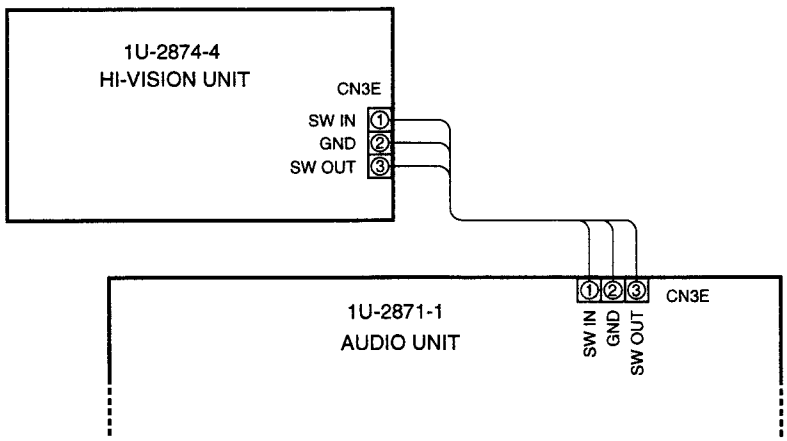

SCHEMATIC DIAGRAM / P.W.Board

● The power switch is changed to mechanical type switch and the connector (CN3E) of HI-VISION UNIT is added to AVP-A1 Europe model as compared with AVP-A1 Asia model.

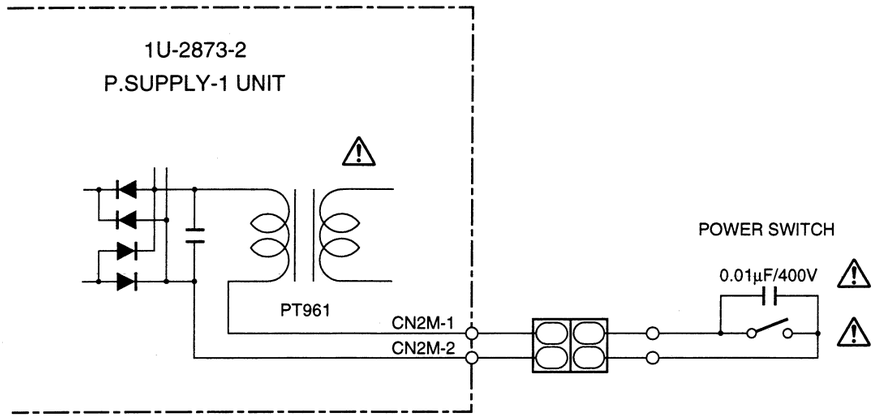

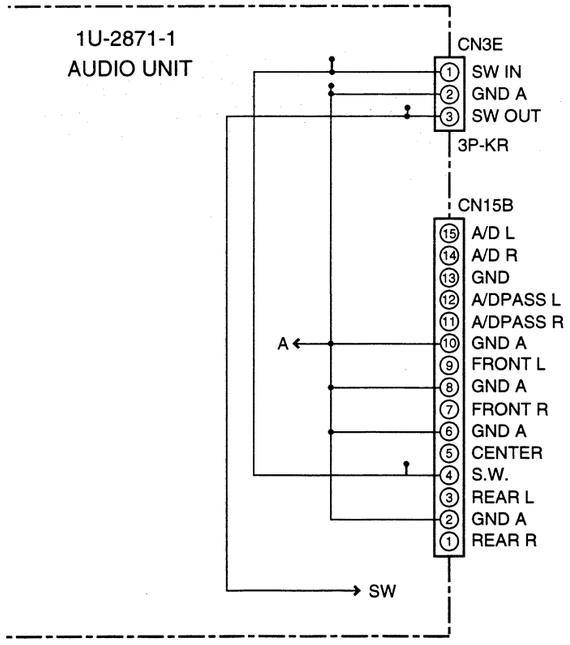

● **1U-2962-1 FUNCTION SW UNIT**

S101 is omitted from 1U-2874-3 schematic diagram.

○ Dimensions of newly added P.W.B.

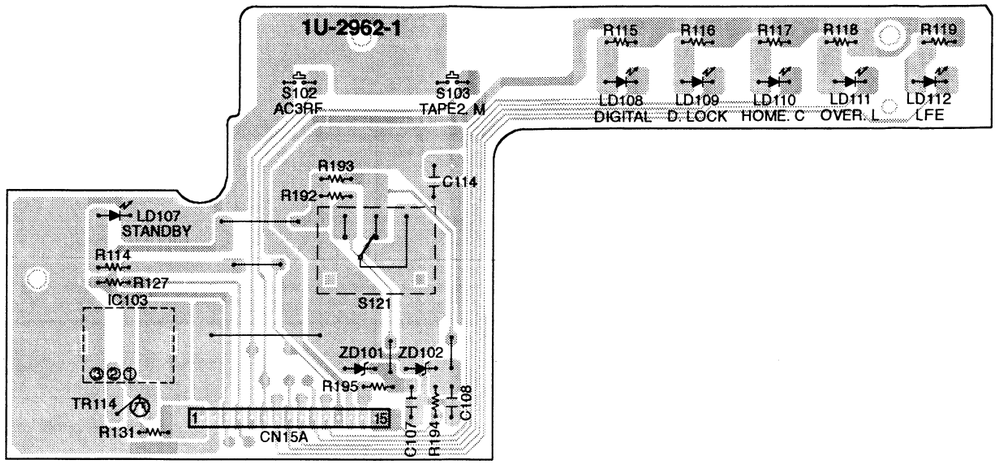

● **1U-2962-1 FUNCTION P.W.Board.**

Parts change is deletion of S101 tact switch (each 1) as compared with AVP-A1 Asia model.

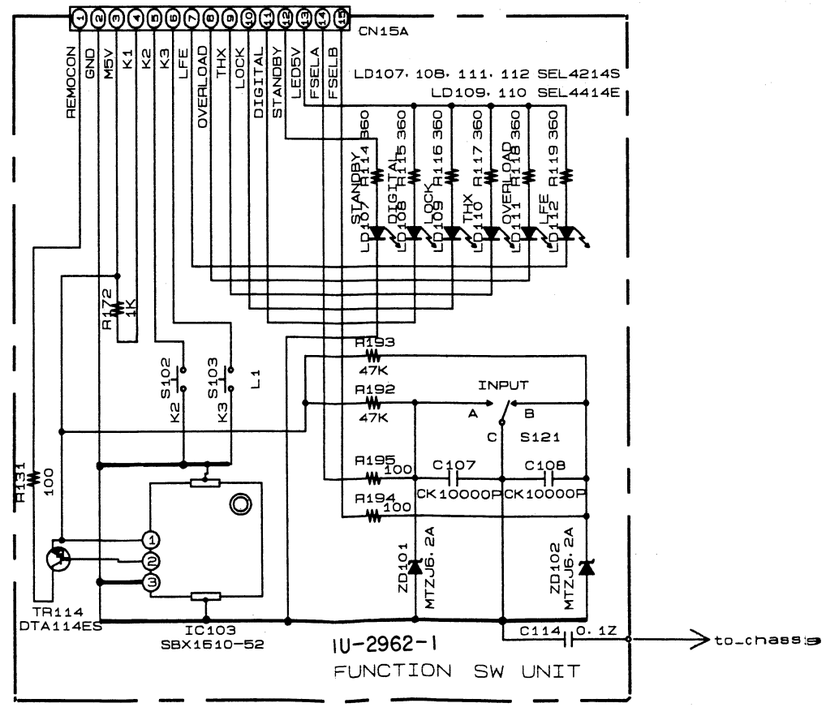

● **1U-2874-4 HI-VISION UNIT**

SUB WOOFER input terminal and peripheral circuit are added.

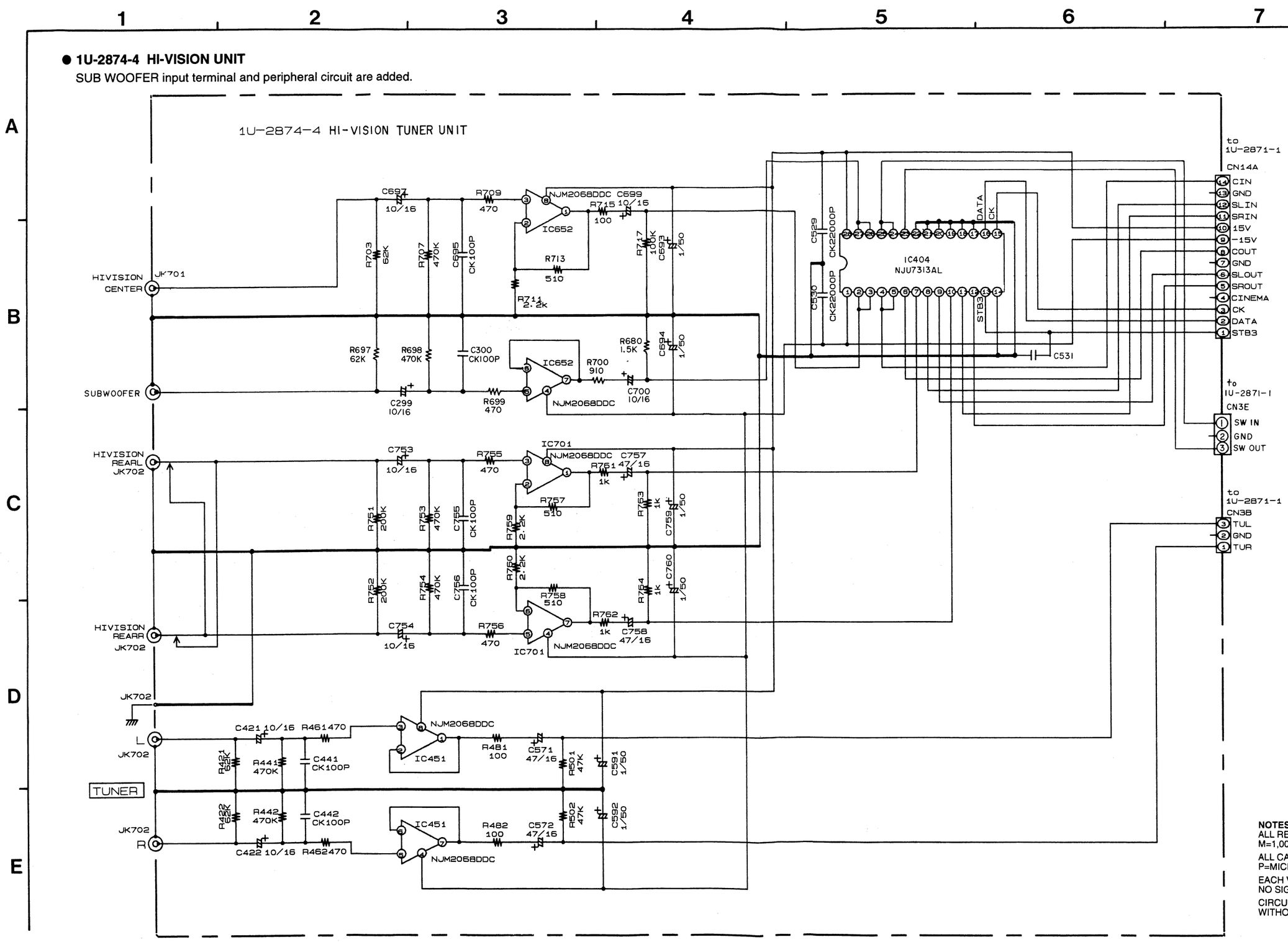

NOTES

ALL RESISTANCE VALUES IN OHM. k=1,000 OHM, M=1,000,000 OHM

ALL CAPACITANCE VALUES IN MICRO FARAD. P=MICRO-MICRO FARAD

EACH VOLTAGE AND CURRENT ARE MEASURED AT NO SIGNAL INPUT CONDITION.

CIRCUIT AND PARTS ARE SUBJECT TO CHANGE WITHOUT PRIOR NOTICE.

1U-2871B AUDIO UNIT Ass'y

* Except the following part, all others are the same as 1U-2871A.

Ref. No.	Part No.	Part Name	Remarks
OTHER PARTS GROUP			
CN3E	205 0343 032	3P connector base (KR-PH)	

1U-2872D VIDEO UNIT Ass'y

* Except the following part, all others are the same as 1U-2872A.

Ref. No.	Part No.	Part Name	Remarks
CAPACITORS GROUP			
C903	259 0007 702	Electrolytic 8200 µF/5.5V	SB CAP==822=C
C906	254 4254 909	Electrolytic 10 µF/16V	CE04W1C100M

1U-2873C POWER SUPPLY UNIT Ass'y

* Except the following part, all others are the same as 1U-2873A.

Ref. No.	Part No.	Part Name	Remarks
OTHER PARTS GROUP			
CN2M	203 2388 002	2P CAP connector Ass'y	
⚠ F008	206 1015 032	Fuse 2.5A	
	513 2585 074	Fuse label	for F008

1U-2874B DISPLAY UNIT Ass'y

* Except the following part, all others are the same as 1U-2874A.

Ref. No.	Part No.	Part Name	Remarks
CAPACITORS GROUP			
C299	254 4254 909	Electrolytic 10 µF/16V	CE04W1C100M
C300	253 1179 903	Ceramic 100pF/50V	CK45B1H101K
C700	254 4254 909	Electrolytic 10 µF/16V	CE04W1C100M
OTHER PARTS GROUP			
JK701	204 8531 005	2P pin jack (C-GND)	
CN3E	205 0343 032	3P connector base (KR-PH)	

1U-2928B DSP UNIT Ass'y

* Except the following part, all others are the same as 1U-2928A.

Ref. No.	Part No.	Part Name	Remarks
RESISTORS GROUP			
R049,050	247 0018 905	Carbon chip 0 ohm 1/10W	RM73B--0R0K

1U-2962 FUNCTION SW UNIT Ass'y

Ref. No.	Part No.	Part Name	Remarks
SEMICONDUCTORS GROUP			
IC103	499 0150 008	Remocon sensor SBX1610-52	
TR114	269 0046 003	Transistor DTA114ES	Built in resistor
ZD101,102	276 0637 902	Zener diode MTZJ6.2A	6.2V
LD107,108	393 9408 903	LED SEL4214S	Red
LD109,110	393 9408 916	LED SEL4414E	Green
LD111,112	393 9408 903	LED SEL4214S	Red
CAPACITORS GROUP			
C107,108	253 1181 904	Ceramic 0.01 µF/50V	CK45F1H103Z
C114	253 9036 006	BC Ceramic 0.1 µF/25V	CK45=1E104Z
OTHER PARTS GROUP			
S102,103	212 5604 910	Tact switch	
S121	212 0373 000	Rotaly encoder EC16B	
CN15A	204 6335 025	15P KR-DA connector cord	

PARTS LIST OF EXPLODED VIEW

Ref. No.	Part No.	Part Name	Remarke	Q'ty
◉ 1	1U- 2871 B	Audio P.W.B. unit Ass'y		1s
1-1	—	Audio unit		(1)
1-2	—	Function LED unit		(1)
◉ 2	1U- 2872 D	Video P.W.B. unit Ass'y		1s
2-1	—	S-video & micon unit		(1)
2-2	—	C-video unit		(1)
2-3	—	Power supply-2 unit		(1)
◉ 3	1U- 2873 C	Power supply P.W.B. unit Ass'y		1s
3-1	—	—		
3-2	—	Power supply-1 unit		(1)
3-3	—	Pre out unit		(1)
3-4	—	Tone unit		(1)
◉ 4	1U- 2874 B	Display P.W.B. unit Ass'y		1s
4-1	—	FLD unit		(1)
4-2	—	Master volume unit		(1)
4-3	—	—		
4-4	—	Hi-vision unit		(1)
4-5	—	Volume LED unit		(1)
4-6	—	Headphone unit		(1)
◉ 5	1U- 2875 A	Digital P.W.B. unit Ass'y		1s
5-1	—	AD/DA unit		(1)
◉ 6	1U- 2928 B	DSP P.W.B. unit Ass'y		1s
6-1	—	DSP unit		(1)
6-2	—	Shield unit		(1)
7	214 0127 003	Relay (RY-12W)	RL401~404,651~654	8
8	204 8513 007	6 P pin jack (S-GND)	JK402~404	3
9	204 8514 006	4 P pin jack (S-GND)	JK405,651,652	3
10	204 8518 002	2 P pin jack	JK406,407	2
11	254 4259 700	Chemicon 2200μF/35V	C939,941,951,952	4
12	254 4413 009	Chemicon 2200μF/35V(ARS)	C940,942	2
13	254 4250 783	Chemicon 3300μF/6.3V	C903	1
14	204 8260 004	Mini jack	JK805	1
15	204 8515 005	4 P pin jack (S-GND)	JK751,752	2
16	204 8516 004	3 P pin jack (S-GND)	JK753	1
17	204 8415 008	3 P S-terminal (AU)	JK801~803	3
18	205 0906 000	1 P S-terminal (AU,SW)	JK804	1
19	254 4256 790	Chemicon 2200μF/25V	C981	1
20	254 4257 702	Chemicon 3300μF/25V	C963,964	2
21	254 4416 705	Chemicon 10000μF/25V	C922	1
22	—	—		
⚠ 23	233 6074 009	Power transformer (mini)	PT961	1
24	211 0860 002	Variable resistor 30kohm	VR651	1
25	211 0860 015	Variable resistor 5kohm	VR652	1
⚠ 26	214 0188 000	Relay VS-12MBNR-SM2(TV-8)	RL961	1
⚠ 27	203 3942 007	AC outlet		1
28	—	—		
⚠ 29	204 8289 001	DC power jack	JK961,962	2
30	393 4156 001	FLD FIP16FM7R	FL101	1
31	499 0150 008	Remocon sensor SBX1510-52	IC103	1
32	204 8217 031	Head phone jack (BK(AU))	JK711	1
33	212 0373 000	Rotary encoder-EC16B	S120,121	2
34	393 9549 008	LED LB-303VA	LD124	1
35	269 0097 007	Optical input GP1F32R	IC005,010,011	3
36	269 0098 006	Optical output GP1F32T	IC012	1
37	204 8517 003	1 P pin jack (S-GND)	JK102	1
38	204 8357 027	2 P pin jack	JK101	1
◉ 39	411 1328 305	Front chassis		1

Ref. No.	Part No.	Part Name	Remarke	Q'ty
◉ 40	412 4045 002	Phone bracket		1
◉ 41	412 4046 001	Volume bracket		1
◉ 42	412 2814 002	Card spacer (L=8)		2
◉ 43	411 1330 209	Side chassis		2
◉ 44	411 1331 208	Center chassis		1
45	414 0755 208	Shield		1
◉ 46	411 1332 207	Trans chassis		1
◉ 47	412 2741 049	P.W.B. holder (H=12)		2
◉ 48	105 1177 237	Rear panel		1
49	414 0756 100	Shield-tuner		1
50	414 0757 109	Shield-pre		1
⚠ 51	—	—		
⚠ 52	203 3970 008	AC inlet		1
◉ 53	412 2814 057	Card spacer (L=12)		5
54	414 0758 205	Shield cover-1		1
55	414 0759 204	Shield cover-2		1
56	414 0762 107	Shield cover-3		1
57	342 0016 011	Ferrite clamp		2
◉ 58	415 9032 006	P.W.B. holder (T)		5
⚠ 59	233 6208 008	Power transformer		1
◉ 60	417 0523 206	Radiator		1
◉ 61	412 4047 000	Radiator bracket (R)		1
◉ 62	412 4053 007	Radiator bracket (L)		1
63	415 0234 007	Insulating sheet		1
◉ 64	144 2473 621	Front panel Ass'y		1
65	113 1792 011	Power button Ass'y		1
66	113 9249 139	Selector button		2
67	113 1464 006	Push button		2
68	435 0125 000	Latch (4T02)		1
69	421 9007 007	Mini damper		1
◉ 70	412 2741 036	P.W.B. holder (H=10)		1
71	144 2477 119	Trap door		1
72	401 0165 216	Hinge (L)		1
73	401 0166 312	Hinge (R)		1
74	112 0774 011	Knob Ass'y (M)		1
75	112 0773 119	Knob Ass'y (F)		1
76	112 0685 113	Knob (round)		2
◉ 77	105 1178 207	Bottom cover		1
78	104 9044 000	Foot Ass'y		4
◉ 79	102 0569 216	Top cover		1
⚠ 80	206 1015 061	Fuse 2.0 A	F014,015 (1U-2872)	2
⚠ 81	206 1015 016	Fuse 1.25 A	F001 (1U-2873)	1
⚠ 82	206 1015 032	Fuse 2.5 A	F008 (1U-2873)	1
⚠ 83	206 1015 087	Fuse 4.0 A (T)	F011 (1U-2873)	1
⚠ 84	206 1015 058	Fuse 1.6 A	F012,013 (1U-2873)	2
◉ 85	412 2762 002	P.W.B. holder		7
86	411 1347 001	Trans cover		1
87	414 0769 003	Shield cover (T)		1
88	415 9016 006	P.W.B. holder		1
◉ 89	412 2814 015	Card spacer (L=14)		2
◉ 90	412 2814 028	Card spacer (L=10)		1
91	273 0387 004	Transistor 2SC3853(O/P/Y)(Z)	TR961	1
92	263 0561 001	IC NJM7915FA	IC966	1
93	263 0812 006	IC NJM7815FA(S)	IC965	1
94	204 8529 004	4 P pin jack (SW)	JK702	1
95	009 0142 017	37 P FF cable (Shield)	CN37A	1
96	009 0105 025	25 P FF cable	CN25A	1

Ref. No.	Part No.	Part Name	Remarke	Q'ty
97	461 0390 070	Rubber sheet 130x8xT3	put on T.cover	3
98	461 0551 055	Rubber sheet 65x8xT3	Side chassis	2
99	122 0183 036	Spacer 280x10xT0.5	Front panel upper	1
100	461 0551 042	Rubber sheet 115x8xT4	Center chassis	1
101	445 0048 003	Cord holder L=76		1
102	414 0796 009	Safety plate	Radiator	1
★ 103	445 8004 007	Wire clamper		6
104	122 0220 012	Blind sheet (VR)		2
105	009 0101 003	29 P FGFcable	CN29A	1
⚠ 106	342 0022 005	Line filter(SFC-8)		1
107	461 0551 039	Rubber sheet 40x50xT2	FF cable	3
108	461 0551 068	Rubber sheet 25x20xT2		1
109	449 0131 006	Flevible bush	L=33	2
110	449 0080 018	Edging	L=40	4
111	—	—		
112	499 0080 034	Edging	L=75	2
113	477 0231 024	Washer φ4 (S)	Trap door	2
114	499 0080 047	Edging	L=45	1
⚠ 115	276 0424 005	Diode 4D4B42 (LC1)	Bridge	1
116	1U-2962	Function SW unit Ass'y		1s
116-1	—	Function SW unit		(1)
117	412 4163 007	Switch bracket		1
118	146 1656 005	LED holder		1
⚠ 119	212 1031 008	Power SW (TV-5)		1
⚠ 120	253 8014 003	CK45F2GAC103M		1
121	204 8531 005	2P pin jack (C-GND)	JK701	1
★ 122	203 2387 003	2P plug connector Ass'y	for Power switch	1
★ 123	203 4872 040	3P KR-KR ribbon cable (375)	for CN3E	1
★ 124	342 0016 011	Ferrite clamp		1
SCREWS				
201	473 8061 003	Screw 3x8 (B) CU		69
202	473 8007 025	Cup screw 3x8		13
203	473 7500 015	Screw 3x8 (P)		10
204	473 7007 000	Screw 4x8 (S) BK		8
205	473 8007 009	Cup screw 3x12		1
206	473 7505 007	Screw 2.6x8 (P)		18
207	471 7514 001	Special screw		1
208	473 7501 030	Screw 3x20 (P)		7
209	471 3303 016	Screw 3x6 (CBS-Z)		2
210	473 7003 004	F.H. screw 3x8		5
211	473 7005 002	Screw 3x10 (S)		2
212	477 0064 107	Fixing screw		27
213	473 7002 021	Screw 3x8 (S) BK		2
214	473 7002 018	Screw 3x8 (S)		3
215	471 9043 008	Special screw		8
216				
LABEL & OTHERS				
130	513 2585 074	Fuse label	for F008	1
131	513 2585 016	Fuse label	for F001	1
132	513 2585 029	Fuse label	for F012,013	2
133	513 2585 058	Fuse label	for F011	1
134	513 2585 032	Fuse label	for F014,015	2

Ref. No.	Part No.	Part Name	Remarke	Q'ty
PACKING & ACCESSORIES				
151	504 9102 029	Stylen paper	900x700	1
152	505 9102 019	Poly cover	900x450	1
◉ 153	503 1198 203	Cushion		2
◉ 154	501 1894 035	Carton case		1
155	—	—		
156	—	—		
157	GEN 3355 -2	Envelope Sub Ass'y		1s
157-1	505 8006 019	Envelope	255x380	(1)
157-2	511 2955 006	Inst. manual		(1)
157-3	399 0310 001	Remote controller	RC-809	(1)
157-4	—	Batteries	R6P/AA/SUM-3	(2)
⚠ 157-5	206 2147 006	AC cord with connector		(1)
158	502 0889 002	Pad	for Envelope	2
159	513 9111 001	Color label (Gold)		2
160				

EXPLODED VIEW