PIONEER®
The Art of Entertainment

Service Manual

ORDER NO.
RRZ1153

The chapter 1 of this Service Manual will not be reprinted. On your additional orders, we may supply only the chapter 2. For the chapter 1, please make copies and attach to the chapter 2 at your side if necessary.

CD CDV LD PLAYER

CLD-2950

CHAPTER 2

CONTENTS

CHAPTER 2

2.1 PACKING AND EXPLODED VIEWS ··· 2-3
2.2 SCHEMATIC AND PCB CONNECTION DIAGRAMS ····· 2-13
2.3 BLOCK DIAGRAMS ····· 2-53

PIONEER ELECTRONIC CORPORATION 4-1, Meguro 1-Chome, Meguro-ku, Tokyo 153, Japan
PIONEER ELECTRONICS SERVICE INC. P.O. Box 1760, Long Beach, California 90801 U.S.A.
PIONEER ELECTRONICS OF CANADA, INC. 300 Allstate Parkway Markham, Ontario L3R 0P2 Canada
PIONEER ELECTRONIC [EUROPE] N.V. Haven 1087 Keetberglaan 1, 9120 Melsele, Belgium
PIONEER ELECTRONICS AUSTRALIA PTY. LTD. 178-184 Boundary Road, Braeside, Victoria 3195, Australia TEL: [03] 580-9911

© PIONEER ELECTRONIC CORPORATION 1994

T-FFM JUNE 1994 Printed in Japan

2.1 PACKING AND EXPLODED VIEWS

2.1.1 PACKING

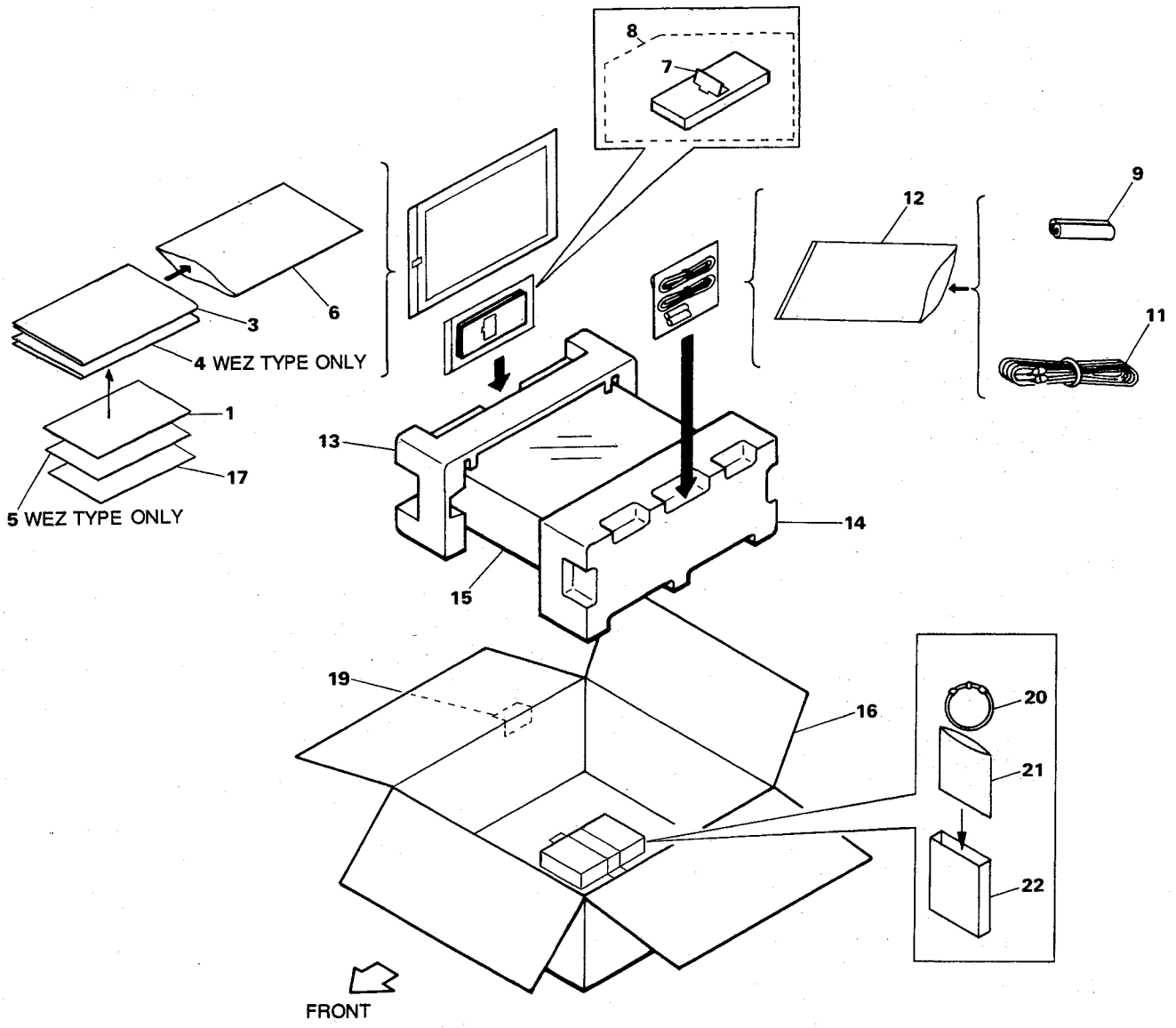

2.1.2 EXTERIOR AND DISC TRAY

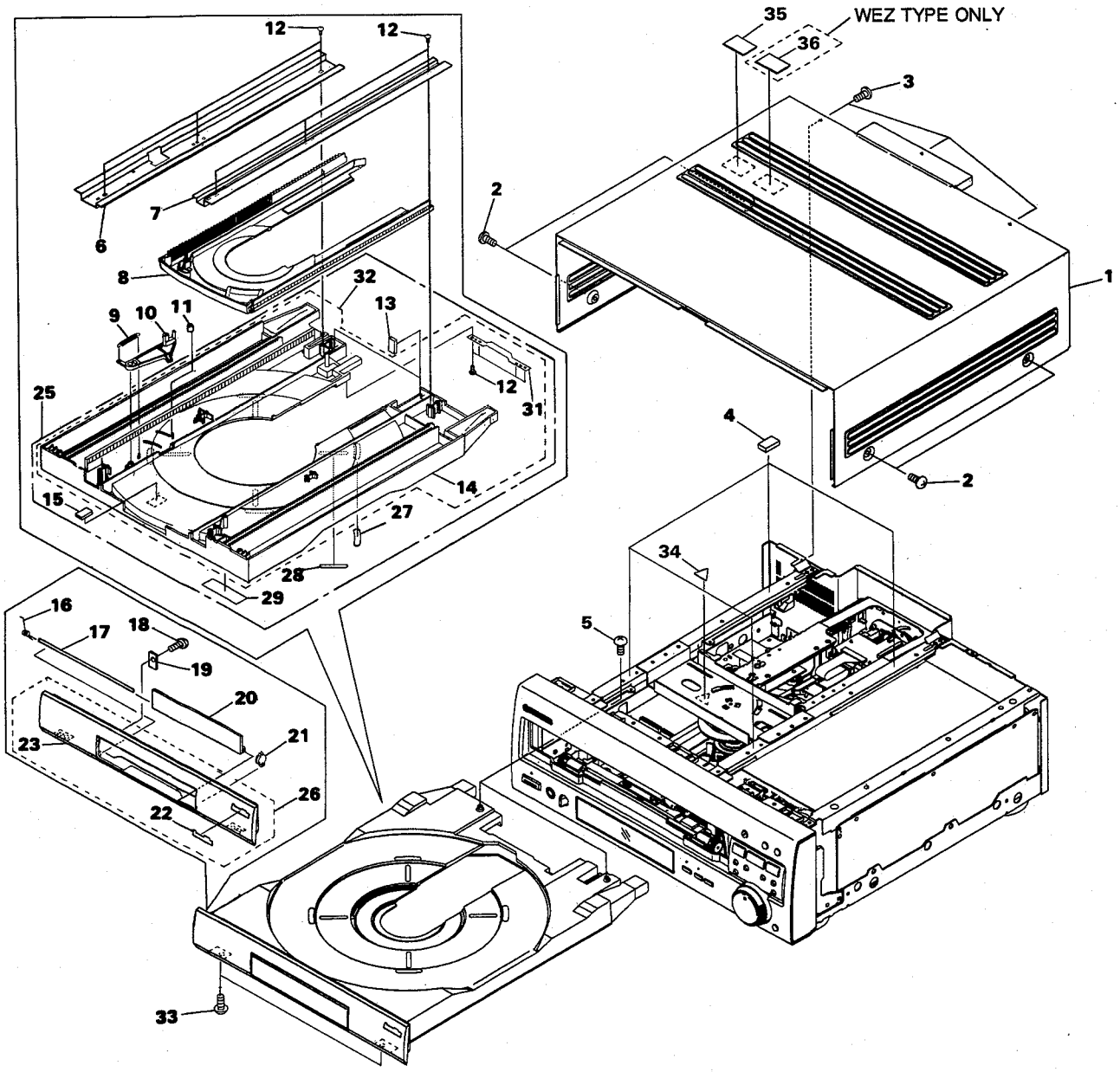

NOTE : Screws adjacent to ▼ mark on product are used for disassembly.

2.1.3 UPPER SECTION

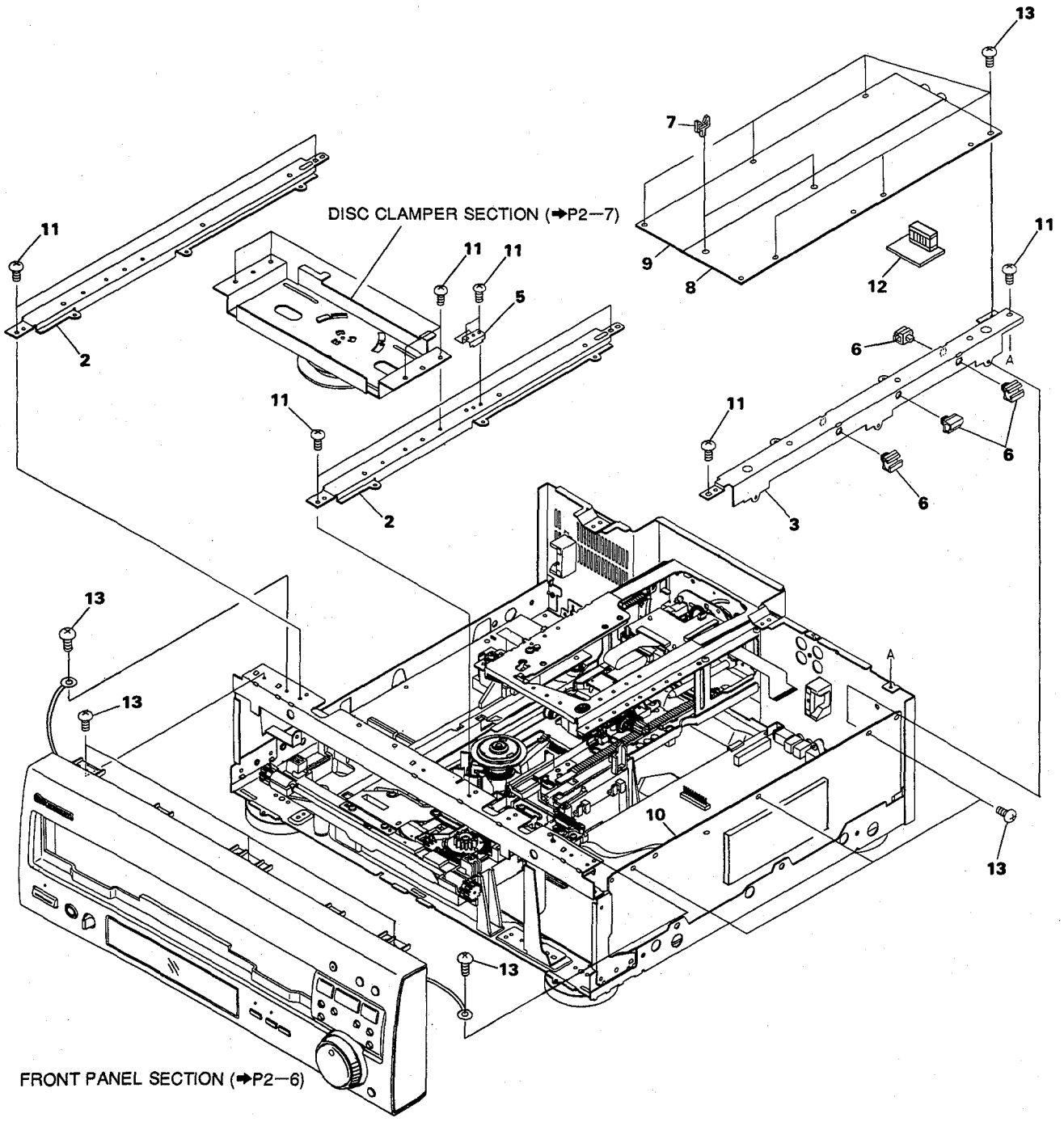

2.1.4 FRONT PANEL SECTION

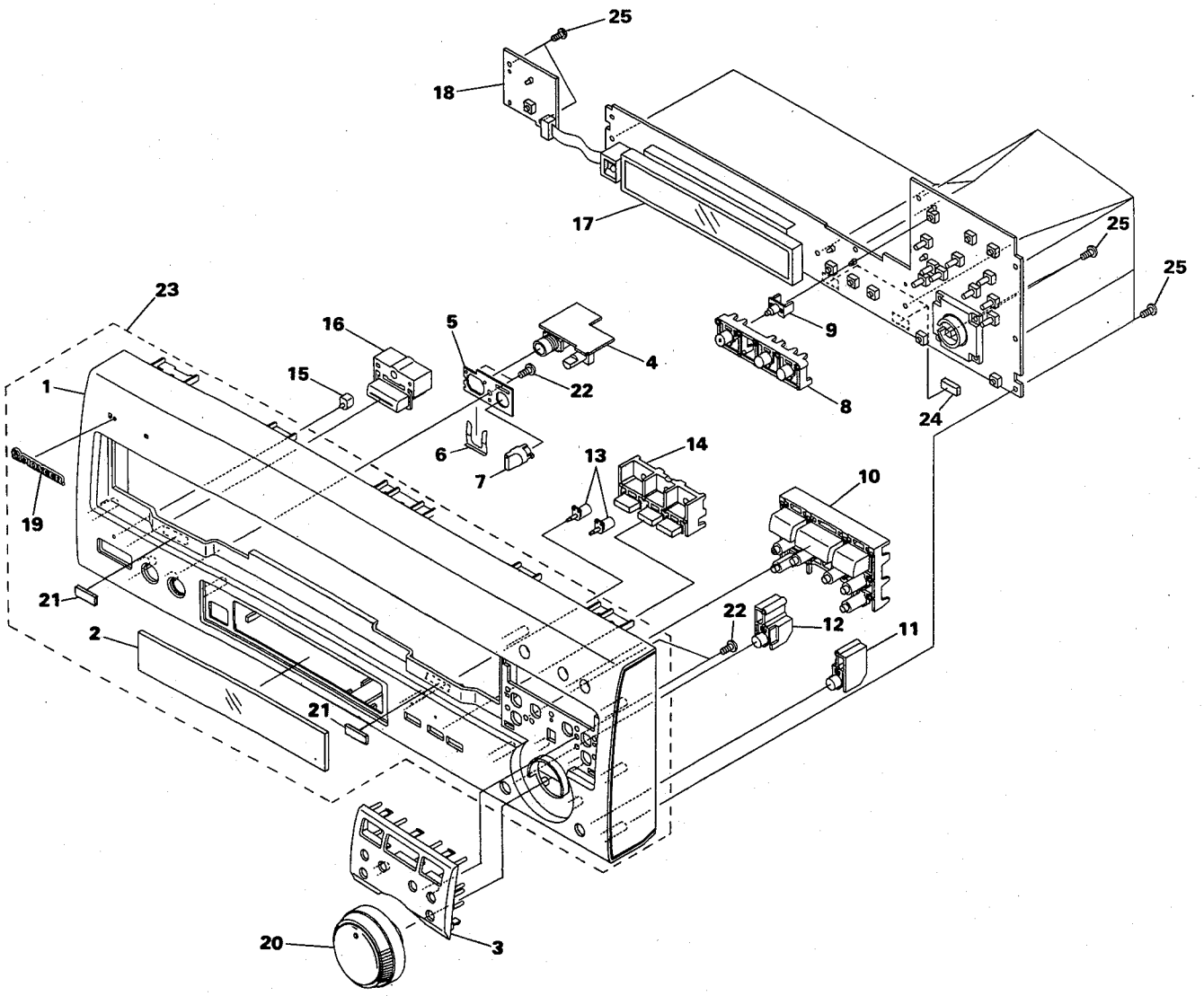

2.1.5 DISC CLAMPER SECTION

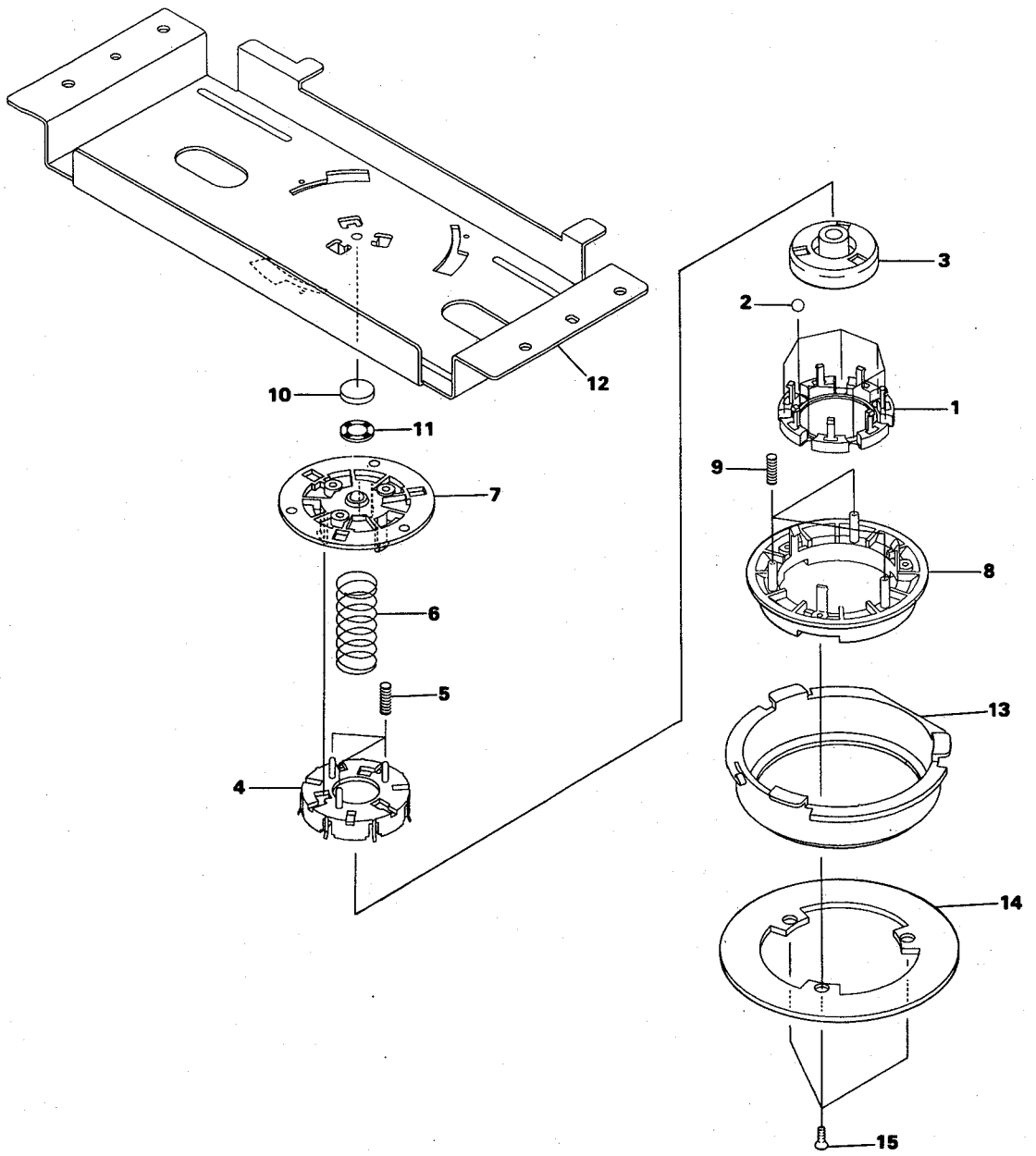

2.1.6 BOTTOM SECTION

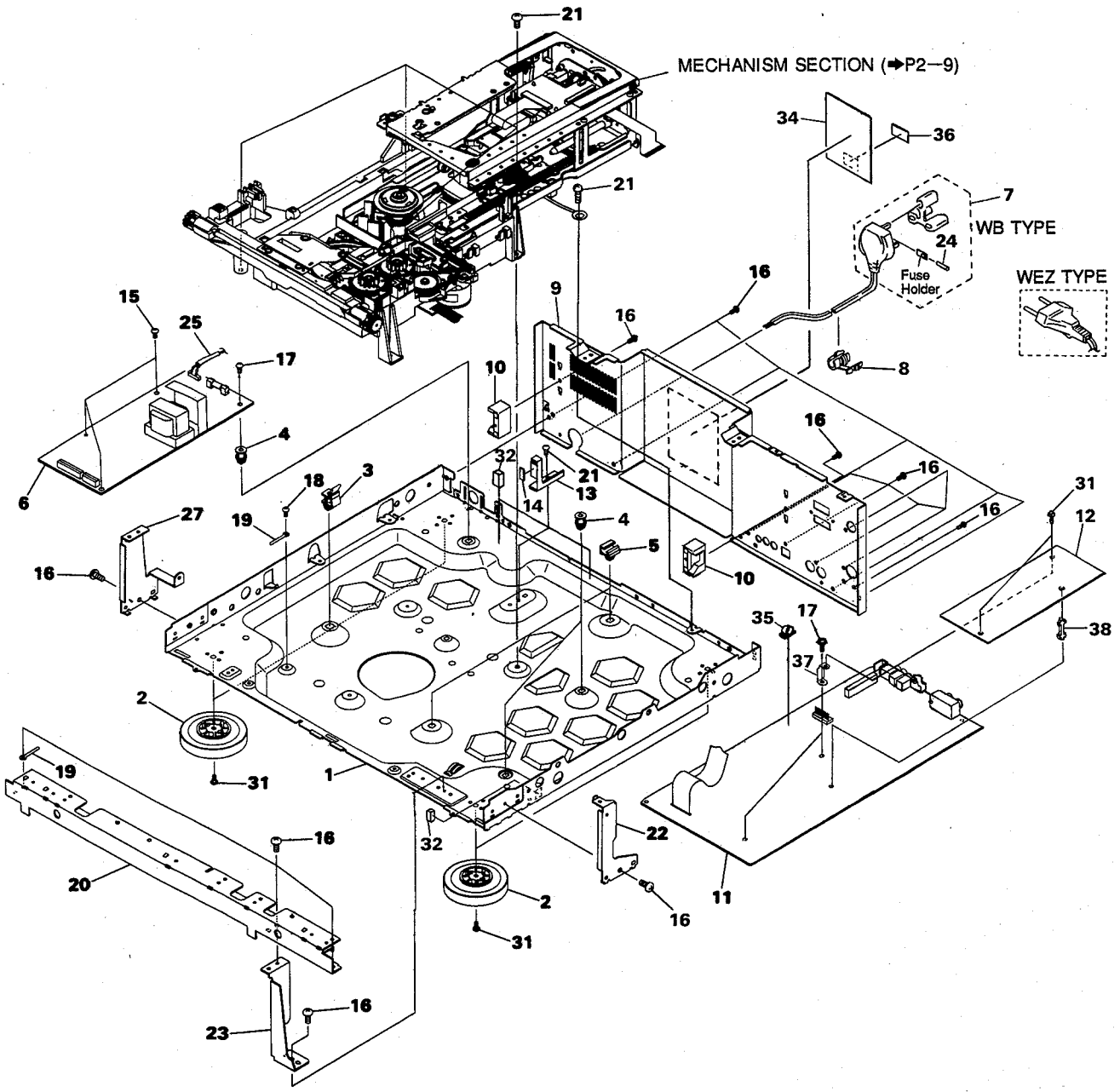

2.1.7 MECHANISM SECTION

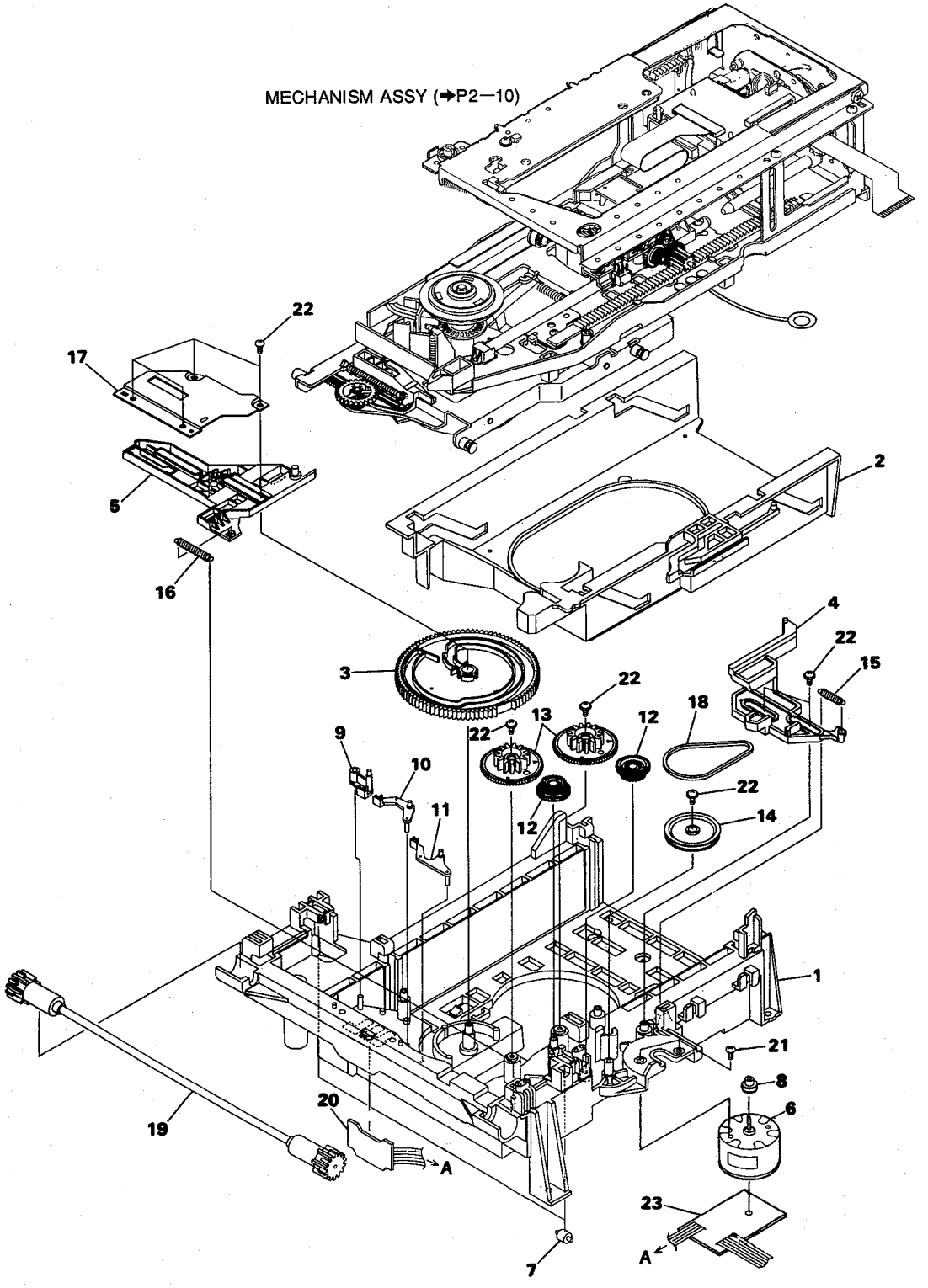

2.1.8 MECHANISM ASSY

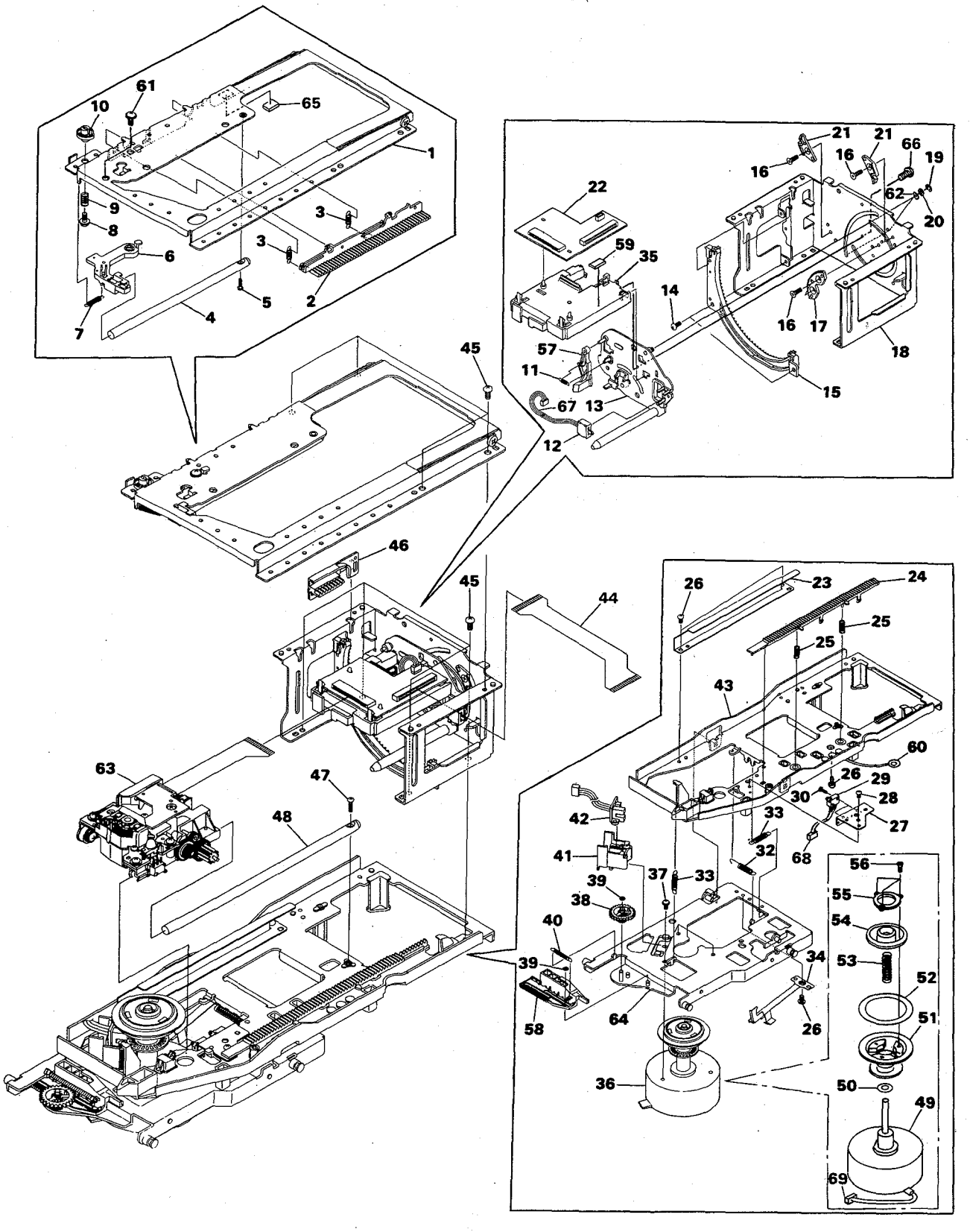

● This diagram is viewed from the mounted parts side.

PCB-2

POWER SUPPLY ASSY

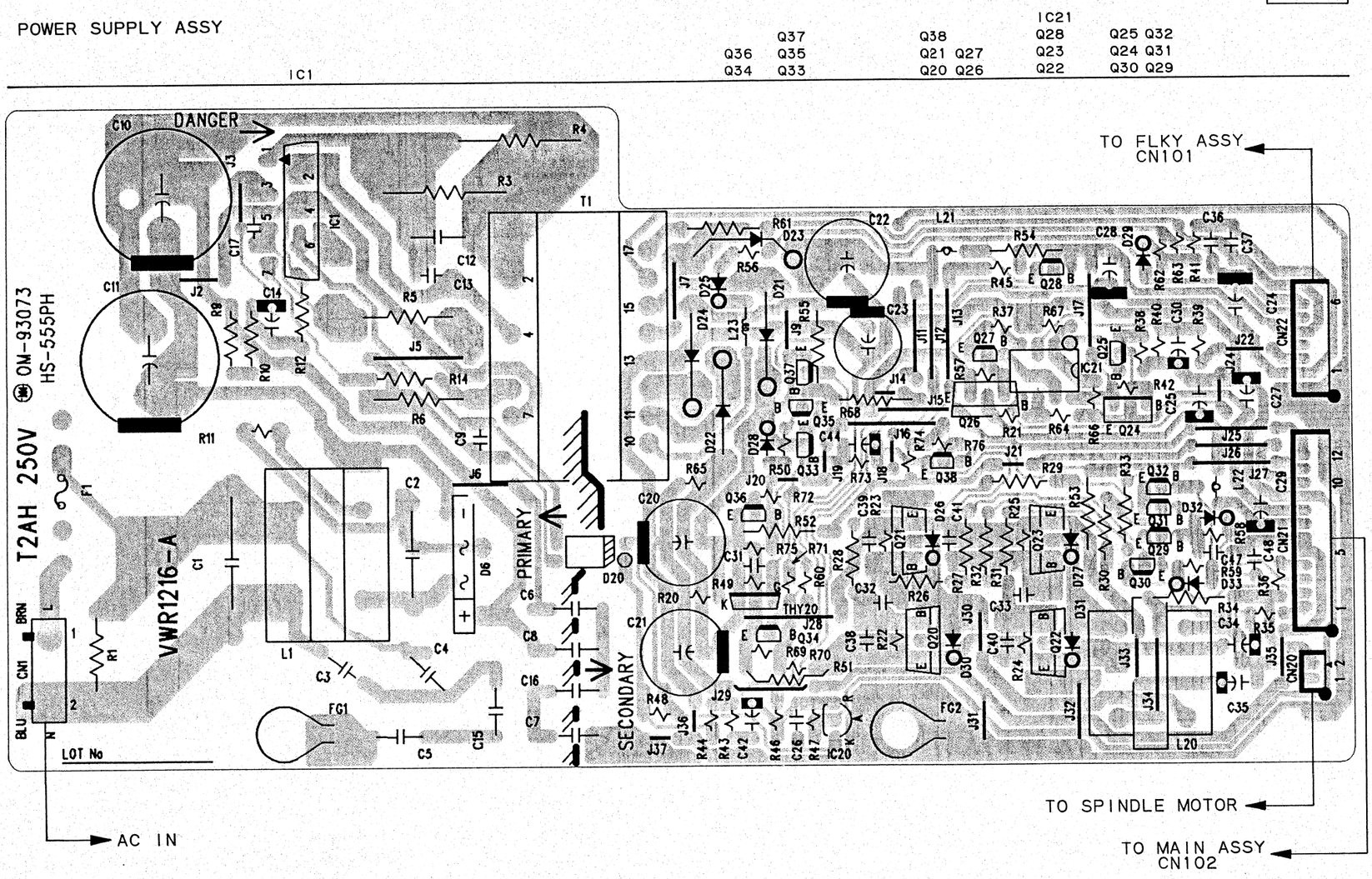

4 5 6 7 8

e.

PCB-2

	IC21	
Q38	Q28	Q25 Q32
Q21 Q27	Q23	Q24 Q31
Q20 Q26	Q22	Q30 Q29

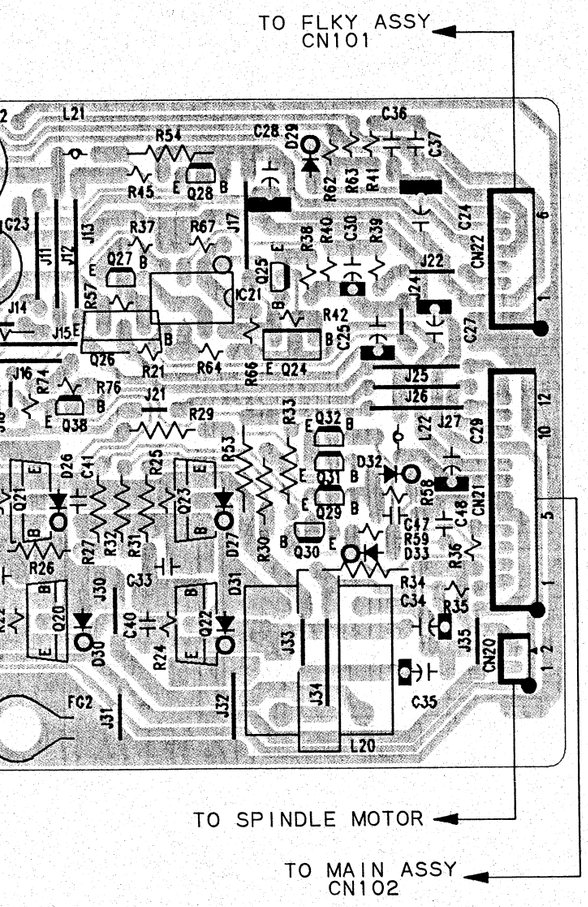

PCB-2

	IC21	
Q38	Q28	Q25 Q32
Q21 Q27	Q23	Q24 Q31
Q20 Q26	Q22	Q30 Q29

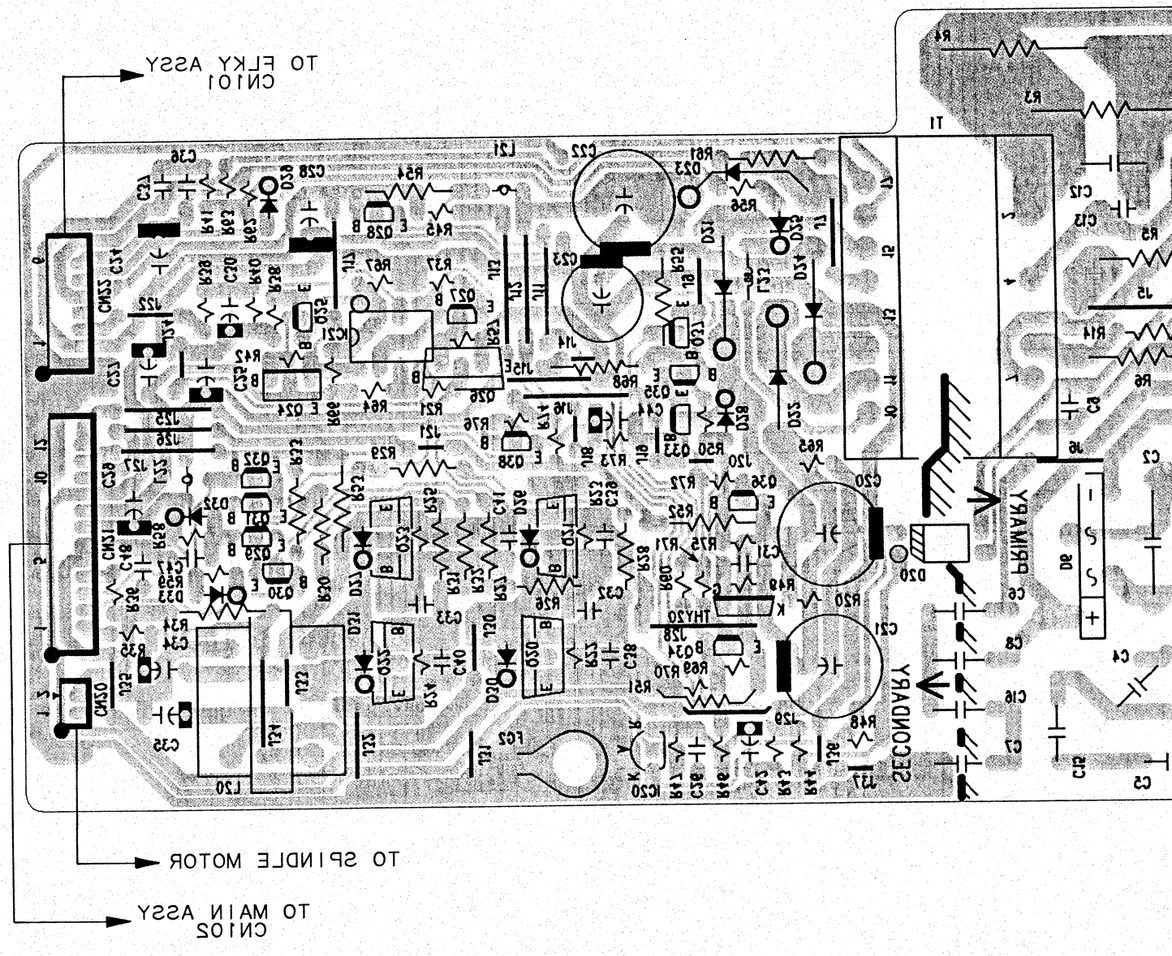

● This diagram is viewed from the foil side.

4 5 6 7 8

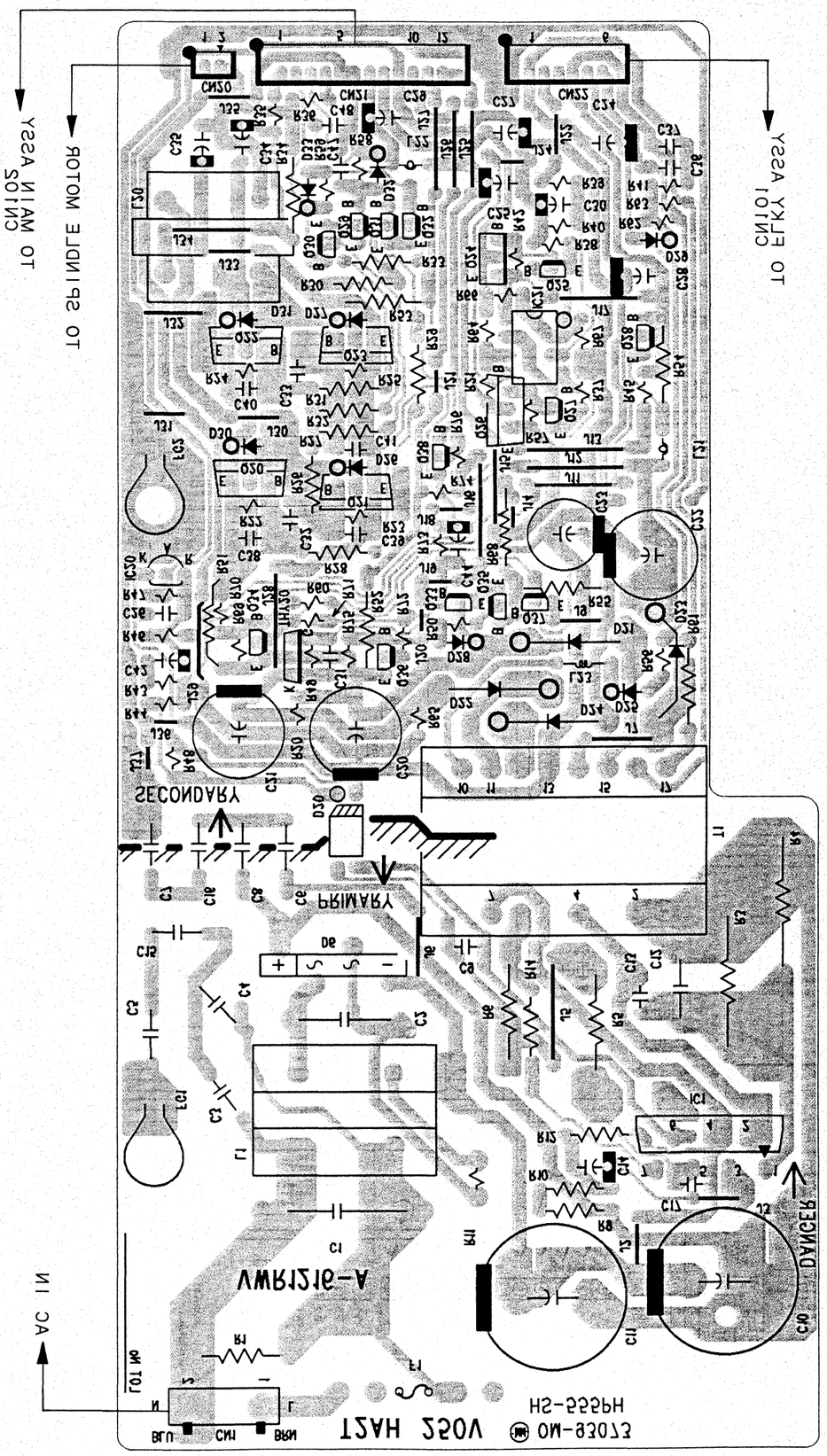

● This diagram is viewed from the foil side.

POWER SUPPLY ASSY

2.2.3 MAIN ASSEMBLY

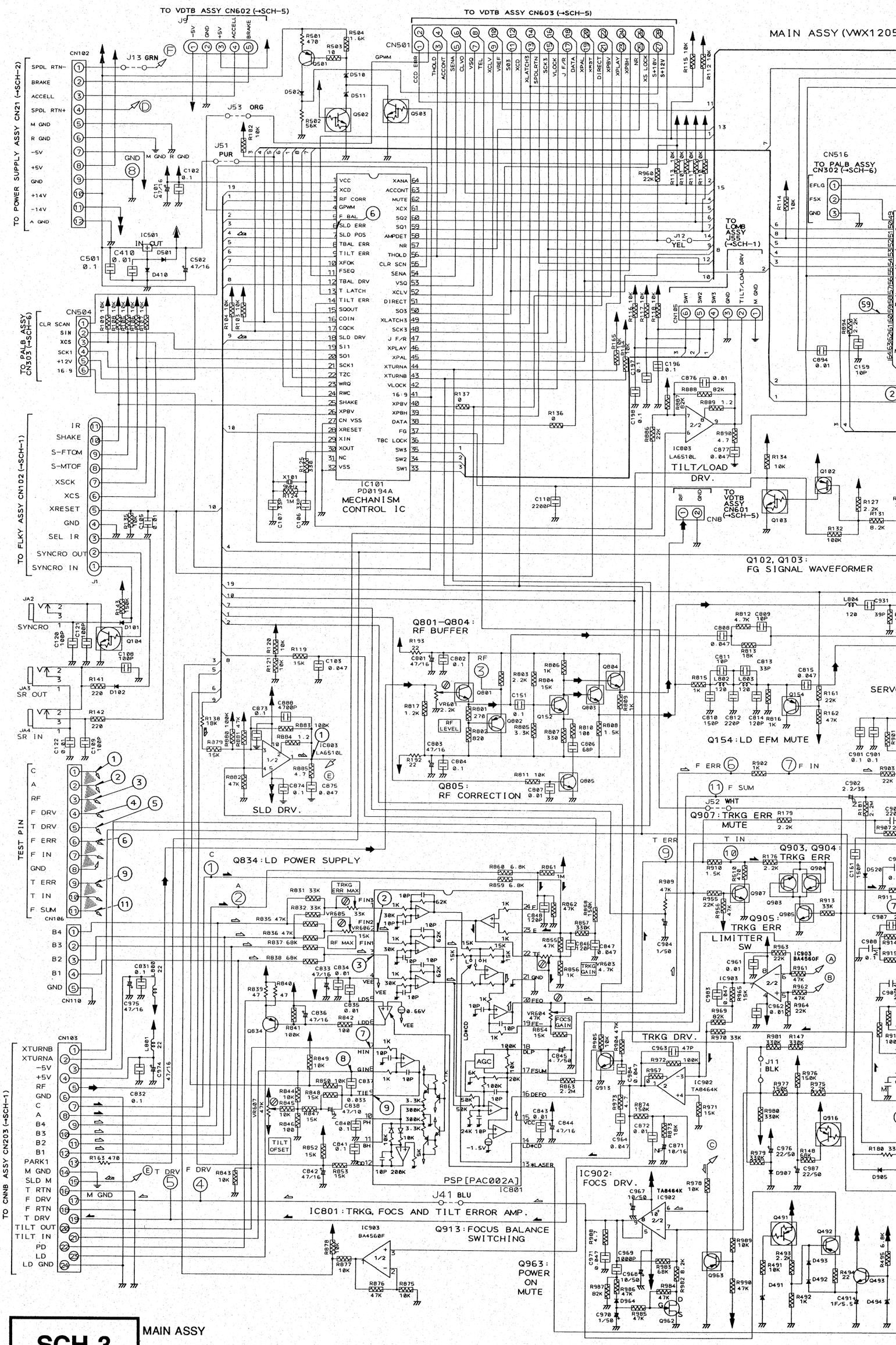

SCH-3 MAIN ASSY

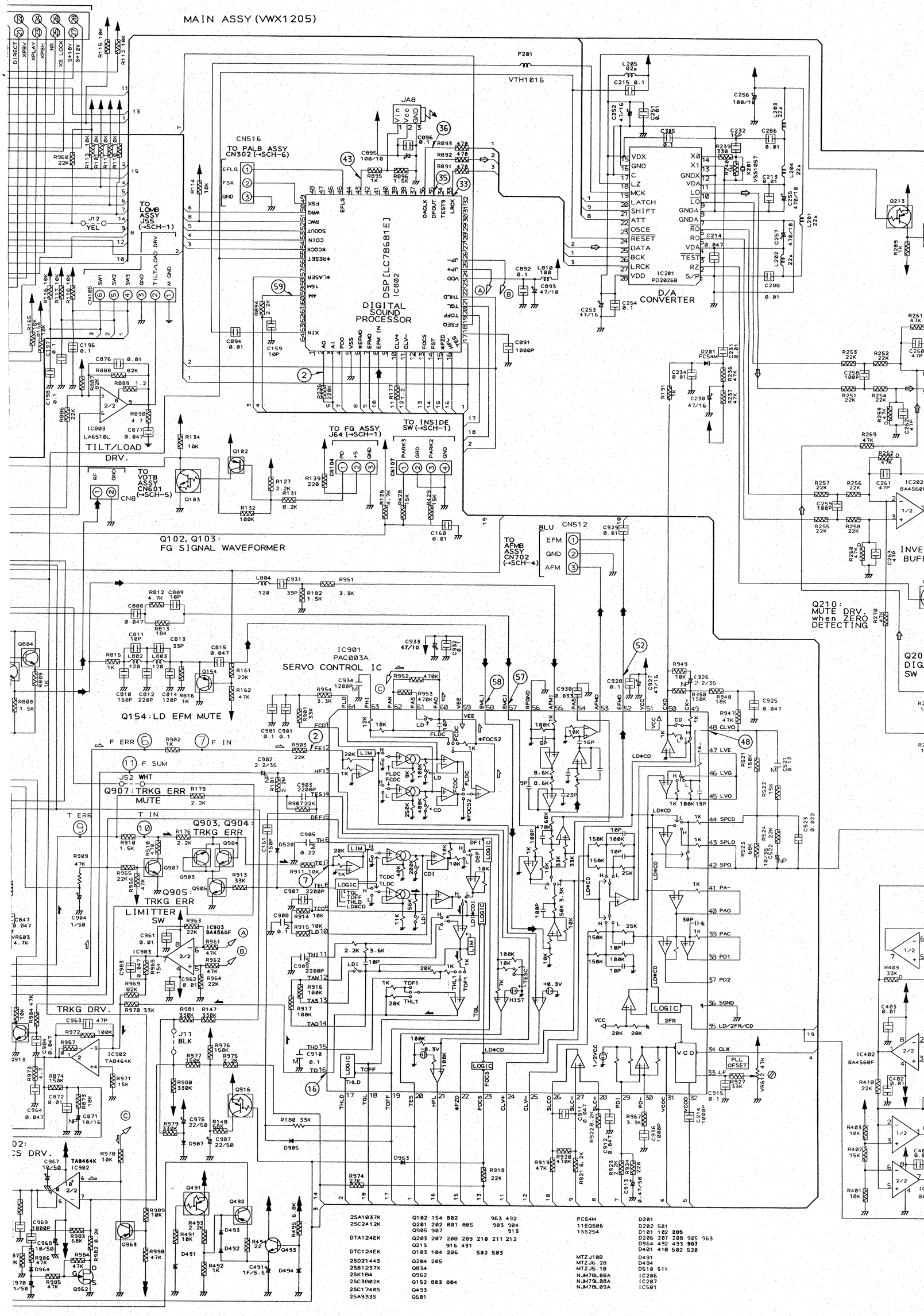
MAIN ASSY (VWX1205)
DSP [LC78681E]
IC801
DIGITAL SOUND PROCESSOR
IC901
PAC003A
SERVO CONTROL IC
IC201
PD2026B
D/A CONVERTER
TILT/LOAD DRV.
Q102, Q103:
FG SIGNAL WAVEFORMER
Q154:LD EFM MUTE
Q907:TRKG ERR MUTE
Q903, Q904:
TRKG ERR
Q905:
TRKG ERR
LIMITTER SW
TRKG DRV.
Q210:
MUTE DRV.
when ZERO DETECTING
TO PALB ASSY CN302 (→SCH-6)
TO LOMB ASSY J55 (→SCH-1)
TO VDTB ASSY CN601 (→SCH-5)
TO FG ASSY J64 (→SCH-1)
TO INSIDE SW (→SCH-1)
TO AFMB ASSY CN702 (→SCH-4)
CN512
BLU
EFM
GND
AFM
CN516
EFLG
FSX
GND
JA8
Vin
Vcc
GND
CN105
SW1
SW2
SW3
GND
TILT-LOAD DRV
M GND
CN104
PD
+5
GND
CN107
PARK3
GND
PARK2
GND
CN8
RF
GND
J12
YEL
J52
WHT
J11
BLK
F ERR
F IN
F SUM
T ERR
T IN
VTH1016
F201
L205 82μ
C215 0.1
C256 100/10
C252 47/16
C251 0.01
C385 0.1
C232 15P
C286 0.01
R239 330
R240 10
X201 VSS1057
C213 0.01
C255 470/10
L204 22μ
L203 22μ
L201 22μ
L202 22μ
C257 470/10
C214 0.047
C288 0.01
C253 47/16
C254 0.1
Q213
R289 47K
R261 47K
C260 47P
R253 22K
R252 22K
C258 100P
R251 22K
R254 22K
R259 47K
C262 47P
D201 FCS4M
C231 0.01
C234 0.01
C230 47/16
R191
R236 47K
R237 47K
R269 47K
R262 47K
C261 47P
IC202 BA4560F
R257 22K
R256 22K
C259 100P
R255 22K
R258 22K
R260 47K
C263 47P
INVE BUFF
R270 47K
R409 33K
C403 0.01
IC402 BA4560F
R410 22K
C402 0.01
R403 10K
R402 15K
R401 10K
C893 47/10
L810 100
C892 0.1
C891 1000P
C894 0.01
C159 10P
R894 2.2K
C196 0.1
C197 0.1
C198 0.1
C876 0.01
R888 82K
R889 1.2
R887 82K
R886 22K
R890 4.7
C877 0.047
IC803 LA6510L
R134 10K
Q102
Q103
R127 2.2K
R131 8.2K
R132 100K
R139 220
R126 4.7K
R428 15K
R429 15K
C160 0.01
R895 100/10
R896 1.5K
C896 0.1
R893 470
R892 470
R891 470
R114 10K
R960 22K
R113 10K
R115 10K
R112 10K
R116 10K
R117 10K
R118 10K
R165 10K
R119 10K
R326 220K
R177 12.2
C931
R951
R182 1.5K
3.3K
L804 120
39P
C809 10P
C808 0.047
R812 4.7K
R813 18K
C811 10P
C813 33P
C815 0.047
R815 1K
L802 120
L803 120
C810 150P
C812 220P
C814 120P
R816 1K
R161 22K
R162 47K
Q804
R808 1.5K
R803 1K
C933 47/10
C932 0.1
C934 1200P
R954 3.3K
R952 470K
R953 470K
C981 0.1
C901 0.1
R903 22K
C902 2.2/35
C903 2200P
R907 22K
R179 2.2K
R176 2.2K
R910 1.5K
R909 47K
C904 1/50
C905
C907 2200P
C900 0.1
R914 10K
R915 10K
C909 2200P
R916 100K
R917 100K
C910 0.1
C161 150P
D520 0.22
R911 10K
R913 33K
R955 22K
R956 47K
R963 22K
R961 47K
R962 47K
R964 22K
R965 15K
C961 0.01
C962 0.01
C963 47P
R972 100K
R957 47K
IC902 TA8464K
R973 4.7
R974 150K
R975 2.2K
R971 15K
C964 0.047
C872 0.01
R873 18K
C871 10/16
R969 82K
R970 33K
R981 330K
R147 330K
R976 150K
R977 150K
R980 330K
R979 330K
C976 22/50
R148 68K
C987 22/50
D907
D905
R978 10K
R180 33K
Q916
C967 10/50
IC902 TA8464K
R989 10K
Q963
Q491
Q492
R493 2.2K
R491 10K
D491
D493
D492
R494 22
Q493
R495 6.8K
R492 1K
C491 1F/5.5
D494
R985 47K
Q962
R984 47K
R982 6.2K
R983 68K
C968 10/50
C969 1000P
R986 47K
D964
R949 10K
C926 2.2/35
R950 150K
R948 18K
C925 0.047
R947 47K
C928 0.1
C927 47/16
C929 0.01
C930 0.033
R921 6.2K
R920 470K
R919 47K
R918 22K
R974 33K
R967 3.3K
C936 1000P
C914 1000P
C915 0.1
R927 33K
VR601 47K
PLL OFSET
VCO
LOGIC
2FR
R521 150K
R522 15K
C521 0.12
R523 68K
R524 22K
C522 10
C523 0.022
R228 2.2K
C917 0.047
R923 2.2K
C913 0.47/50
R229 220
R226 2.2K
C916 0.47/50
R225 220
R227 2.2K
C918 0.47/50
R224 220
R223 2.2K
C919 0.47/50
R222 220
R221 2.2K
C920 0.47/50
R220 220
R219 2.2K
C921 0.47/50
R218 220
R217 2.2K
C922 0.47/50
R216 220
R215 2.2K
C923 0.47/50
R214 220
R213 2.2K
C924 0.47/50
R212 220
R211 2.2K
C925 0.47/50
R210 220
R209 2.2K
C926 0.47/50
R208 220
R207 2.2K
C927 0.47/50
R206 220
R205 2.2K
C928 0.47/50
R204 220
R203 2.2K
C929 0.47/50
R202 220
R201 2.2K
C930 0.47/50
R200 220
R199 2.2K
C931 0.47/50
R198 220
R197 2.2K
C932 0.47/50
R196 220
R195 2.2K
C933 0.47/50
R194 220
R193 2.2K
C934 0.47/50
R192 220
R191 2.2K
C935 0.47/50
R190 220
R189 2.2K
C936 0.47/50
R188 220
R187 2.2K
C937 0.47/50
R186 220
R185 2.2K
C938 0.47/50
R184 220
R183 2.2K
C939 0.47/50
R182 220
R181 2.2K
C940 0.47/50
R180 220
R179 2.2K
C941 0.47/50
R178 220
R177 2.2K
C942 0.47/50
R176 220
R175 2.2K
C943 0.47/50
R174 220
R173 2.2K
C944 0.47/50
R172 220
R171 2.2K
C945 0.47/50
R170 220
R169 2.2K
C946 0.47/50
R168 220
R167 2.2K
C947 0.47/50
R166 220
R165 2.2K
C948 0.47/50
R164 220
R163 2.2K
C949 0.47/50
R162 220
R161 2.2K
C950 0.47/50
R160 220
R159 2.2K
C951 0.47/50
R158 220
R157 2.2K
C952 0.47/50
R156 220
R155 2.2K
C953 0.47/50
R154 220
R153 2.2K
C954 0.47/50
R152 220
R151 2.2K
C955 0.47/50
R150 220
R149 2.2K
C956 0.47/50
R148 220
R147 2.2K
C957 0.47/50
R146 220
R145 2.2K
C958 0.47/50
R144 220
R143 2.2K
C959 0.47/50
R142 220
R141 2.2K
C960 0.47/50
R140 220
R139 2.2K
C961 0.47/50
R138 220
R137 2.2K
C962 0.47/50
R136 220
R135 2.2K
C963 0.47/50
R134 220
R133 2.2K
C964 0.47/50
R132 220
R131 2.2K
C965 0.47/50
R130 220
R129 2.2K
C966 0.47/50
R128 220
R127 2.2K
C967 0.47/50
R126 220
R125 2.2K
C968 0.47/50
R124 220
R123 2.2K
C969 0.47/50
R122 220
R121 2.2K
C970 0.47/50
R120 220
R119 2.2K
C971 0.47/50
R118 220
R117 2.2K
C972 0.47/50
R116 220
R115 2.2K
C973 0.47/50
R114 220
R113 2.2K
C974 0.47/50
R112 220
R111 2.2K
C975 0.47/50
R110 220
R109 2.2K
C976 0.47/50
R108 220
R107 2.2K
C977 0.47/50
R106 220
R105 2.2K
C978 0.47/50
R104 220
R103 2.2K
C979 0.47/50
R102 220
R101 2.2K
C980 0.47/50
R100 220
R99 2.2K
C981 0.47/50
R98 220
R97 2.2K
C982 0.47/50
R96 220
R95 2.2K
C983 0.47/50
R94 220
R93 2.2K
C984 0.47/50
R92 220
R91 2.2K
C985 0.47/50
R90 220
R89 2.2K
C986 0.47/50
R88 220
R87 2.2K
C987 0.47/50
R86 220
R85 2.2K
C988 0.47/50
R84 220
R83 2.2K
C989 0.47/50
R82 220
R81 2.2K
C990 0.47/50
R80 220
R79 2.2K
C991 0.47/50
R78 220
R77 2.2K
C992 0.47/50
R76 220
R75 2.2K
C993 0.47/50
R74 220
R73 2.2K
C994 0.47/50
R72 220
R71 2.2K
C995 0.47/50
R70 220
R69 2.2K
C996 0.47/50
R68 220
R67 2.2K
C997 0.47/50
R66 220
R65 2.2K
C998 0.47/50
R64 220
R63 2.2K
C999 0.47/50
R62 220
R61 2.2K
C1000 0.47/50
R60 220
R59 2.2K
C1001 0.47/50
R58 220
R57 2.2K
C1002 0.47/50
R56 220
R55 2.2K
C1003 0.47/50
R54 220
R53 2.2K
C1004 0.47/50
R52 220
R51 2.2K
C1005 0.47/50
R50 220
R49 2.2K
C1006 0.47/50
R48 220
R47 2.2K
C1007 0.47/50
R46 220
R45 2.2K
C1008 0.47/50
R44 220
R43 2.2K
C1009 0.47/50
R42 220
R41 2.2K
C1010 0.47/50
R40 220
R39 2.2K
C1011 0.47/50
R38 220
R37 2.2K
C1012 0.47/50
R36 220
R35 2.2K
C1013 0.47/50
R34 220
R33 2.2K
C1014 0.47/50
R32 220
R31 2.2K
C1015 0.47/50
R30 220
R29 2.2K
C1016 0.47/50
R28 220
R27 2.2K
C1017 0.47/50
R26 220
R25 2.2K
C1018 0.47/50
R24 220
R23 2.2K
C1019 0.47/50
R22 220
R21 2.2K
C1020 0.47/50
R20 220
R19 2.2K
C1021 0.47/50
R18 220
R17 2.2K
C1022 0.47/50
R16 220
R15 2.2K
C1023 0.47/50
R14 220
R13 2.2K
C1024 0.47/50
R12 220
R11 2.2K
C1025 0.47/50
R10 220
R9 2.2K
C1026 0.47/50
R8 220
R7 2.2K
C1027 0.47/50
R6 220
R5 2.2K
C1028 0.47/50
R4 220
R3 2.2K
C1029 0.47/50
R2 220
R1 2.2K
C1030 0.47/50
R0 220
2SA1037K
2SC2412K
DTA124EK
DTC124EK
2SD2144S
2SB1237X
2SK184
2SC3802K
2SC1740S
2SA933S
Q102 154 802 963 492
Q201 202 801 805 903 904
Q905 907 913
Q203 207 208 209 210 211 212
Q213 916 491
Q103 104 206 502 503
Q204 205
Q854
Q962
Q152 803 804
Q493
Q501
FCS4M
11EQS06
1SS254
MTZJ10B
MTZJ6.2B
MTZJ5.1B
NJM78L08A
NJM79L08A
NJM78L09A
D201
D202 501
D101 102 205
D206 207 208 905 963
D964 492 493 907
D401 410 502 520
D491
D494
D510 511
IC206
IC207
IC501

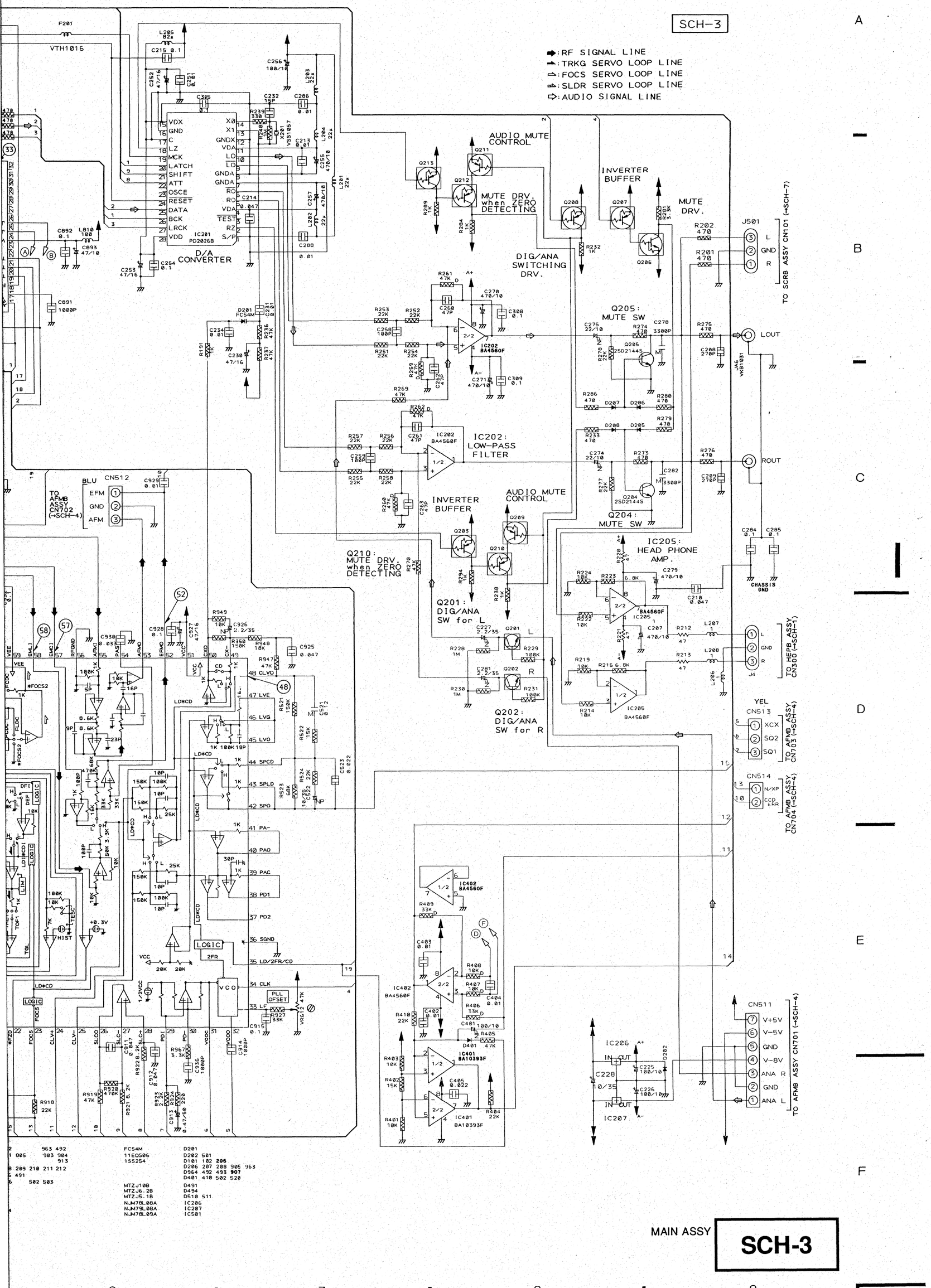

MAIN ASSY **SCH-3**

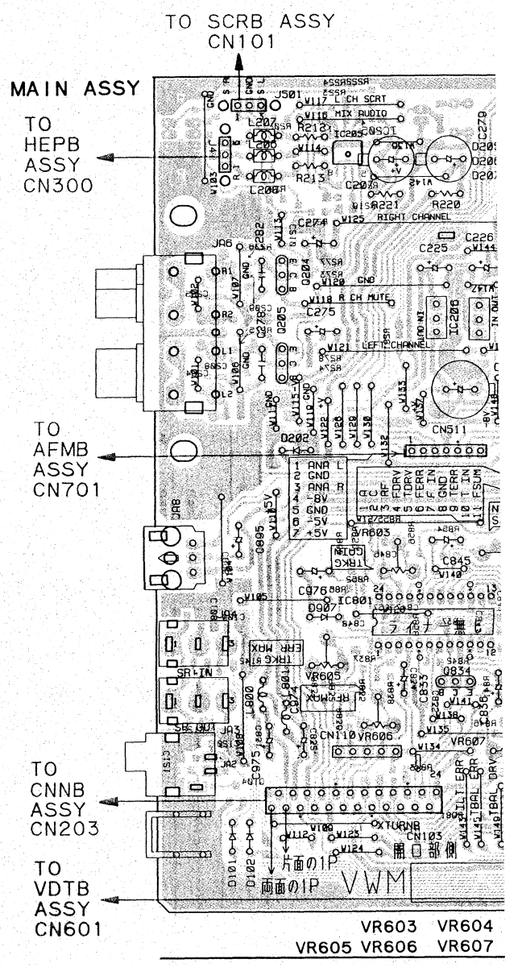

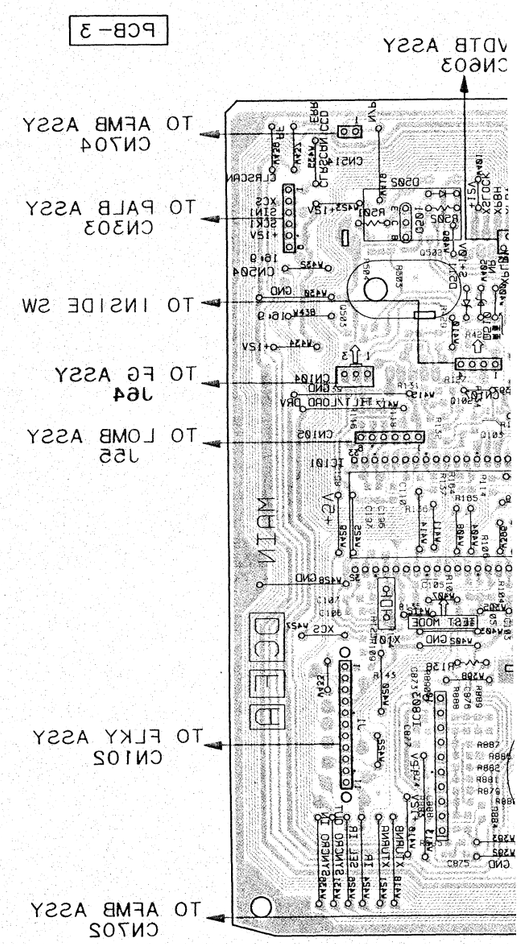

MAIN ASSEMBLY

Note: (No.) in the table correspond to the pin number.

Measurement condition: In case when (D.audio) is written, at time when disc that has digital audio recording is played.

IC801(PAC002A)	IC802(LC78681E)	IC803(LA6510L)	IC901(PAC003A)	CN106	IC101 (PD0194A)
②, ③ 1mS/Div. 16mVp-p AC mode	② 0.1μS/Div. 4.3Vp-p AC mode(D.audio)	① 2mS/Div. 1.8Vp-p 0V DC mode	② 0.2mS/Div. 74mVp-p 0V DC mode	①, ② 5mS/Div. 65mVp-p 0V DC mode	⑥ 1V/Div 5mS/Div approx. 1.8V 0V DC mode (Sldr err)
⑦, ⑧ 1mS/Div. 67mVp-p 0V DC mode	㉝ 10μS/Div. 4.2Vp-p AC mode(D.audio)		⑦ 0.2mS/Div. 74mVp-p 0V DC mode	③ 0.5mS/Div. 300mVp-p AC mode	
⑨ 5mS/Div. 0.1Vp-p 0V DC mode	㉟ 0.2μS/Div. 4.4Vp-p AC mode(D.audio)		⑯ 0.2mS/Div. 0.61Vp-p 0V DC mode	④ 5mS/Div. 15Vp-p 0V DC mode	
	㊱ 0.2μS/Div. 4.5Vp-p AC mode(D.audio)		㊽ 50μS/Div. 6.2Vp-p 0V DC mode	⑤ 5mS/Div. 5.8Vp-p 0V DC mode	
	㊸ 0.1μS/Div. 4.5Vp-p AC mode(D.audio)		㊷ 0.2μS/Div. 2.1Vp-p AC mode	⑥ 5mS/Div. 3.5Vp-p 0V DC mode	
	㊾ 0.1μS/Div. 2Vp-p AC mode(D.audio)		㊼ 1mS/Div. 0.53Vp-p 0V DC mode	⑨ 5mS/Div. 1.25Vp-p 0V DC mode	
			㊽ 0.2mS/Div. 0.32Vp-p 0V DC mode	⑪ 10mS/Div. 1.7Vp-p DC mode	

● This diagram is viewed from the mounted parts side.

PCB-3

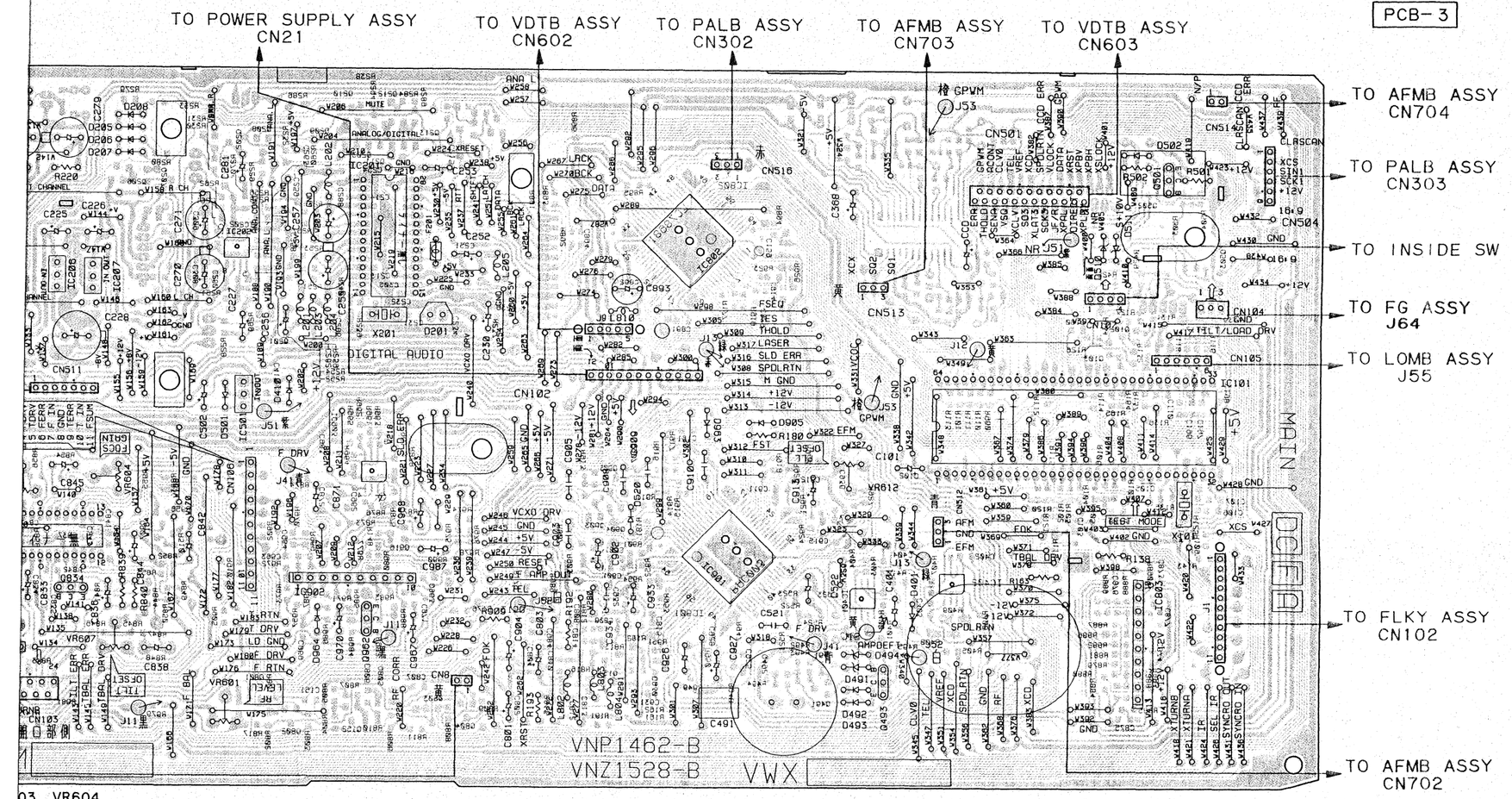

● This diagram is viewed from the foil side.

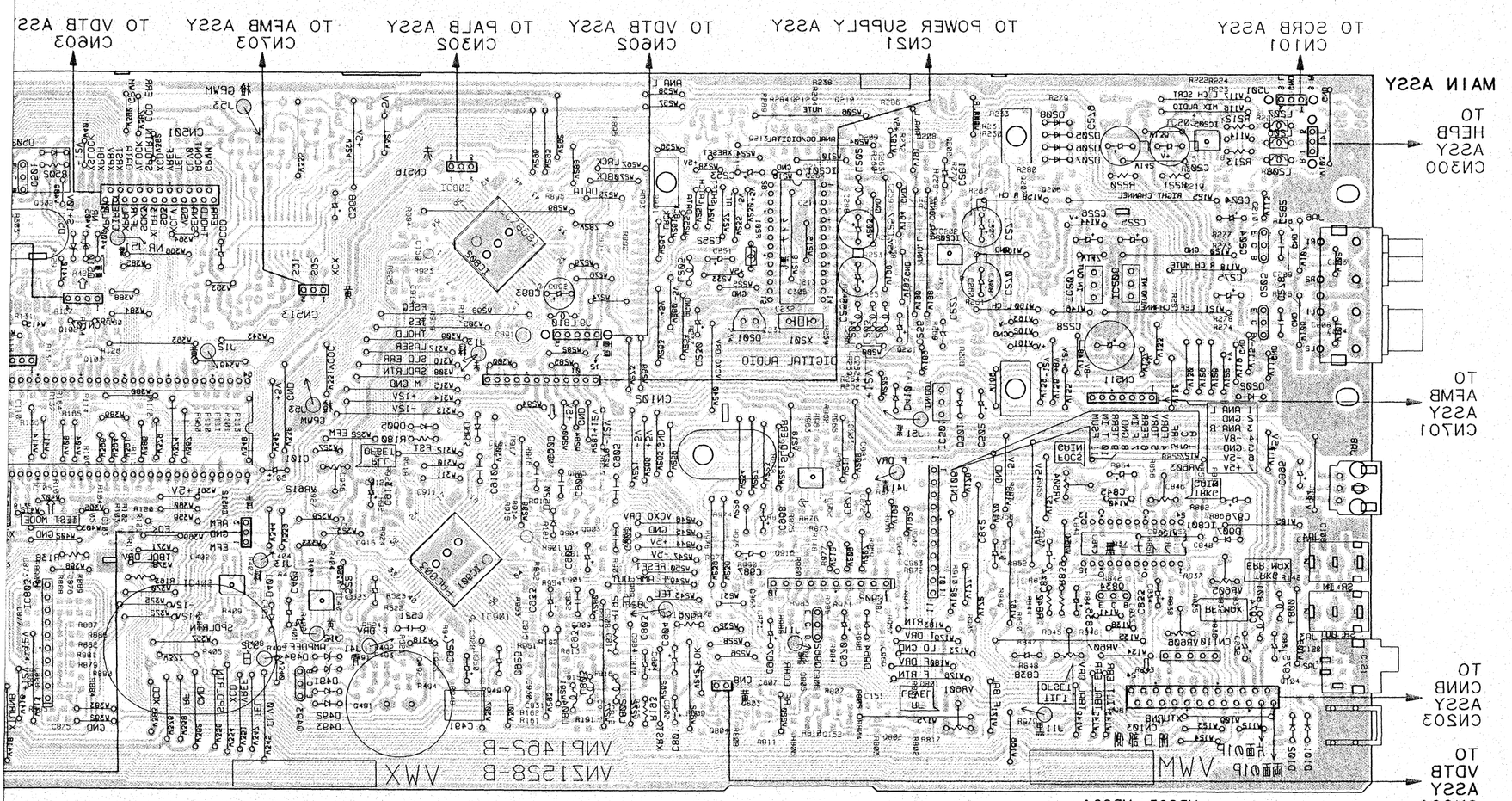

2.2.4 AFMB ASSEMBLY

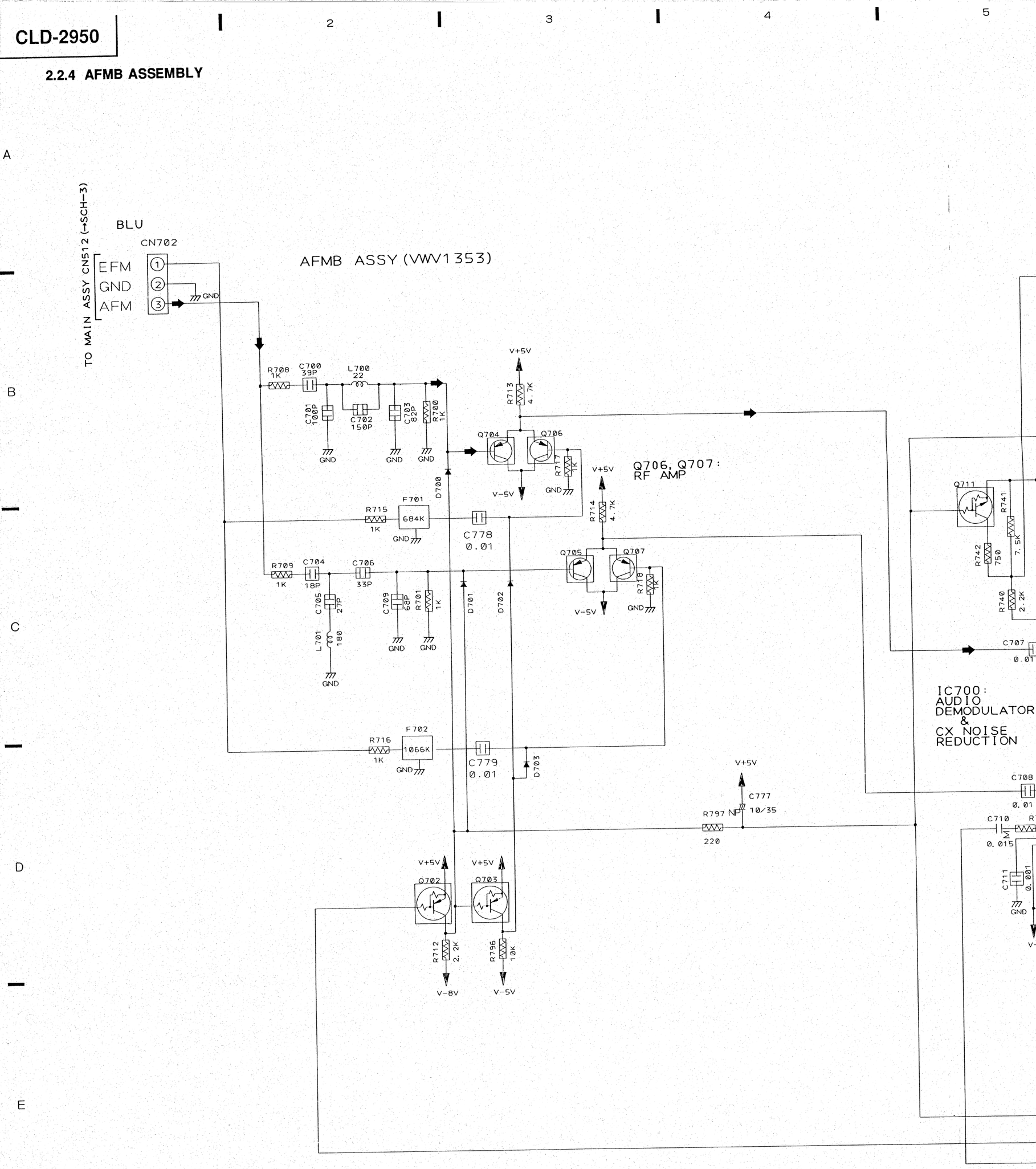

SCH-4 AFMB ASSY

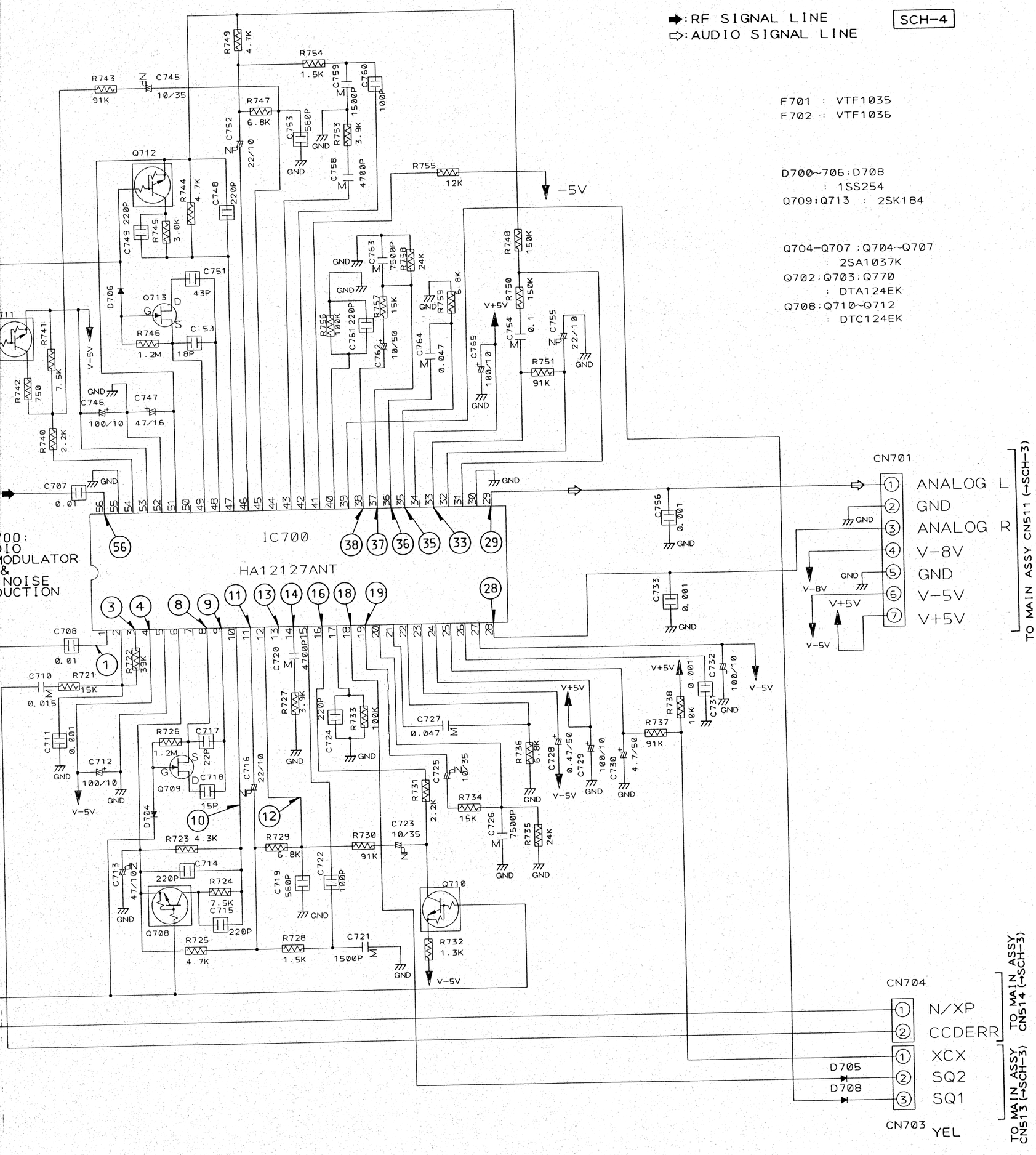

AFMB ASSY

SCH-4

AFMB ASSEMBLY

- IC700(HA12127ANT) Note : (No.) in the table correspond to the pin No.

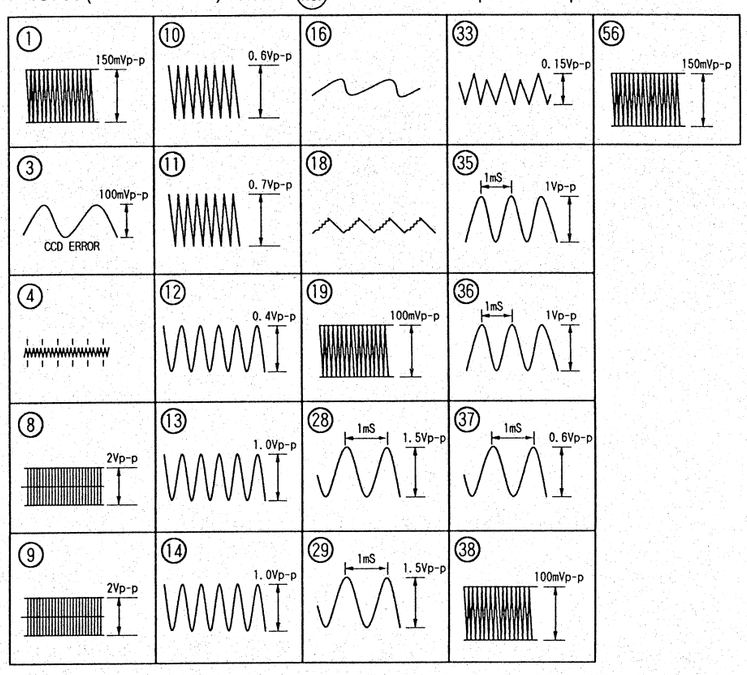

TO MAIN ASSY
CN511

PCB-4

TO MAIN ASSY
CN514

TO MAIN ASSY
CN512

TO MAIN ASSY
CN513

VNP1462-B

● This diagram is viewed from the mounted parts side.

AFMB ASSY

PCB-4

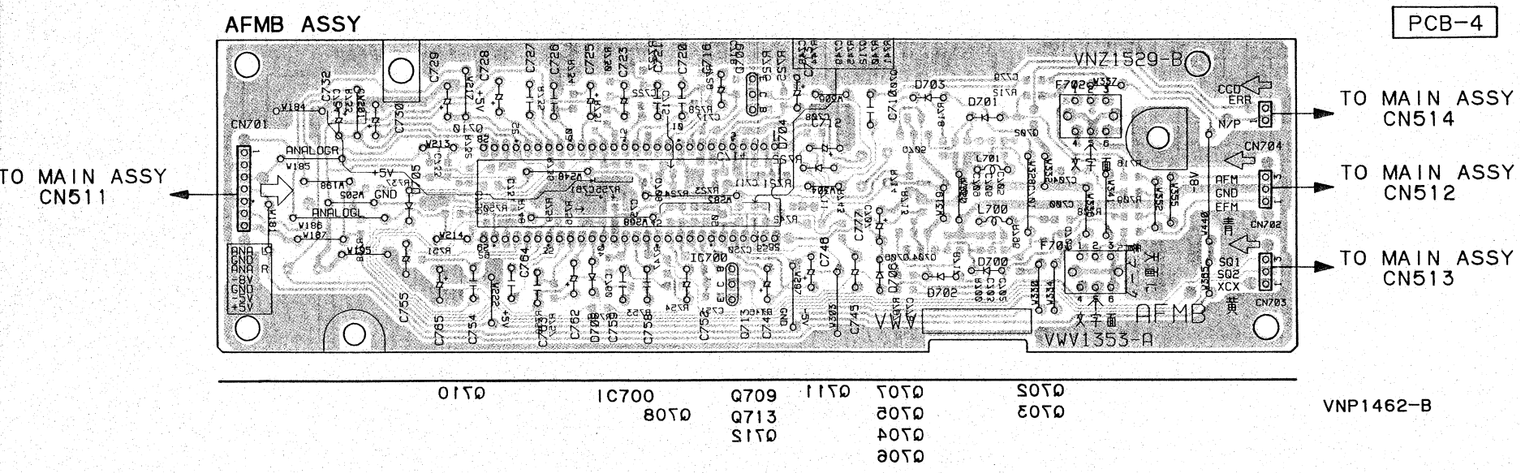

VNP1462-B

● This diagram is viewed from the foil side.

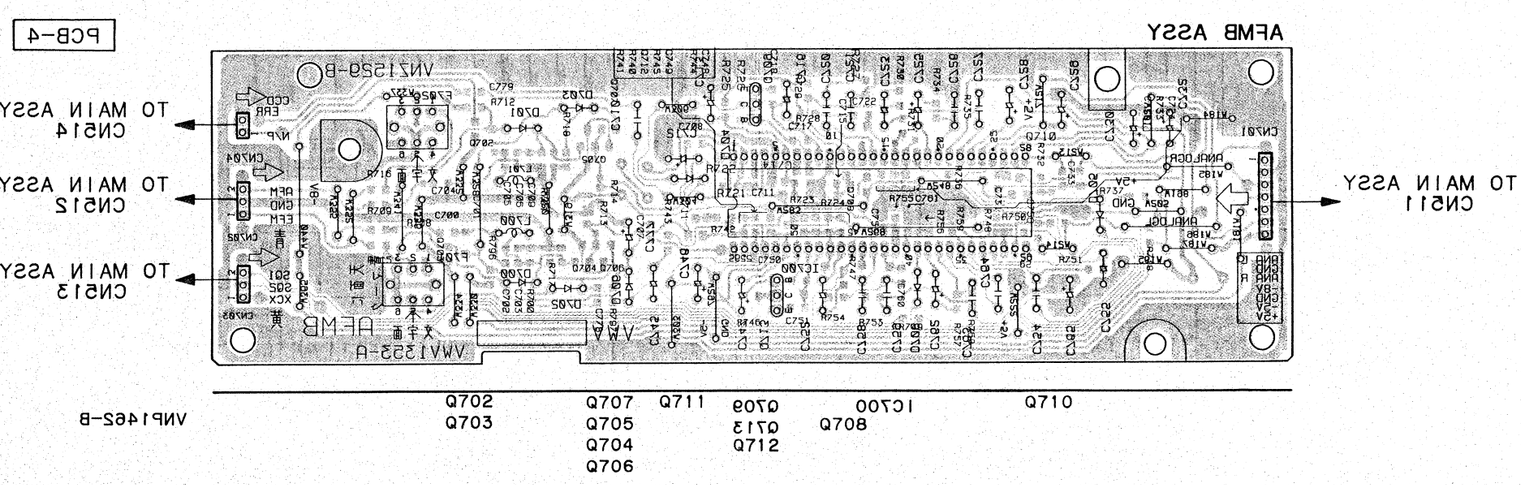

VNP1462-B

2.2.5 VDTB ASSEMBLY

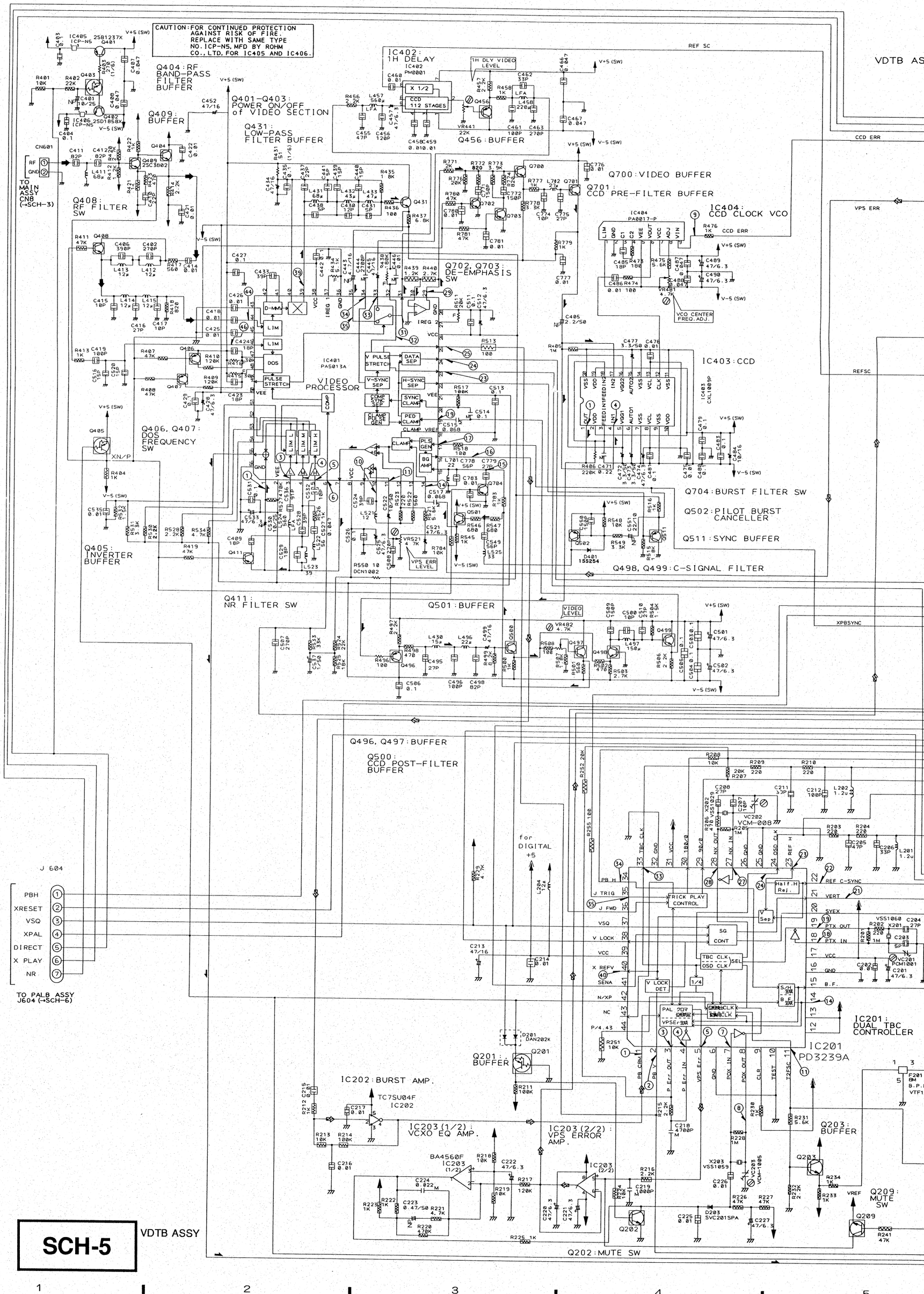

SCH-5

DTA124EK Q201 403 405 606 609 621 622 623
2SC2412K Q202 203 205 206 208 209 210 404 408 497 498
Q499 500 501 601 602 603 604 605 608 614 619
Q620 626 700 701 702
2SA1037K Q204 207 406 407 411 456 496 502 511 611 615 627 703 704
2SB1237X Q401
2SD1858X Q402
2SC3802K Q409
2SC1740S Q431
DTC124EK Q607 610 612 613 624 625

➡: RF SIGNAL LINE
➖: VIDEO SIGNAL LINE
⇨: SPINDLE SERVO LOOP LINE

SCH-5

VDTB ASSY (VWS1130)

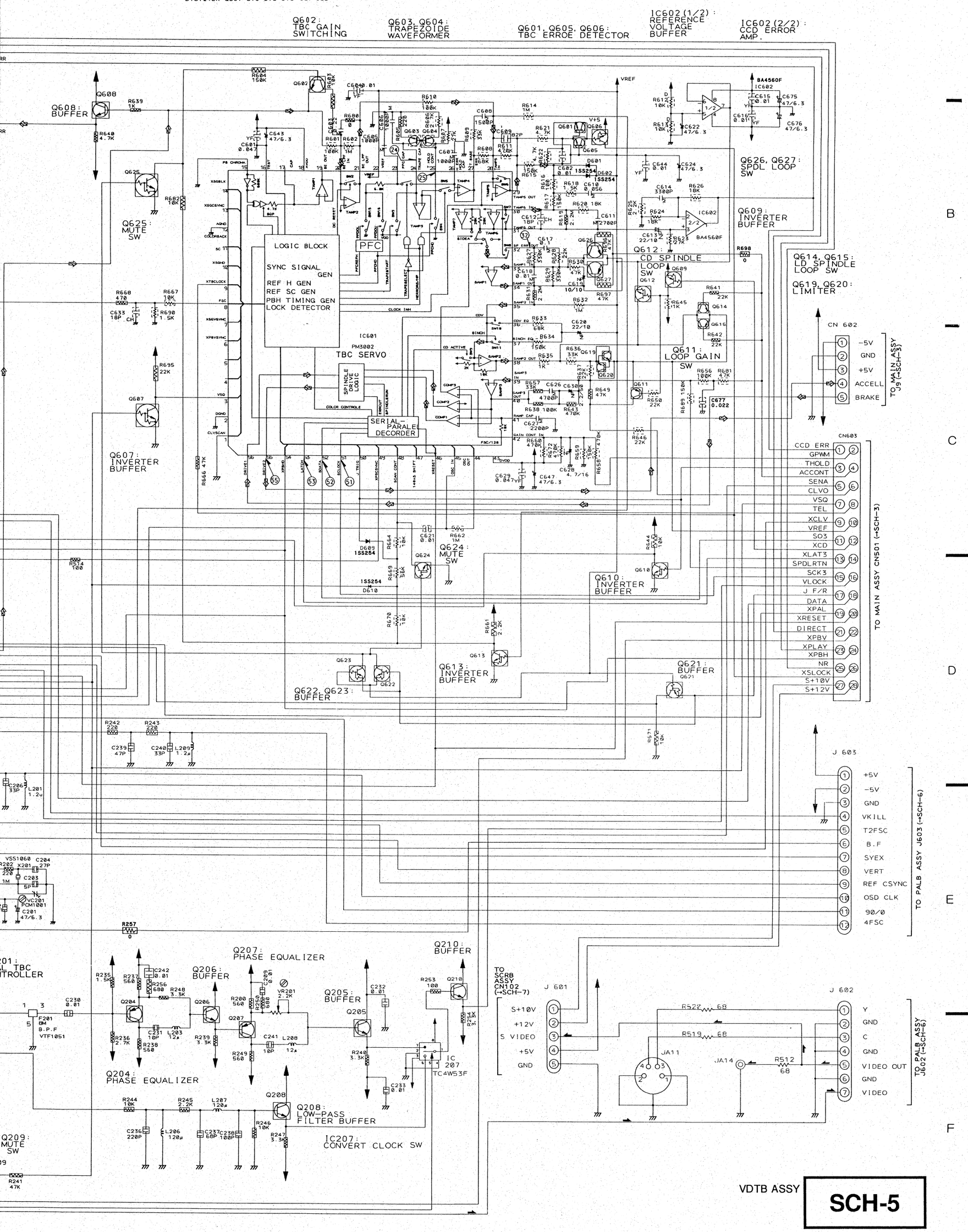

VDTB ASSY

SCH-5

VDTB ASSEMBLY

Note: (No.) in the table correspond to the pin number.

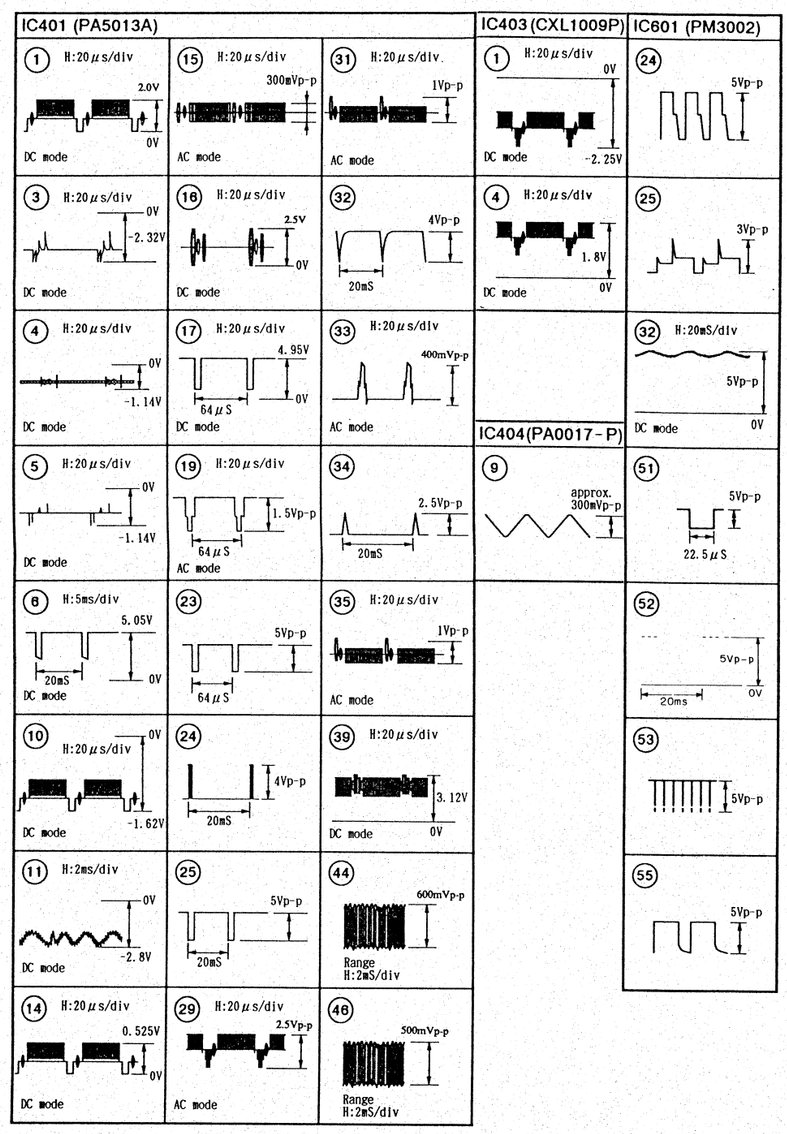

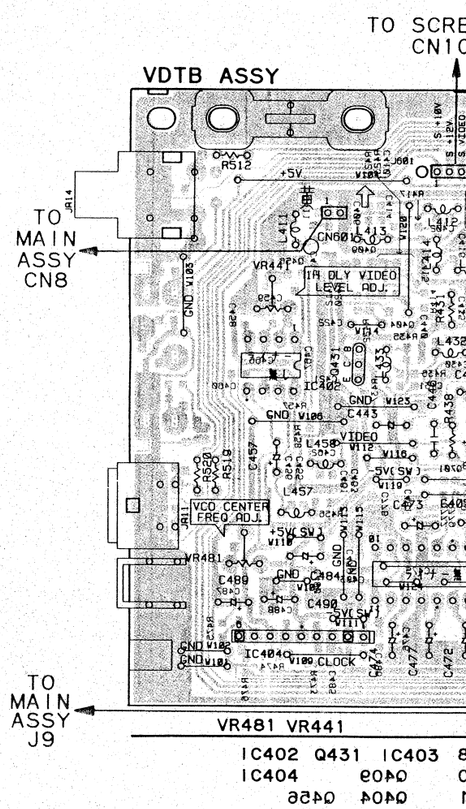

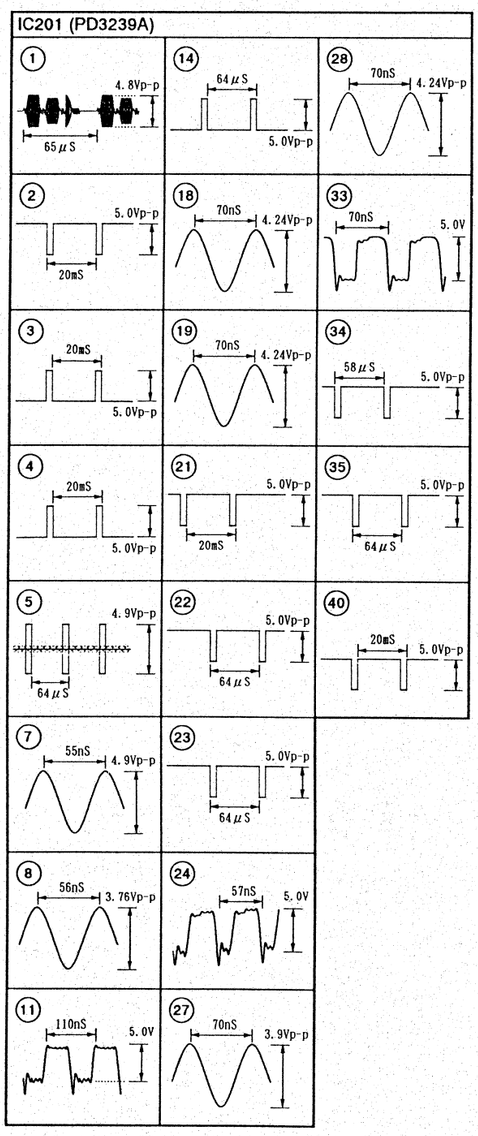

Note : These waveforms and voltage are in the PAL DISC playback.

● IC201 (PD3239A)

Pin No.	Voltage (V)	Pin No.	Voltage (V)	Pin No.	Voltage (V)	Pin No.	Voltage (V)
1	*	12	5.0	23	*	34	*
2	*	13	5.0	24	*	35	*
3	*	14	*	25	0	36	5.0
4	*	15	5.0	26	0	37	5.0
5	*	16	0	27	*	38	5.0
6	0	17	5.0	28	*	39	5.0
7	*	18	*	29	5.0	40	*
8	*	19	*	30	5.0	41	0
9	5.0	20	5.0	31	5.0	42	0
10	0	21	*	32	0	43	5.0
11	*	22	*	33	*	44	5.0

* : Refer to waveforms

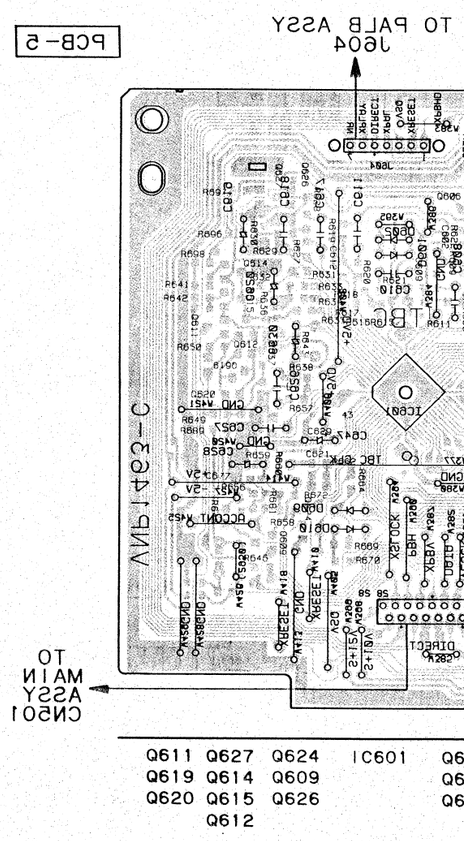

● This diagram is viewed from the mounted parts side.

PCB-5

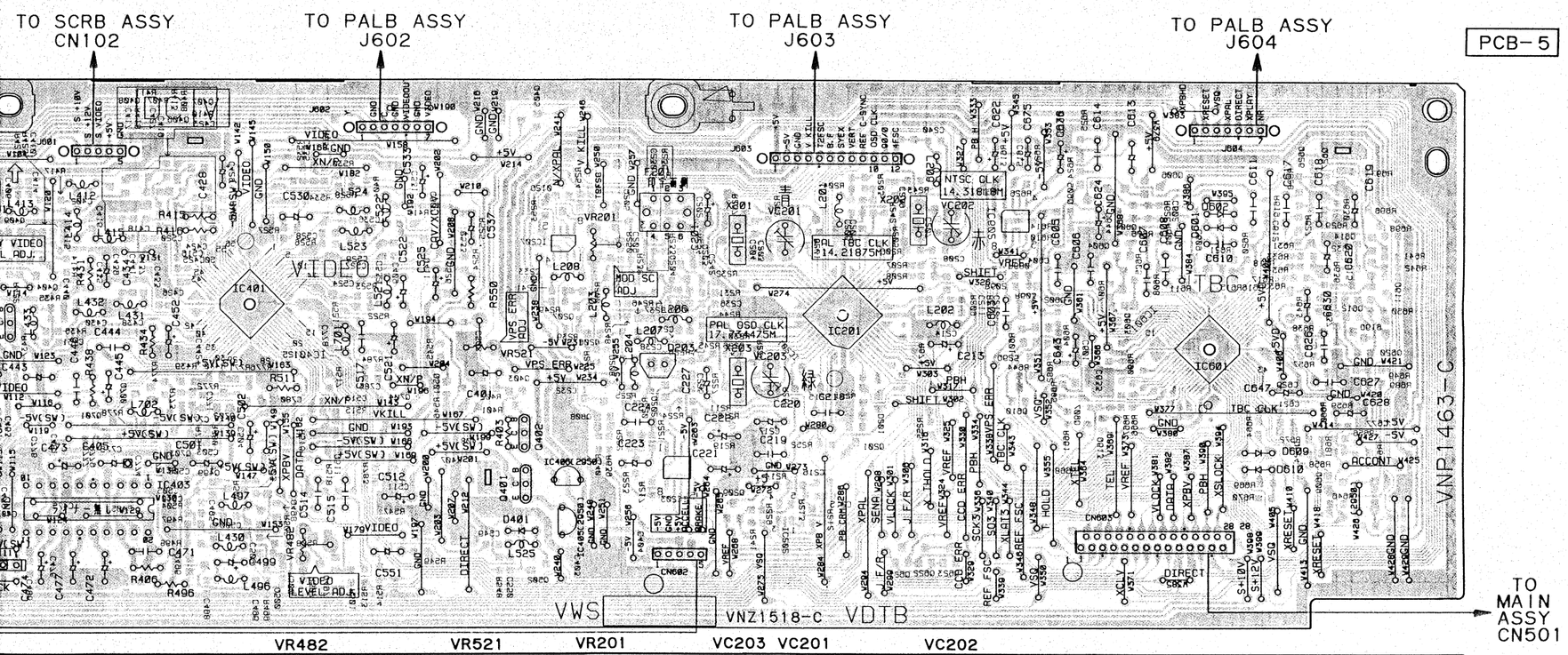

| | | |

2.2.6 PALB AND YCNR ASSEMBLIES

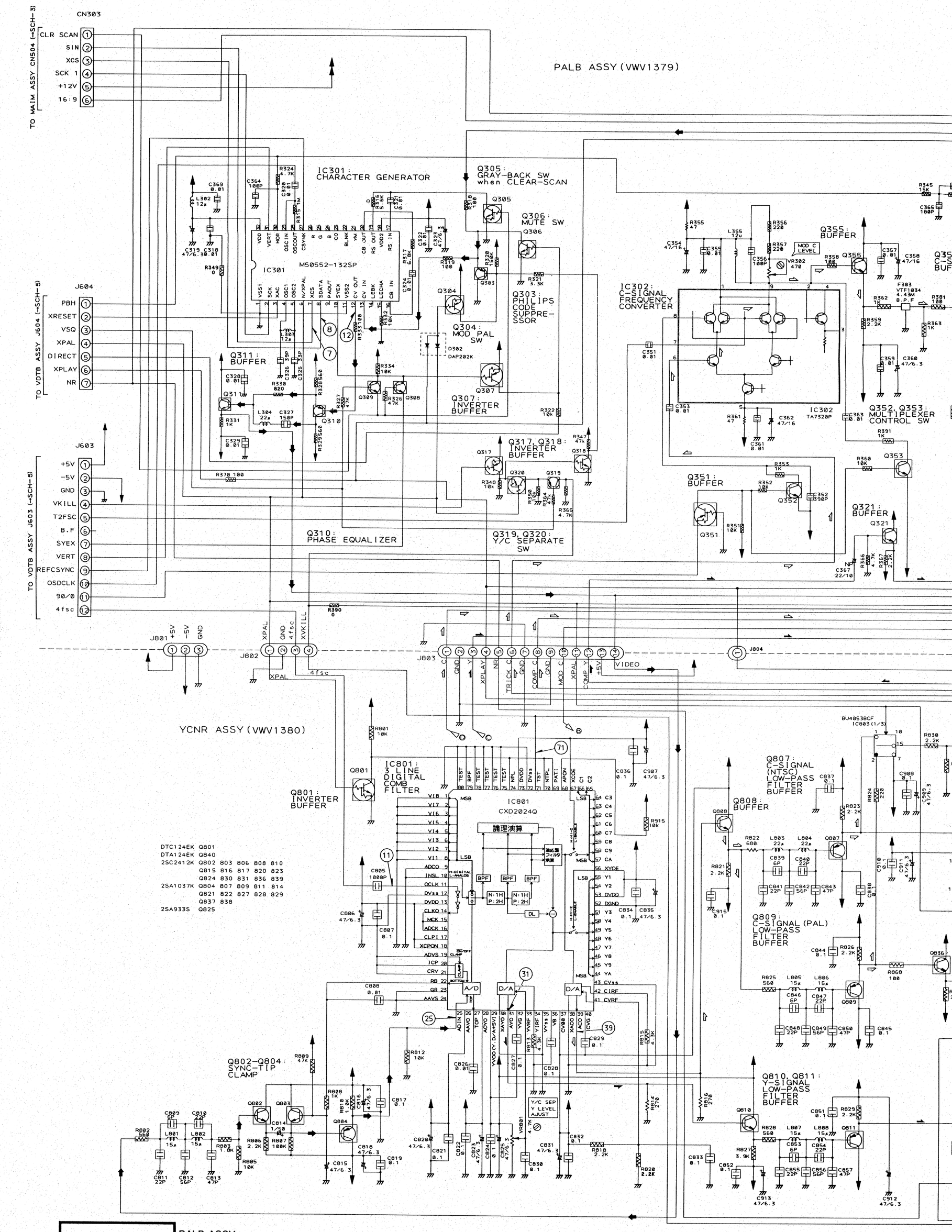

SCH-6 PALB ASSY, YCNR ASSY

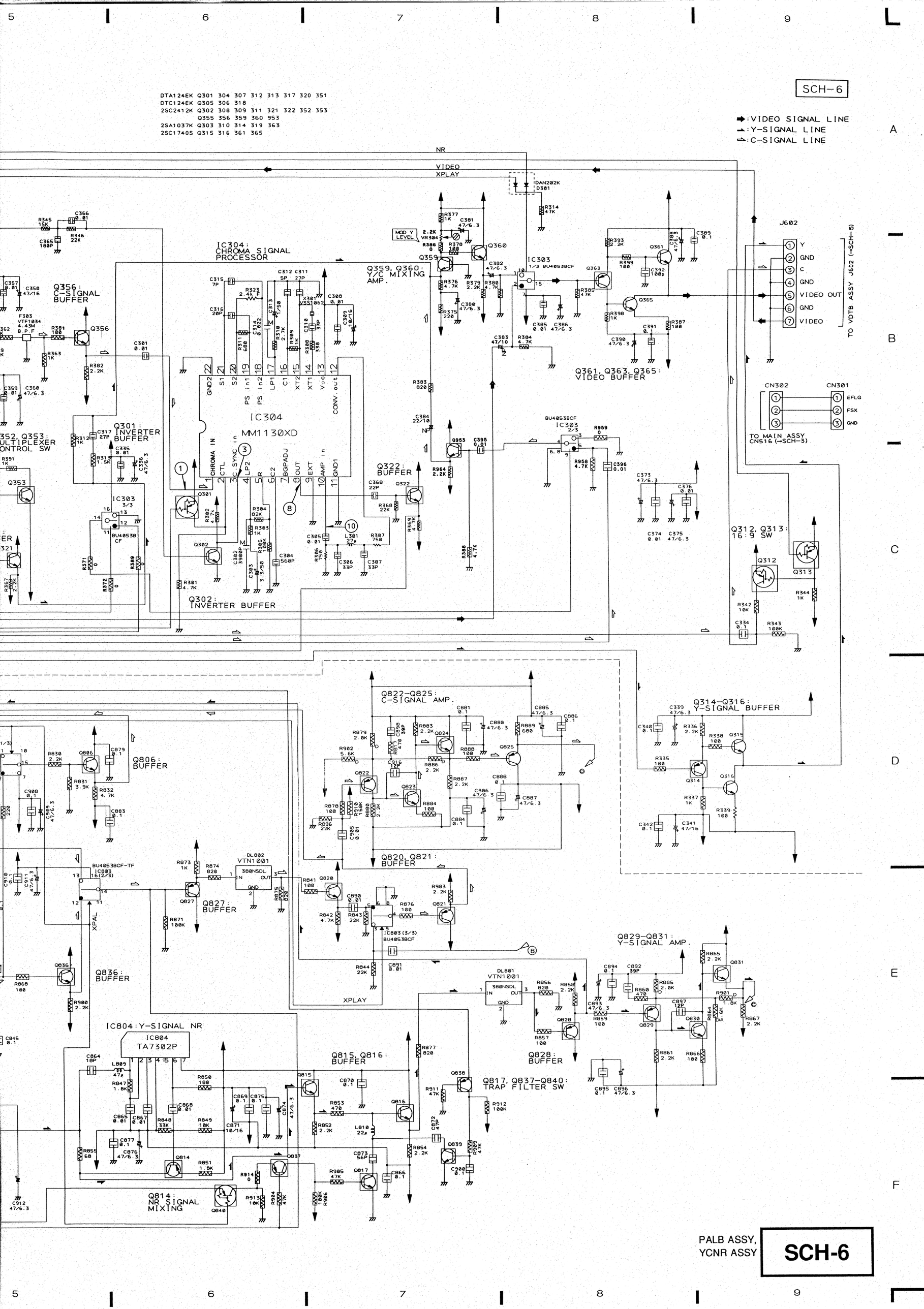

PALB ASSY, YCNR ASSY

SCH-6

PALB AND YCNR ASSEMBLIES

Note: (No.) in the table correspond to the pin number.

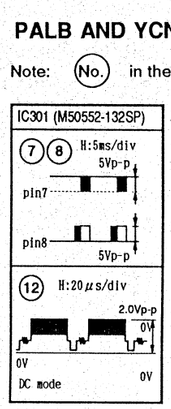

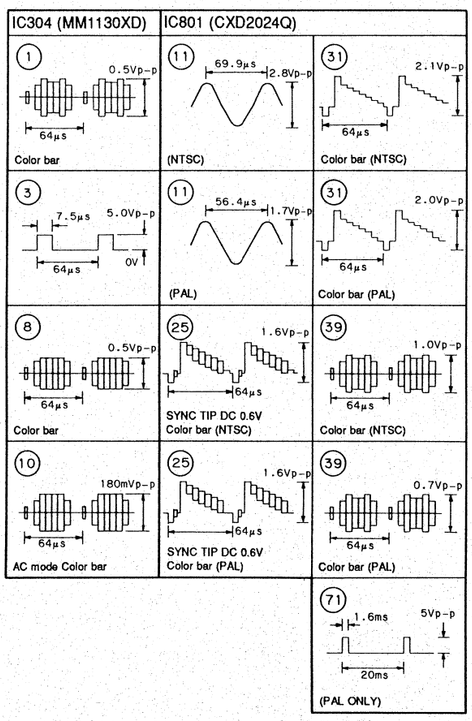

[PALB ASSY]

Note : These waveforms and voltage are in the play mode.

● IC301 (M50552-132SP)

Pin No.	Voltage (V)	Pin No.	Voltage (V)	Pin No.	Voltage (V)	Pin No.	Voltage (V)
1	0	9	–	17	0.8	25	–
2	5	10	5	18	–	26	–
3	5	11	0	19	0	27	–
4	2.4	12	1.1	20	0	28	2.3
5	2.4	13	1.1	21	–	29	2.3
6	–	14	–	22	–	30	–
7	5	15	1.8	23	–	31	–
8	0.4	16	0.6	24	–	32	–

[PALB ASSY]

Note: These waveforms and voltage are in the play mode.

● IC304 (MM1130XD)

Pin No.	Voltage [V]	Pin No.	Voltage [V]	Pin No.	Voltage [V]	Pin No.	Voltage [V]
1	3.2	7	1.8	13	5.0	19	3.3
2	—	8	2.9	14	3.0	20	3.3
3	—	9	0	15	3.7	21	3.3
4	2.0	10	2.6	16	3.7	22	0
5	2.1	11	0	17	2.6		
6	1.9	12	2.6	18	3.3		

[YCNR ASSY]

Note: These waveforms and voltage are in the play mode.

● IC801 (CXD2024Q)

Pin No.	Voltage [V]	Pin No.	Voltage [V]	Pin No.	Voltage [V]	Pin No.	Voltage [V]
1	0	21	0	41	2.6	61	0
2	0	22	0.5	42	2.6	62	0
3	0	23	0	43	0	63	0
4	0	24	0	44	0	64	0
5	0	25	—	45	0	65	0
6	0	26	5	46	0	66	0
7	0	27	2.6	47	0	67	5
8	0	28	5	48	0	68	5
9	0	29	5	49	0	69	—
10	0	30	0	50	0	70	—
11	2.3	31	—	51	0	71	—
12	0	32	3.4	52	0	72	0
13	5	33	2.6	53	5	73	5
14	2.4	34	2.6	54	0	74	—
15	2.4	35	0	55	0	75	0
16	2.5	36	1.1	56	5	76	0
17	5	37	5	57	0	77	0
18	5	38	0	58	0	78	0
19	0	39	1.3	59	0	79	0
20	0	40	3.4	60	0	80	0

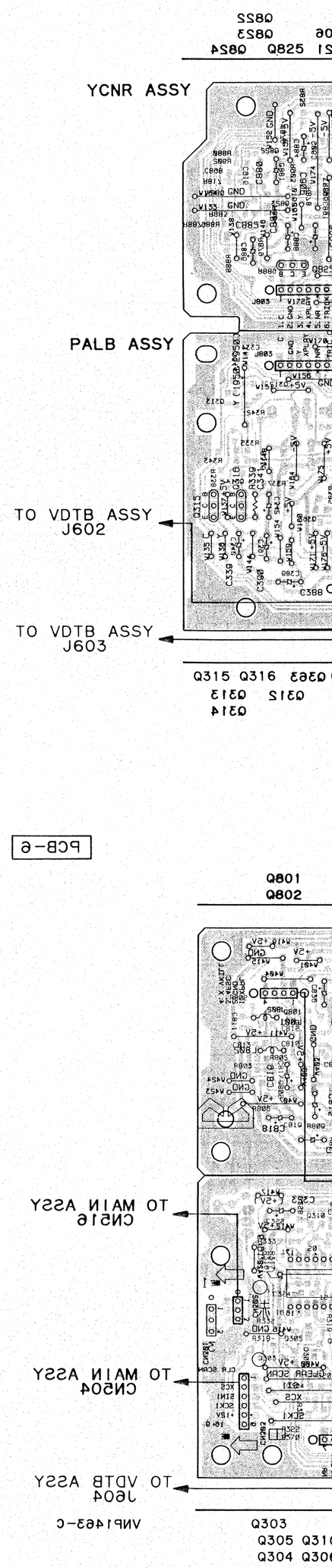

● This diagram is viewed from the mounted parts side.

PCB-6

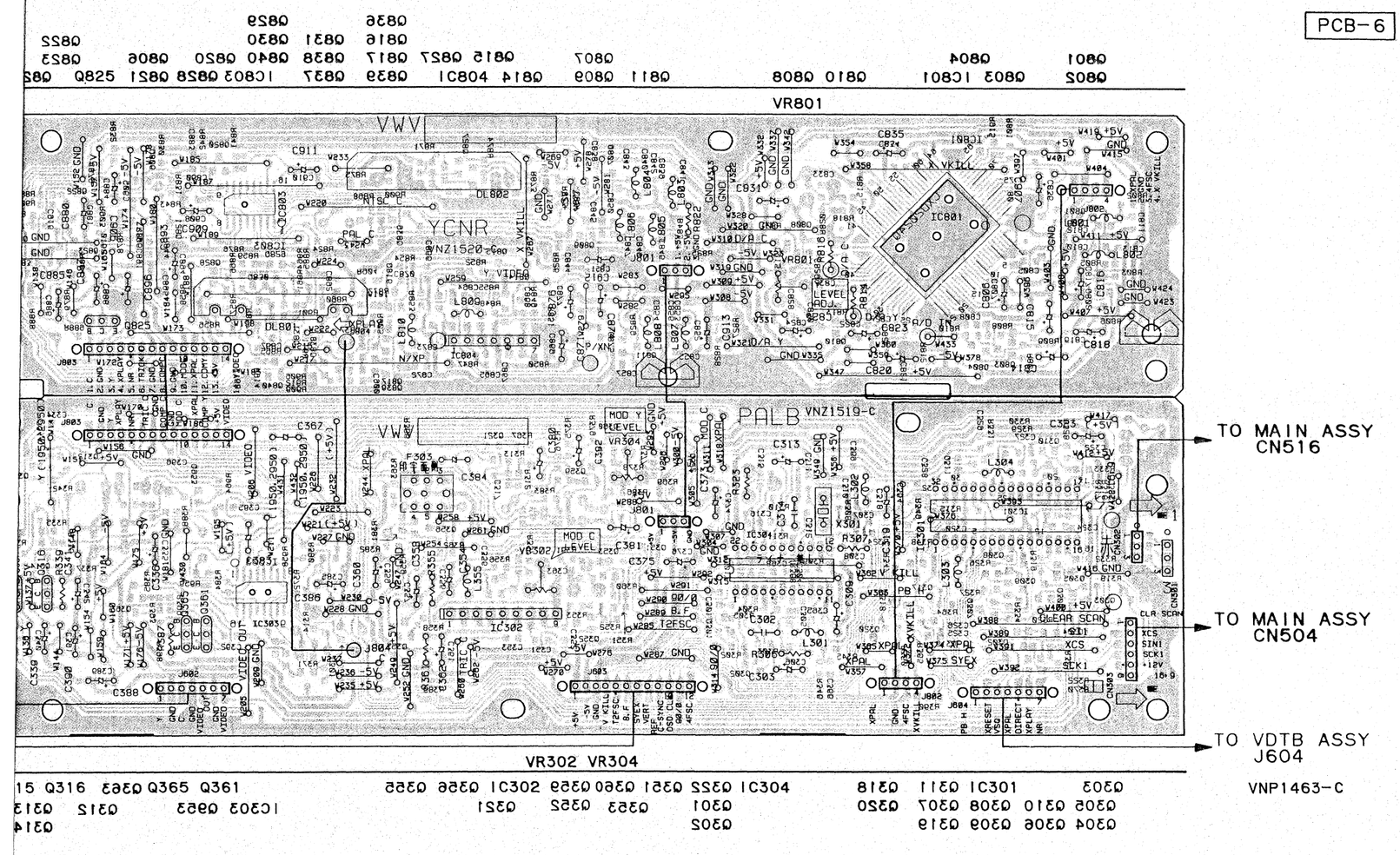

● This diagram is viewed from the foil side.

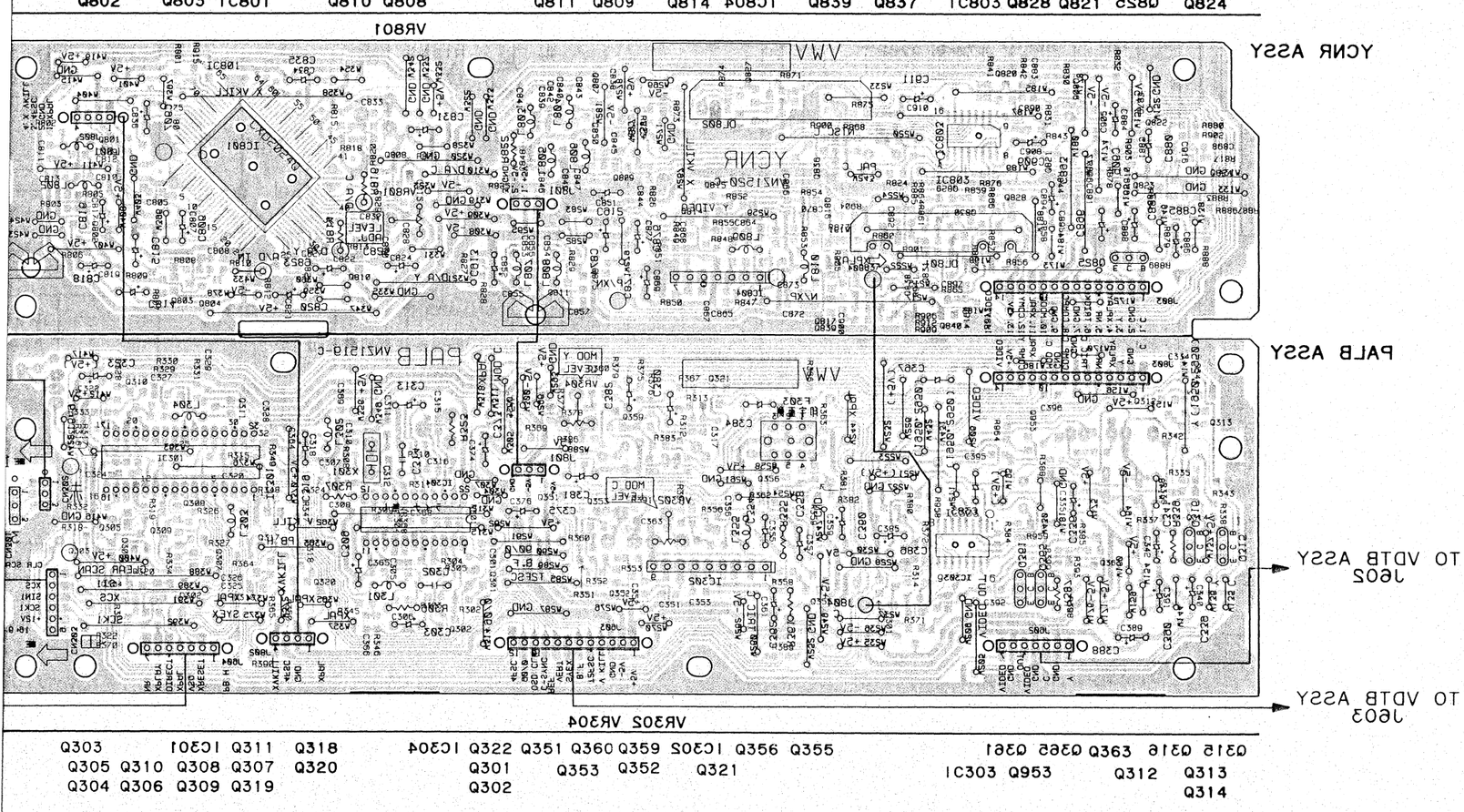

2.2.7 SCRB ASSEMBLY

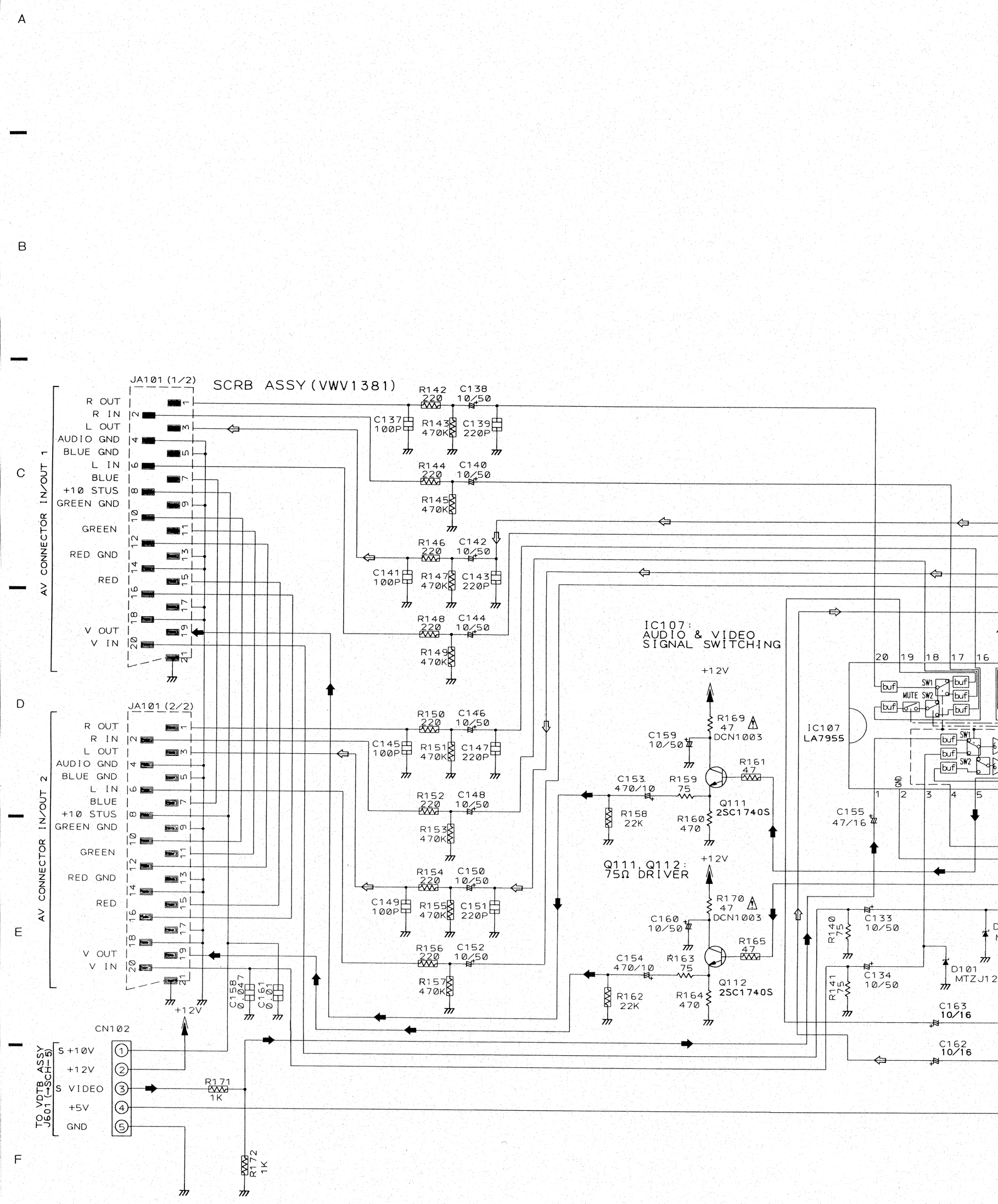

SCH-7 SCRB ASSY

SCH-7

➡: VIDEO SIGNAL LINE
⇨: AUDIO SIGNAL LINE

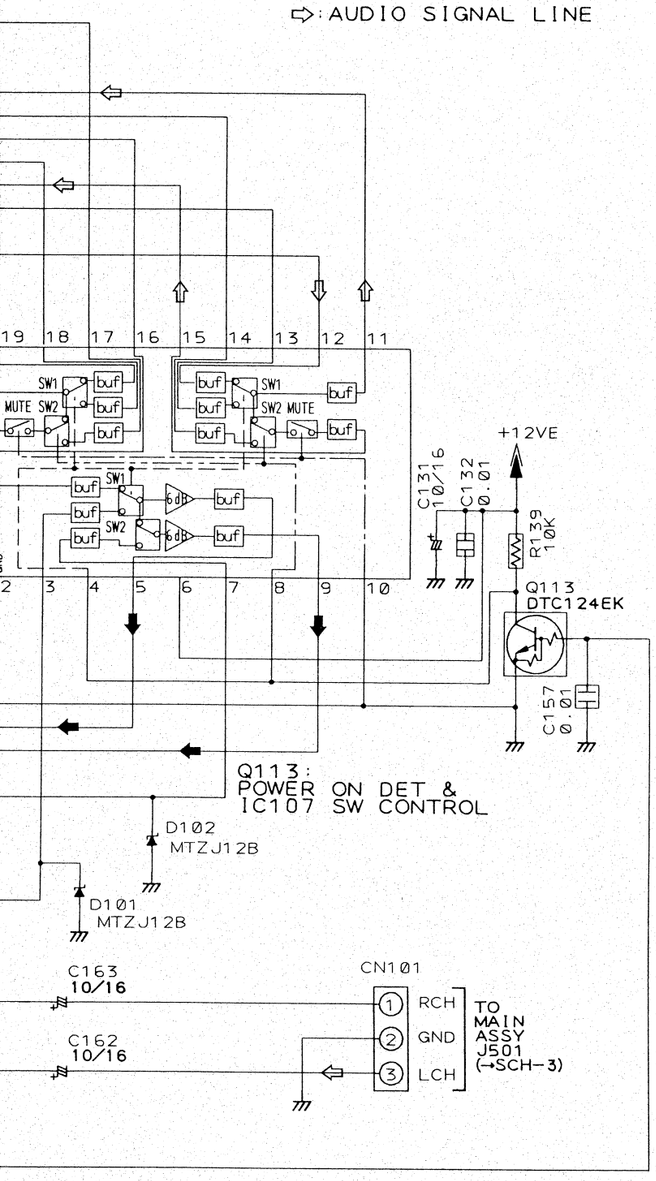

● This diagram is viewed from the mounted parts side.

PCB-7

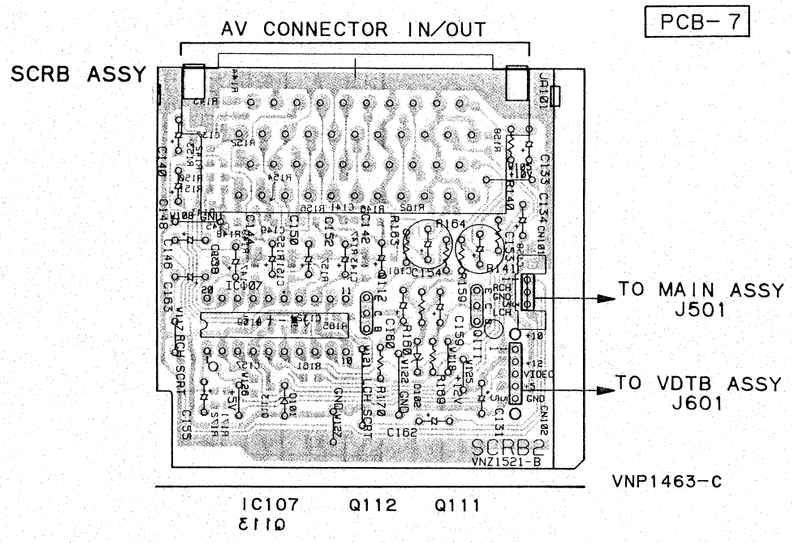

● This diagram is viewed from the foil side.

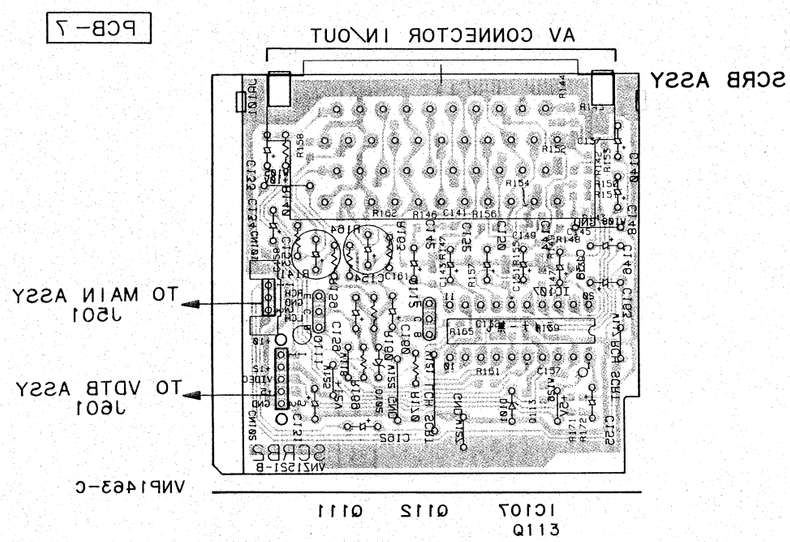

SCRB ASSY **SCH-7**