SDP-EP9ES

SERVICE MANUAL

US Model
Canadian Model
AEP Model
E Model
Chinese Model

Photo : GOLD

This processor incorporates the Dolby Pro Logic Surround system.
Manufactured under license from Dolby Laboratories Licensing Corporation.
"Dolby ," the double-D symbol ▯▯, "AC-3" and "Pro Logic" are trademarks of Dolby Laboratories Licensing Corporation.

SPECIFICATIONS

Digital inputs	Optical: 3 Coaxial: 1 AC-3 RF: 1
Digital outputs	Optical: 1
Bypass inputs	FRONT (L R), REAR (L R), CENTER, WOOFER
Analog outputs	FRONT (L R), REAR (L R), CENTER, WOOFER: Output level: 1V Output impedance: 1 kilohms
BASS BOOST	+5 dB at 60 Hz
Power requirements	U.S.A. and Canada 120 V AC, 50/60 Hz AEP 220 – 230V AC, 50/60Hz Other countries 110 - 120 V/220 - 230 V AC, 50/60 Hz
Power consumption	50 W
Dimensions	430 x 98 x 355.5 mm (17 x 3 7/8 x 14 in)
Mass (Approx.)	6.5 kg (14 lb 5 oz)
Supplied accessories	• Remote commander (remote) (1) • Size AA (R6) batteries (2) • Connecting cords (3)

Design and specifications are subject to change without notice.

DIGITAL SURROUND PROCESSOR

MICROFILM

SONY®

MODEL IDENTIFICATION
— BACK PANEL —

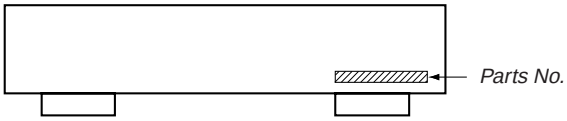

MODEL	PARTS No.
US model	4-987-861-1□
CND model	4-987-861-2□
AEP model	4-987-861-3□
E, MY, SP, CH model	4-987-861-4□

- Abbreviation
  CND : Canadian model.
  MY : Malaysia model.
  SP : Singapore model.
  CH : Chinese model.

Notes on chip component replacement
- Never reuse a disconnected chip component.
- Notice that the minus side of a tantalum capacitor may be damaged by heat.

TABLE OF CONTENTS

SAFETY-RELATED COMPONENT WARNING !!

COMPONENTS IDENTIFIED BY MARK ⚠ OR DOTTED LINE WITH MARK ⚠ ON THE SCHEMATIC DIAGRAMS AND IN THE PARTS LIST ARE CRITICAL TO SAFE OPERATION. REPLACE THESE COMPONENTS WITH SONY PARTS WHOSE PART NUMBERS APPEAR AS SHOWN IN THIS MANUAL OR IN SUPPLEMENTS PUBLISHED BY SONY.

ATTENTION AU COMPOSANT AYANT RAPPORT À LA SÉCURITÉ!!

LES COMPOSANTS IDENTIFIÉS PAR UNE MARQUE ⚠ SUR LES DIAGRAMMES SCHÉMATIQUES ET LA LISTE DES PIÈCES SONT CRITIQUES POUR LA SÉCURITÉ DE FONCTIONNEMENT. NE REMPLACER CES COMPOSANTS QUE PAR DES PIÈCES SONY DONT LES NUMÉROS SONT DONNÉS DANS CE MANUEL OU DANS LES SUPPLÉMENTS PUBLIÉS PAR SONY.

SECTION 1
SERVICING NOTE

SAFETY CHECK-OUT

After correcting the original service problem, perform the following safety checks before releasing the set to the customer:
Check the antenna terminals, metal trim, “metallized” knobs, screws, and all other exposed metal parts for AC leakage. Check leakage as described below.

LEAKAGE

The AC leakage from any exposed metal part to earth Ground and from all exposed metal parts to any exposed metal part having a return to chassis, must not exceed 0.5 mA (500 microampers). Leakage current can be measured by any one of three methods.

1. A commercial leakage tester, such as the Simpson 229 or RCA WT-540A. Follow the manufacturers’ instructions to use these instruments.
2. A battery-operated AC milliammeter. The Data Precision 245 digital multimeter is suitable for this job.
3. Measuring the voltage drop across a resistor by means of a VOM or battery-operated AC voltmeter. The “limit” indication is 0.75 V, so analog meters must have an accurate low-voltage scale. The Simpson 250 and Sanwa SH-63Trd are examples of a passive VOM that is suitable. Nearly all battery operated digital multimeters that have a 2V AC range are suitable. (See Fig. A)

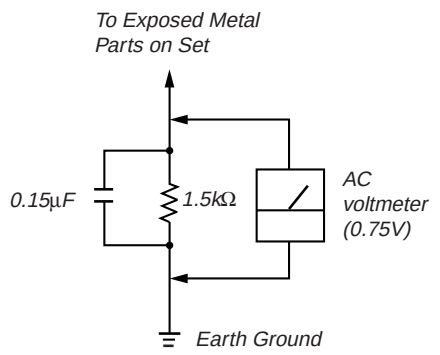

Fig. A. Using an AC voltmeter to check AC leakage.

RV901 of Main Board

RV901 of the main board requires no adjustments. Please note that it should be dixed to mechanical center position when you moved and do not know origin position.

Connection and Test Disc

Connection of this unit to a AC-3 Dolby surround equipment will realize outstanding sound playback.
Check if the respective surround channel outputs are playing back normally by the following method.

Jig :

Discription	Part No.
AC-3 TEST LD	J-2501-132-A

Connected Equipment:

AC-3 LD player
(This unit is also compatible with the digital versatile disc player (DVD). The DVD must be checked with the LD player using all the circuits of this unit.)

Connecting Method:

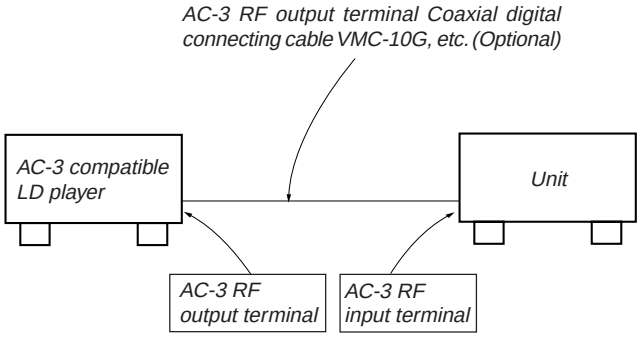

Checking Method:

Play back a test disc of the LD player, and check if the contents recorded on the disc case (printed on the disc case) are played back normally.

This section is extracted from instruction manual.

Front Panel Descriptions

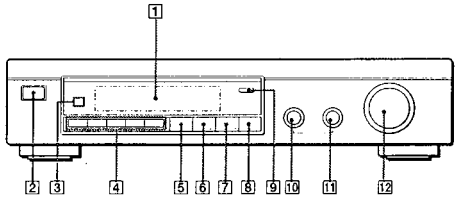

1 Display
2 POWER
3 Remote sensor (center)
4 INPUT selectors
5 BASS BOOST
6 DOLBY SURR
7 MODE
8 OFF
9 SET UP
10 MENU
11 +/–
12 MASTER VOLUME

Rear Panel Descriptions

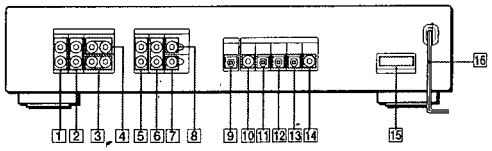

1 FRONT L (left) and R (right) OUTPUT
2 REAR L (left) and R (right) OUTPUT
3 WOOFER OUTPUT(s)
4 CENTER OUTPUT(s)
5 FRONT L (left) and R (right) BYPASS INPUT
6 REAR L (left) and R (right) BYPASS INPUT
7 WOOFER BYPASS INPUT
8 CENTER BYPASS INPUT
9 DIGITAL OUTPUT (optical)
10 DIGITAL INPUT 4 (coaxial)
11 DIGITAL INPUT 3 (optical)
12 DIGITAL INPUT 2 (optical)
13 DIGITAL INPUT 1 (optical)
14 AC-3 RF INPUT
15 VOLTAGE SELECTOR (certain models only)
16 AC power cord

Connecting an amplifier with 5.1 ch inputs (such as the Sony TA-VA8ES, etc.)

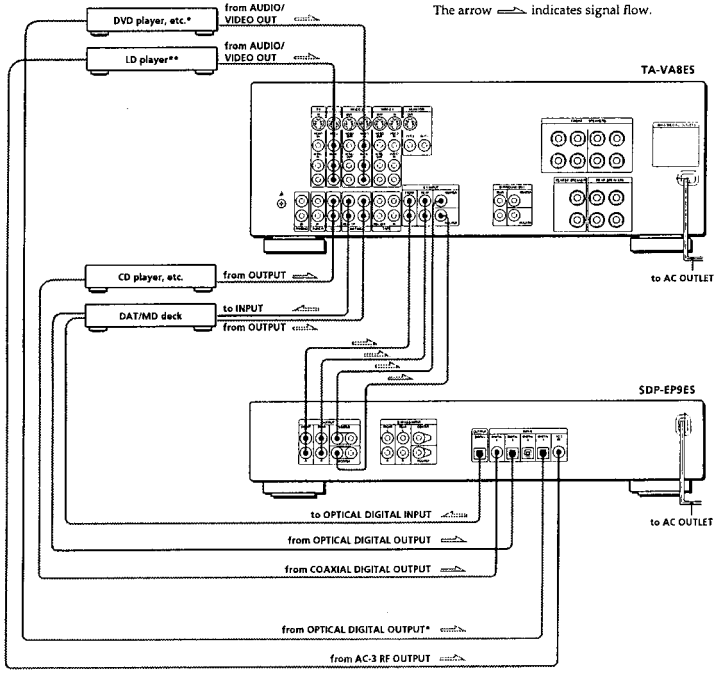

Notes on connection

- Do not connect the power cord to an AC outlet or press the POWER switch before completing all connections.
- The cable connectors should be fully inserted into the jacks. Loose connection may cause hum and noise.
- Jacks and plugs of the connecting cords are color-coded as follows:
  Yellow jacks and plugs: Video signal
  Red jacks and plugs: Right audio channel
  White jacks and plugs: Left audio channel
  You can use either red or white cables to connect the center speaker and sub woofer.

* If your DVD player has a COAXIAL DIGITAL OUTPUT, we recommend connecting the DVD player's COAXIAL DIGITAL INPUT to the this unit's DIGITAL INPUT 4 (COAXIAL IN) instead of making the optical connection shown above.

** If your LD player has an optical digital output, connect it to one of the DIGITAL INPUT 1~3 jacks on this unit. This connection can be used together with the AC-3 RF connection.

(continued)

If you have an additional surround amplifier with pre out terminals (such as the Sony TA-E2000ESD).
You can connect it to this unit's BYPASS INPUT jacks. The signals from the connected amplifier will be output without alteration from this unit's OUTPUT jacks when you select BYPASS (see page 11 for details).

If you have an additional center speaker or active sub woofer
Connect the other CENTER OUTPUT terminal to the input on the amplifier for your other center speaker. Connect the other WOOFER OUTPUT terminal to the input terminal on the active woofer.

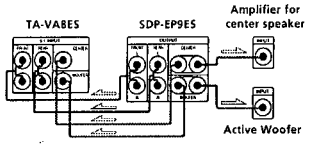

Connecting digital components

You can connect the digital output jacks of a DVD player, DAT/MD deck, CD player (etc.) to the surround processor's digital input jacks (DIGITAL INPUT 1~4).
You can also connect the AC-3 RF output terminal of an LD player to the surround processor's AC-3 RF INPUT terminal.
You can connect the surround processor's digital output jack (DIGITAL OUTPUT) to a DAT/MD deck.

What cords will I need?
- Optical digital connecting cord (not supplied)

- Coaxial digital connecting cord (not supplied)

Hookups

The arrow ⟶ indicates signal flow.

DVD player
Be sure to connect the DVD player's digital output to one of the surround processor's DIGITAL INPUT 1~4 jacks.

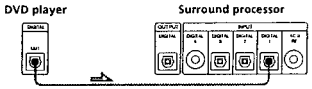

If your DVD player has a COAXIAL DIGITAL OUTPUT, we recommend connecting the DVD player's COAXIAL DIGITAL INPUT to the this unit's DIGITAL INPUT 4 (COAXIAL IN) instead of making the optical connection shown above.

LD player
Be sure to connect the LD player's AC-3 RF output to the surround processor's AC-3 RF INPUT jacks.

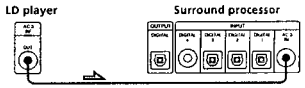

If your LD player has an optical digital output, connect it to one of the DIGITAL INPUT 1~3 jacks on this unit.
This connection can be used together with the AC-3 RF connection.

CD player

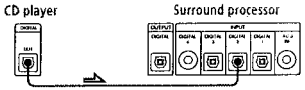

DAT/MD deck

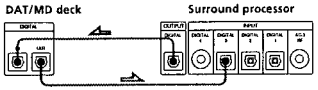

Note
This unit is only compatible with digital components using 32 kHz/44.1 kHz/48 kHz sampling frequencies. It is not compatible with 96 kHz.

Speaker Placement

For the best possible surround sound all speakers should be the same distance from the listening position (A).
(However, this unit lets you to place the center speaker up to 1.5 meters closer (B) and the rear speakers up to 4.5 meters closer (C) to the listening position.
The front speakers can be placed from 1.0 to 12.0 meters from the listening position (A).)

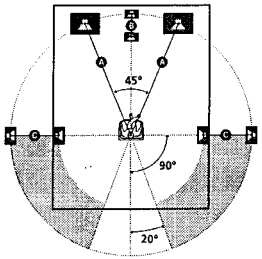

Notes
- Do not place the center or rear speakers farther away from the listening position than the front speakers.
- When mounting the rear speakers on side walls perpendicular to the listening position they should be placed 60 - 90 cm above the listening position.

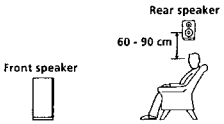

Depending on the shape of your room (etc.), you may wish to place the rear speakers behind you instead of on the side walls. One advantage of this placement is that you can use a pair of large floor standing speakers matching your front speakers.

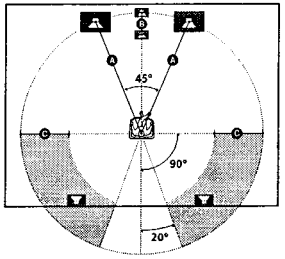

Note
If you place the rear speakers behind you, be sure to check the speaker location setting in the SP. SETUP menu when using VIRTUAL MULTI REAR and VIRTUAL REAR SHIFT sound fields (see pages 8 and 13 for details).

Before You Use Your Processor

If your processor has a voltage selector on the rear panel
Your processor operates on either 110-120 V or 220-230 V AC. Before connecting the unit to a wall outlet, be sure to set the voltage selector on the rear of the unit to the appropriate position according to your local power supply.

Before you start using your processor, make sure that you have:
- Turned MASTER VOLUME to -20 dB (near the center position).

Turn on the processor and check the following indicator.
- Press MUTING on the remote if "MUTING ON" appears in the display.
- Press BYPASS or one of the INPUT buttons if "BYPASS ON" appears in the display.
- Press SET UP to register the type of speakers you have connected and their distance from your listening position (see "Speaker Set Up" on the following page).

Speaker Set Up

To obtain the best possible surround sound, first specify the type of speakers you have connected and their distance from your listening position. Then use the test tone to adjust the speaker volumes to the same level.

Specifying the speaker type and distance

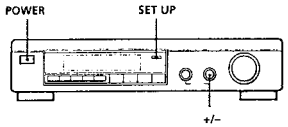

1 Press POWER on the front panel to turn on the processor.

2 Press SET UP.
"SP. SETUP" appears in the display

3 Press SET UP repeatedly to select the parameter you want to adjust.

4 Turn the +/– knob to select the setting you desire. The settings is entered automatically.

5 Repeat steps 3 and 4 until you have set all of the parameters shown below.

6 Press SET UP to exit the set up mode.

Front speaker size
Initial setting is : FRONT SP [LARGE]
- If you connect large speakers that will effectively reproduce bass frequencies, select "LARGE".
- If you connect small speakers with minimal bass response, select "SMALL" to activate the Dolby Digital (AC-3) bass redirection circuitry and output the front channel bass frequencies from the sub woofer or other "LARGE" speakers.

Center speaker size
Initial setting is : CENTER SP [LARGE]
- If you connect large speakers that will effectively reproduce bass frequencies, select "LARGE" (WIDE mode).
- If you connect small speakers with minimal bass response, select "SMALL" to activate the Dolby Digital (AC-3) bass redirection circuitry and output the center channel bass frequencies from the front speakers, sub woofer or other "LARGE" speakers (NORMAL mode).
- If you do not connect the center speaker, select "NO" (PHANTOM mode).

Rear speaker size
Initial setting is : REAR SP [LARGE]
- If you connect large speakers that will effectively reproduce bass frequencies, select "LARGE".
- If you connect small speakers with minimal bass response, select "SMALL" to activate the Dolby Digital (AC-3) bass redirection circuitry and output the rear channel bass frequencies from the sub woofer or other "LARGE" speakers.
- If you do not connect rear speakers, select "NO" (3 CH mode).

Rear speaker position
Initial setting is : REAR SP [SIDE]
This parameter lets you specify the location of your rear speakers for proper implementation of the Digital Cinema Sound VIRTUAL REAR SHIFT and VIRTUAL MULTI REAR modes. Refer to the illustration below.
- Set to SIDE if the location of your rear speakers corresponds to section A.
- Set to BEHIND if the location of your rear speakers corresponds to section B.

This setting effects only the VIRTUAL REAR SHIFT and VIRTUAL MULTI REAR modes.

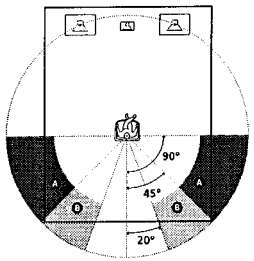

Sub woofer selection
Initial setting is : SUB WOOFER [YES]
- If you connect a sub woofer, select "YES" to output the LFE (low frequency extension) channel from the sub woofer.
- If you do not connect a sub woofer, select "NO". This activates the Dolby Digital (AC-3) bass redirection circuitry and outputs the LFE signals from other speakers.
- In order to take full advantage of the Dolby Digital (AC-3) bass redirection circuitry, we recommend setting the sub woofer's cut off frequency as high as possible. (However, when using an amplifier with 5.1 ch inputs, set the sub woofer's cut off frequency to match the characteristics of the amplifier.

Front speaker distance
Initial setting is : FRONT 5.0 meter/16 feet *
Set the distance from your listening position to the front (left or right) speaker (A on page 7).
- Front speaker distance can be set in 0.1 meter steps from 1.0 to 12.0 meters.
- If both speakers are not placed an equal distance from your listening position, set the distance to the closest speaker.

Center speaker distance
Initial setting is : CENTER 5.0 meter/16 feet *
Set the distance from your listening position to the center speaker.
- Center speaker distance can be set in 0.1 meter steps from a distance equal to the front speaker distance (A on page 7) to a distance 1.5 meters closer to your listening position (C on page 7).
- Do not place the center speaker farther away from your listening position than the front speakers.

Rear speaker distance
Initial setting is : REAR 3.5 meter/11 feet *
Set the distance from your listening position to the rear (left or right) speaker.
- Rear speaker distance can be set in 0.1 meter steps from a distance equal to the front speaker distance (A on page 7) to a distance 4.5 meters closer to your listening position (C on page 7).
- Do not place the rear speakers farther away from your listening position than the front speakers.
- If both speakers are not placed an equal distance from your listening position, set the distance to the closest speaker.

To manually adjust the bass roll off frequency for each channel.
When the front, center, or rear speaker sizes are set to small, the bass roll off frequency is automatically set to 120 Hz. To select a different roll off frequency, set the menu mode to EXPAND and use the front, center, or rear speaker roll off parameters in the speaker set up menu.
For details about the menu mode, see page 15.
For details about the roll off parameters, see page 19.

* USA and Canadian models only
You can switch the units (meter–feet) by using the distance unit parameter in the CUSTOMIZE menu. For details about the menu mode, see page 15.
For details about the distance unit parameter, see page 17.

Adjusting the speaker volume

Use the remote while seated in your listening position to adjust the volume of each speaker.

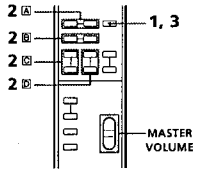

Note
This unit incorporates a new test tone with a frequency centered at 800 Hz for easier speaker volume adjustment.

1 Press TEST.
You will hear the test tone from each speaker in sequence.

2 From your listening position, use the remote to adjust the volume of each speaker so that the test tone can be heard at the same level from all speakers.
- A Press FRONT BAL L or R to adjust the balance between the front left and right speakers (±8 dB, 0.5 dB/steps).
  During this adjustment, the test tone is emitted from both speakers simultaneously.
- B Press REAR BAL L or R to adjust the balance between the rear left and right speakers (±8 dB, 0.5 dB/steps).
  During this adjustment, the test tone is emitted from both speakers simultaneously.
- C Press CENTER + or – to adjust the level of center speaker (0.5 dB/steps).
  During this adjustment, the test tone is emitted from the center speaker.
- D Press REAR + or – to adjust the level of rear speakers (0.5 dB/steps).
  During this adjustment, the test tone is emitted from both speakers simultaneously.

3 Press TEST to turn off the test tone.

(continued)

To adjust the volume of all the speakers at one time.
Use MASTER VOLUME on the processor, remote, or your multichannel processor.
When using an amplifier with 5.1 ch inputs, Set this unit's MASTER VOLUME to –20 dB (near the center position) and adjust the amplifier's volume control.

To set the test tone to a specific channel.
Set the menu mode to EXPAND and use the test tone parameter in the LEVEL ADJUST menu to select the channel you desire.
For details about the menu mode, see page 15.
For details about the test tone parameter, see page 15.

Notes
- The front balance, rear balance, center level, and rear level are shown in the display during adjustment.
- Although these adjustments can also be made with the LEVEL ADJUST menu using the knobs on the front panel, we recommend you follow the procedure described above and adjust the speaker levels from your listening position using the remote control.

Selecting a Component

To listen to or watch a connected component, first select the function on the processor or with the remote.
Before you begin, make sure you have:
- Connected all components securely and correctly as indicated on pages 4 to 7.
- Turned MASTER VOLUME to –20 dB (near the center position) (when using an amplifier with 5.1 ch inputs).
- Turned MASTER VOLUME to –∞ dB (when using separate amplifiers for each speaker).

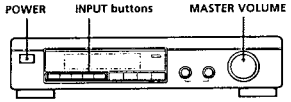

1 Press POWER to turn on the processor.

2 Press an INPUT button to select the component you want to use:

To listen to or watch	Press
An LD player connected to the AC-3 RF INPUT jack	AC-3 RF
The component connected to the DIGITAL 1, 2, or 3 optical input jack.*	DIGITAL 1, 2, or 3
The component connected to the DIGITAL 4 coaxial input jack.	DIGITAL 4
The component connected to the BYPASS input jacks.	BYPASS**

* This unit's digital inputs detect Dolby Digital (AC-3) or PCM signals automatically. (The AC-3 RF input terminal for use with LD players is for Dolby Digital (AC-3) signals only.)

** • The menu functions may not be available when the unit is set to the "BYPASS ON" mode.
• If you connected an additional audio amplifier (etc.) to the BYPASS IN jacks on the processor as described on page 6, use the function selector on that component to select the component you want to listen to ("CD" for example).
• This unit switches to the "BYPASS ON" mode while its POWER is set to off.

3 When connected to an amplifier with 5.1 ch inputs, turn on your amplifier, select the respective component, then select the 5.1 channel input.
EXAMPLE: Turn FUNCTION to select "LD", then press 5.1 INPUT (for Sony TA-VA8ES). At this time, set the MASTER VOLUME control on your amplifier to "0".

4 Turn on the source component, the LD player for example, and start playback.

5 Use the MASTER VOLUME on your amplifier to adjust the volume.

To	Do this
Mute the sound	Press MUTING on the remote. Press again to restore the sound
Reinforce the bass	Press BASS BOOST to turn on the B.BOOST indicator.
Turn off the display	Press DISPLAY on the remote.
Adjust the level of the sub woofer*	Press the SUB WOOFER +/– on the remote.

* In order to take full advantage of the Dolby Digital (AC-3) bass redirection circuitry, we recommend setting the sub woofer's cut off frequency as high as possible. (However, when using an amplifier with 5.1 ch inputs, set the sub woofer's cut off frequency to match the characteristics of the amplifier.)

Using the remote

The remote lets you operate the processor.
EXAMPLE: To listen to a Dolby Digital (AC-3) encoded Laserdisc played back in

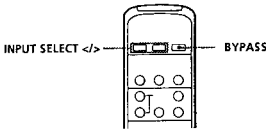

1 Press POWER on the front panel to turn on the processor.

2 Press INPUT SELECT < or > repeatedly to display the input for the component you want to use (or press BYPASS to display "BYPASS ON").
EXAMPLE: If you connected your LD player to the AC-3 RF INPUT, select "AC-3 RF".

Selecting a Surround Field

You can select a surround field according to the type of source you are playing.
When playing program sources recorded in the Dolby Digital (AC-3) format, you can enjoy surround sound simply by selecting "DOLBY SURROUND".
This unit also incorporates several pre-programmed sound modes called "Digital Cinema Sound". Select from these surround modes according to your preference to enjoy powerful surround effects from a wide variety of program sources.

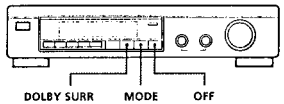

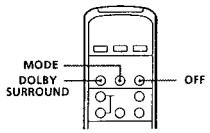

To select the Dolby Surround mode

Press DOLBY SURR(OUND).
Normally, select this mode when playing program sources recorded in the Dolby Digital (AC-3) format.

To select Digital Cinema Sound

Press MODE repeatedly until the mode you desire appears in the display.
See the chart on the following page for details regarding the types of surround modes available and the effects they provide.

When you select DOLBY SURROUND.
When the signal being input is PCM, normal 2 channel playback occurs.
When the signal being input is Dolby Digital (AC-3), the number of channels played back are determined automatically according to the characteristics of the input signal.
In the "DOLBY SURROUND" mode the number of channels being played back from the current program source appear in the display as shown below:

Display	Channels played back
STEREO PCM [xx kHz]*	Normal PCM playback
DOLBY DIGITAL [1/0]**	Center only (mono)
DOLBY DIGITAL [2/0]	Front (L, R)
DOLBY DIGITAL [2/1]	Front (L, R) + Rear (mono)
DOLBY DIGITAL [2/2]	Front (L, R) + Rear (L, R)
DOLBY DIGITAL [3/0]**	Front (L, R) + Center
DOLBY DIGITAL [3/1]	Front (L, R) + Center + Rear (mono)
DOLBY DIGITAL [3/2]	Front (L, R) + Center + Rear (L, R)
DOLBY PROLOGIC	Front (L, R) + Center + Rear (mono)

* 48 kHz, 44.1 kHz, or 32 kHz is displayed. 44.1 kHz is displayed as "44 kHz".
** The surround effect may not be readily apparent in all cases.

When playing a 2 channel Dolby Digital (AC-3) source, the unit determines either Pro Logic of stereo playback automatically according to the information provided by the program source.

You can find Dolby Surround-encoded software by looking at the packaging
Use discs with the DOLBY DIGITAL logo. In order to enjoy Dolby Digital (AC-3) playback you must use discs bearing this logo.

Digital Cinema Sound

Surround mode	Effect
NORMAL SURROUND	Decodes programs processed with Dolby Surround. Use to decode 2 ch sources using Dolby Pro Logic decoding.
ENHANCED SURROUND	Provides a greater sense of presence from Pro Logic sources with monaural rear channel sound. Produces a stereo like effect in the rear channels.
LARGE THEATER	Use Reproduce the acoustics of a standard movie theater.
CINEMA STUDIO A	Reproduces the sound characteristics of the Sony Pictures Entertainment "Cary Grant Theater" cinema production studio.
CINEMA STUDIO B	Reproduces the sound characteristics of the Sony Pictures Entertainment "Kim Novak Theater" cinema production studio.
CINEMA STUDIO C	Reproduces the sound characteristics of the Sony Pictures Entertainment scoring stage.
VIRTUAL ENHANCED (SURROUND) A (Ill.1)	Uses 3D sound imaging to create virtual rear speakers from the sound of the front speakers without using actual rear speakers. The virtual speakers are reproduced as shown in Ill. 1.
VIRTUAL ENHANCED (SURROUND) B (Ill.2)	Uses 3D sound imaging to create virtual rear speakers from the sound of the front speakers without using actual rear speakers. The virtual speakers are reproduced as shown in Ill. 2.
VIRTUAL REAR SHIFT (Ill.3)	Uses 3D sound imaging to shift the sound of the rear speakers away from the actual speaker position. The shift position differs according to the setting of the rear speaker position (SP. SETUP).
VIRTUAL MULTI REAR (Ill.4)	Uses 3D sound imaging to create an array of virtual rear speakers from a single pair of actual rear speakers. The position of the virtual rear speakers differs according to the setting of the rear speaker position (SP. SETUP).
LARGE HALL	Reproduces the acoustics of a live house. Use when playing recordings of live concerts (etc.).
LIVE HOUSE	Create a simulated surround sound from monaural sources such as old movies or TV programs.

To turn off the surround effect (2 channel stereo playback)
Press OFF (or DIGITAL CINEMA SOUND - OFF on the remote). At this time Dolby Digital (AC-3) signals are automatically downmixed to front (L, R) signals.

Ill.1 VIRTUAL ENHANCED (SURROUND) A

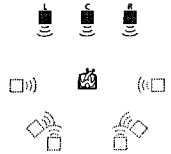

Ill.2 VIRTUAL ENHANCED (SURROUND) B

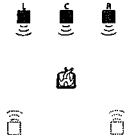

Ill.3 VIRTUAL REAR SHIFT

For REAR SP [SIDE]* | For REAR SP [BEHIND]*

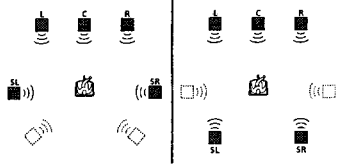

Ill.4 VIRTUAL MULTI REAR

For REAR SP [SIDE]* | For REAR SP [BEHIND]*

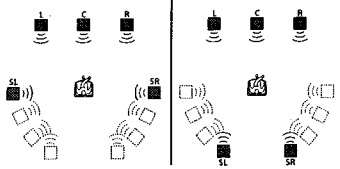

L : Front speaker (left)
R : Front speaker (right)
C : Center speaker
SL : Rear speaker (left)
SR : Rear speaker (right)
□ : Virtual speaker

* See page 8 for details on how to set the rear speaker position.

(continued)

Adjusting the Surround Effect Level (for Digital Cinema Sound modes only*)

You can adjust the surround effect level. This control lets you adjust the "presence" of the current Digital Cinema Sound mode from 0% (no digital cinema sound effects) to 100%(150%) in 5% steps.

* This adjustment is not possible in the NORMAL SURROUND or ENHANCED SURROUND mode.

1 Start playing a program source.

2 Press DIGITAL CINEMA SOUND - MODE on the remote repeatedly to select the mode you desire.

3 Press EFFECT + or – on the remote to select the level you prefer. The effect level is indicated in the display during adjustment. The level is stored automatically.

Note

Changing the effect level may not produce major variations in the surround effect when used with certain playback sources.

You can also adjust the surround effect level using the controls on the front panel.

Use the MENU and the +/– knobs to adjust the surround effect level parameter in the SURROUND menu.

See page 15 for details on menu operations and the surround effect level parameter.

Compressing the dynamic range (Dolby Digital (AC-3) only)

When inputting a Dolby Digital (AC-3) signal you can compress the dynamic range of the sound track by using the dynamic range compression parameters in the SURROUND menu. This may be useful when you want to watch movies at low volumes late at night. See page 15 for details on menu operations and page 16 for details on the dynamic range compression parameter.

Digital Recording

This processor makes it easy to make digital recordings from the components connected to the processor. You don't have to connect playback and recording components directly.

Before you begin, make sure you've connected all components properly.

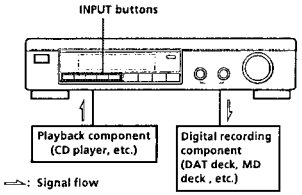

EXAMPLE: Recording a CD using a DAT deck.
See your DAT or CD player's instruction manual if you need help.

1 Press DIGITAL 1 (if a CD player is connected to the DIGITAL 1 INPUT) to select the CD player.

2 Insert a blank digital audio tape into the DAT for recording.

3 Start recording on the DAT and then start playing the CD you want to record.

Note

You cannot record the digital signal from a Dolby Digital (AC-3) program source.

Settings and Adjustments

The menu operations allow you to customize various aspects of the processor to suit your listening environment, your speakers, your components, and your personal preferences.
You can select between two menu modes (basic and expand) according to your needs.

- The basic menu mode (BASIC) lets you make general adjustments to the sound fields and adjust all speaker settings simultaneously.
- The expanded menu mode (EXPAND) lets you make precise individual adjustments to the equalization and low cut frequency of the front, center, and rear speakers, and determine the default settings for the digital inputs.

Note

If you switch from EXPAND mode to BASIC mode, the adjustments made in the EXPAND mode are retained. However, if you adjust parameters from the same menu in the BASIC mode, those settings change accordingly. For example, when you switch to the basic mode, the individual tone controls for each speaker (in the EQUALIZER menu) are preserved. However, a single adjustment to the general tone controls (in the SURROUND menu) sets all speaker equalizations to the front speaker settings.

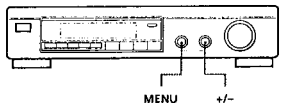

1 Push the MENU knob repeatedly to display one of the following menus:

BASIC mode	EXPAND mode
LEVEL ADJUST menu	LEVEL ADJUST menu
SURROUND menu	SURROUND menu
SP. SETUP menu	EQUALIZER menu
CUSTOMIZE menu	SP. SETUP menu
	CUSTOMIZE menu

2 Turn the MENU knob to select the parameter you desire from the respective menu.

3 Turn the +/– knob to select the setting you desire. The setting is entered automatically.

4 Repeat steps 1 through 3 to make all necessary adjustments.

When using the controls on the remote

1 Press SELECT repeatedly to display the desired menu.
2 Press MENU ∧/∨ repeatedly to select the parameter you desire from the respective menu
3 Press +/– repeatedly to select the setting you desire. The setting is entered automatically.
4 Repeat steps 1 through 3 to make all necessary adjustments.

Note

Certain menu items may not be available for adjustment depending on the current settings and menu modes. Unavailable items appear dimmed when shown in the display.

LEVEL ADJUST menu

The LEVEL ADJUST menu contains speaker level adjustment parameters that allow you to balance output level to each speaker.

Most of these settings can also be adjusted directly using remote. See "Adjusting the speaker volume" (page 9).

Test tone

Initial setting is : TEST TONE OFF
Lets you turn the test tone on and off.

- When the menu mode is set to BASIC, you can select between "OFF" and "[ ] auto". "[ ] auto" provides the same test tone activity as the described on page 8.
- When the menu mode is set to EXPAND, you can select which speaker will emit the test tone; [L]: left (front), [C]: center, [R]: right (front), [SR]: rear right, [SL]: rear left.

Front speaker balance

Initial setting is : FRONT L ----I---- R
Lets you adjust the balance between the front left and right speakers.

- The balance can be adjusted ±8.0 dB in 0.5 dB steps.

Rear speaker balance

Initial setting is : REAR L ----I---- R
Lets you adjust the balance between the rear left and right speakers.

- The balance can be adjusted ±8.0 dB in 0.5 dB steps.

Rear speaker level

Initial setting is : REAR LEVEL 0 dB
Lets you adjust level of the rear (left and right) speakers.

- The level can be adjusted in 0.5 dB steps from –20.0 dB to +10.0 dB.
- Selecting MUTE completely mutes the sound (–∞) from the rear speakers. In this case, the sound of the rear channels is not output from the front speakers, etc.

(continued)

Center speaker level

Initial setting is : CENT.LEVEL 0 dB

Lets you adjust the level of the center speaker.

- The level can be adjusted in 0.5 dB steps from –20.0 dB to +10.0 dB.
- Selecting MUTE completely mutes the sound (–∞) from the center speaker. In this case, the sound of the center channel is not output from the front speakers, etc.

Sub woofer level

Initial setting is : SUB WOOFER 0 dB

Lets you adjust the level of the sub woofer.

- The level can be adjusted in 0.5 dB steps from –20.0 dB to +10.0 dB.
- Selecting MUTE mutes the sound from the sub woofer.

SURROUND menu

The SURROUND menu contains parameters that let you customize various aspects of the current surround field. The settings available in this menu are stored separately for each surround field. The parameter types vary according to the menu mode.

Surround effect level (Digital Cinema Sound modes only)

Initial setting is : SURR.EFFECT 100%

This parameter can be adjusted directly using EFFECT +/– on the remote. It lets you adjust the "presence" of the current digital cinema sound surround effect.

- The effect level can be adjusted from 0% (no digital cinema sound effects) to 100% (150%) in 5% steps.

Low Frequency Extension (LFE) mix level (DISCRETE only)

Initial setting is : LFE MIX. 0dB

This parameter lets you attenuate the level of the LFE (Low Frequency Extension) channel output from the sub woofer without effecting the level of the bass frequencies sent to the sub woofer from the front, center or rear channels via the bass redirection circuitry.

- The level can be adjusted in 0.5 dB steps from –20.0 dB to 0 dB (line level). 0 dB outputs the full LFE signal at the mix level determined by the recording engineer.
- Selecting MUTE mutes the sound of the LFE channel from the sub woofer. However, the low frequency sounds of the front, center, or rear speakers are output from the sub woofer according to the settings made for each speaker in the speaker setup (page 8).

Dynamic range compression ratio

Initial setting is : D.RANGE COMP OFF

Lets you compress the dynamic range of the sound track. This may be useful when you want to watch movies at low volumes late at night.

- OFF reproduces the sound track with no compression.
- STD reproduces the sound track with the full dynamic range as intended by the recording engineer.
- 0.1 ~ 0.9 allow you to compress the dynamic range in small steps to achieve the sound you desire.
- MAX provides a dramatic compression of the dynamic range.

Tone Control (on/off) •Basic mode only•

Initial setting is : TONE CONTROL OFF

Lets you turn the BASS and TREBLE tone control adjustments ON or OFF. You can use this setting to compare the sound of the BASS and TREBLE adjustments with that of the original signal.

- OFF flattens the frequency characteristics of all channels simultaneously. If you adjust the bass or treble levels after setting the tone control to OFF, the sound quality changes from the flat (0 dB) position.
- ON restores the frequency characteristics to the values present before the tone control was set to OFF.

Bass level adjustment •Basic mode only•

Initial setting is : BASS 0 dB

Lets you adjust the level of the bass frequencies of the front (left and right), center, and rear (left and right) channels simultaneously. To adjust the LFE channel, see "Low Frequency Extension (LFE) mix level".

- The level can be adjusted ±10 dB in 1 dB steps.
- The "0dB" setting represents line level (0 dB).

Treble level adjustment •Basic mode only•

Initial setting is : TREBLE 0 dB

Lets you adjust the level of the treble frequencies of the front (left and right), center, and rear (left and right) channels simultaneously.

- The level can be adjusted ±10 dB in 1 dB steps.
- The "0dB" setting represents line level (0 dB).

EQUALIZER menu •Expand mode only•

[illegible]

[illegible]

[illegible]

[illegible]

[illegible]

[illegible]

[illegible]

[illegible]

[illegible]

[illegible]

[illegible]

[illegible]

[illegible]

[illegible]

[illegible]

CUSTOMIZE menu

[illegible]

[illegible]

[illegible]

[illegible]

[illegible]

[illegible]

[illegible]

(Continued)

Menu mode selection
Initial setting is : MENU MODE [BASIC]
Lets you choose between the basic or the expand menu mode:
- The basic menu mode (BASIC) lets you make general adjustments to the sound fields and adjust the tone of all the speakers simultaneously.
- The expanded menu mode (EXPAND) lets you make precise individual adjustments to the equalization and low cut frequency of the front, center, and rear speakers, and determine the default settings for the digital inputs.

Note
If you switch from EXPAND mode to BASIC mode, the adjustments made in the EXPAND mode are retained. However, if you adjust parameters from the same menu in the BASIC mode, those settings change accordingly.
For example, when you switch to the basic mode, the individual tone controls for each speaker (in the EQUALIZER menu) are preserved. However, a single adjustment to the general tone controls (in the SURROUND menu) sets all speaker equalizations to the front speaker settings.

Even if you plan on making individual adjustments using the EQUALIZER menu,
We recommend that you start by using the tone controls in the basic menu mode and then make further refinements by switching to the expand mode and using the equalizer.

Digital input trim adjustment *Expand mode only*
Initial setting is : INPUT TRIM 0dB
Different components often have a different line levels. In such cases you can adjust the line level at each of the digital inputs. Settings are stored independently for each input.

Digital input mode *Expand mode only*
Initial setting is : DECODE MODE [AUTO]
Lets you specify the type of signal to be input to the currently digital input jack (AC-3 RF or DIGITAL 1–4).
Settings are stored independently for each input.
- AUTO : This unit automatically switches between Dolby Digital (AC-3) and PCM.
- AC-3 : All input signals are treated as Dolby Digital (AC-3) signals. If a PCM signal is input to a jack set to AC-3, no sound will be heard.

SP. SETUP menu

The speaker setup menu contains parameters that allow you to set the type and size of the speakers in your system. This information is essential for production of realistic surround sound. The settings available in this menu can also be accessed by pressing SET UP (see "Speaker Set Up" on page 8 for details).

Front speaker size
Initial setting is : FRONT SP [LARGE]
See page 8.

Center speaker size
Initial setting is : CENTER SP [LARGE]
See page 8.

Rear speaker size
Initial setting is : REAR SP [LARGE]
See page 8.

Rear speaker position
Initial setting is : REAR SP [SIDE]
See page 8.

Sub woofer selection
Initial setting is : SUB WOOFER [YES]
See page 8.

Front speaker distance
Initial setting is : FRONT 5.0 meter/16 feet *
See page 8.

Center speaker distance
Initial setting is : CENTER 5.0 meter/16 feet *
See page 8.

Rear speaker distance
Initial setting is : REAR 3.5 meter/11 feet *
See page 8.

* USA and Canadian models only
You can switch the units (meter/feet) by using the distance unit parameter in the CUSTOMIZE menu. For details about the menu mode, see page 15.
For details about the distance unit parameter, see page 17.

Front speaker roll off frequency *Expand mode only*
Initial setting is : FRONT SP > 120 Hz
This setting lets you select the roll off frequency for the low cut filter of the front (left and right) speakers.
- The bass frequencies lower than the cut off frequency are divided by the Dolby Digital (AC-3) bass redirection circuitry and output from the sub woofer or other "LARGE" speakers. In order to prevent clipping, frequencies below the cut off frequency are not output from the front speakers.

Center speaker roll off frequency *Expand mode only*
Initial setting is : CENTER SP > 120 Hz
This setting lets you select the roll off frequency for the low cut filter of the center speaker.
- The bass frequencies lower than the cut off frequency are divided by the Dolby Digital (AC-3) bass redirection circuitry and output from the sub woofer or other "LARGE" speakers. In order to prevent clipping, frequencies below the cut off frequency are not output from the center speaker.

Rear speaker roll off frequency *Expand mode only*
Initial setting is : REAR SP > 120 Hz
This setting lets you select the roll off frequency for the low cut filter of the rear (left and right) speakers.
- The bass frequencies lower than the cut off frequency are divided by the Dolby Digital (AC-3) bass redirection circuitry and output from the sub woofer or other "LARGE" speakers. In order to prevent clipping, frequencies below the cut off frequency are not output from the rear speakers.

SECTION 3
TEST MODE

Self-Diagnosis and Test Mode

This unit is provided with a “self-diagnosis and self-recovery function” which detects DSP errors and automatically recovers the unit, and a test mode for performing operation checks during repairs.

1. Main Functions

- DSP self-diagnosis and self-recovery function
- Self-diagnosis for servicing and error message display
- Display of history of past DSP errors
- Various operation check mode
- SRAM, EEPROM check function
- Initialization (Differs according to country)

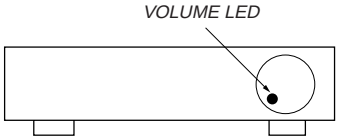

2. Entering the Test Mode

1. While pressing the AC-3 RF button and DIGITAL 2 button simultaneously in the power OFF state, press the POWER button.
2. When the VOLUME LED starts blinking, release these buttons. The self-diagnosis for servicing will be executed, and the operation check mode will be set.
   (**NOTE:** Performing initialization will erase the error history. Do not therefore press the wrong buttons. For details, refer to “5. Initialization” on page 14.)

3. Self-diagnosis Mode for Servicing/Display of History of DSP Errors

3-1. Self-diagnosis Mode for Servicing

Before entering the test mode, first the following self-diagnosis program for servicing will be run.

1. Checks if unintended buttons are being pressed
2. Checks EEPROM (External memory device) operation
3. Read/write test of DSP external memory (1M SRAM)
4. Checks and displays history of various DSP abnormal operations

- **When an error is detected:**
  The error message is displayed for about 8 seconds on the fluorescent display tube, it is switched to “DOLBY SURROUND”, and the operation check mode is set. (See Table 1.)
  When several errors occur at the same time, only the first error detected will be displayed.

- **When no error is detected:**
  “software version X. XX” will be displayed, and the operation check mode will be set. (X. XX means its version No.)

Table-1:

Error Message/Fluorescent Display Tube	Possible Reasons
VOLUME LED blinks and fluorescent display tube is OFF*	An unintended button is pressed, or connection fault of flexible board between MAIN board and DISPLAY board.
EEPROM read error!	Soldering fault or malfunction between IC202 (MAIN board AT24C02) and IC201 (MAIN board microprocessor).
EEPROM write error!	Reached end of IC202 (MAIN board AT24C02) writing life or incorrect insertion of part.
S-RAM access error!	Soldering fault between IC422 (MAIN part 1M SRAM) and IC423 (MAIN board SSP424023)
DSP error detected!	When a DSP error is detected (Refer to “3-2. Display of History of Abnormal DSP Operations”.)

***NOTE:**
Refer to “6. Check of Pressing of Unintended Button” on page 14.

3-2. Display of History of DSP Operations

- When “DSP error detected!” is displayed on the fluorescent display tube, the history of DSP errors will be displayed eight seconds later. (See Fig. 1.)
- This history will be displayed if a DSP error has occurred in the past. It helps the detection of malfunction parts by enabling past problems of the unit to be checked.
- This history shows the “Cause of error” and “How many times occurred” for the two DSPs. (See Fig. 1.)

Fig. 1

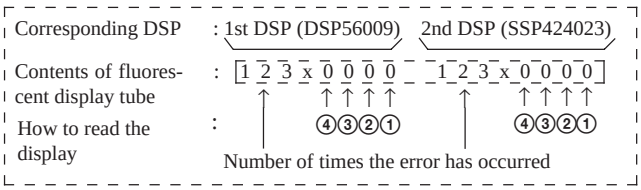

How to read the display

- The left side shows the errors of the first DSP (DSP56009:MAIN board IC424) and the right side shows the errors of the second DSP (SSP424023:MAIN board IC423).
- The “How many times occurred” indicates the number of times that the error has occurred. If an error has occurred more than 256 times, it will be displayed as 256.
- The ① ② ③ ④ part shows 0 or 1 according to the cause of the error. If an error has occurred, 1 will be displayed. If no error has occurred, 0 will be displayed. (See Table-2.)

Table-2:

Cause of error	Possible cause
① Failed in initial booting	Mostly due to faulty connection (soldering) between DSP and microprocessor
② DSP does not operate	Faulty DSP clock (X401 and onwards), faulty DSP part, etc.
③ Communication port malfunction	Overrunning of DSP due to heat, microprocessor bugging, or IC301 (MAIN board PLL) is faulty
④ No reply from DSP	Faulty DSP part, or faulty microprocessor part, etc.

NOTE: This history is memorized in the EEPROM until the unit is initialized. (Refer to “5. Initialization” on page 14.)

4. Operation Check Mode

- During the operation check mode, functions can be set by pressing the corresponding button. (See Table-3.)
- Each time a button is pressed, the corresponding function will be displayed for about 8 seconds.
- Buttons other than those displayed in Table-3 operate usually.

NOTE: Do not press the SET UP button during the operation check mode. As this button is provided with a special function for debugging, pressing it may impede the normal output of signals in the sub-woofer mode.

Table-3:

Button	Fluorescent Display Tube Display	Function
DIGITAL2	DIG-2 (L-SL, R-SR)	Outputs the Lch DIGITAL-2 input signal to the REAR Lch and the Rch to the REAR Rch.
DIGITAL3	DIG-3 (L-C, R-SW)	Outputs the Lch DIGITAL-3 input signal to the CENTER and the Rch only to the WOOFER.
DIGITAL4	DIG-4 (L, R-ALL)	Outputs the Lch DIGITAL-4 input signal to the FRONT Lch, REAR Lch, CENTER, and the Rch to the FRONT Rch, REAR Rch, and CENTER.
OFF	Whole fluorescent display tube lit check Each time the button is pressed, the fluorescent display tube lights up as follows. Lit totally→Lit partially 1→Lit partially 2→Lit totally....	

By pressing the MENU knob and displaying “<<< LEVEL ADJUST >>>”, and rotating the +/– knob to the right, the input signal selected at that time can be output to any Lch or Rch channel.
(See Table-4.)

Table-4:

Fluorescent Display Tube Display	Output Destination of Input Signal
Exchange (L-SL, R=SR)	Outputs the FRONT Lch/Rch signal only to the REAR Lch/Rch.
Exchange (L-C, R=SW)	Outputs the FRONT Lch signal only to the REAR Lch, and FRONT Rch signal to the REAR Rch.
Exchange (NORMAL)	Outputs the FRONT Lch/Rch signal to the FRONT Lch/Rch, the REAR Lch/Rch signal to the REAR Lch/Rch, the CENTER signal to CENTER, and the WOOFER signal to WOOFER as usual.
Exchange (L, R-ALL)	Outputs the FRONT Lch signal to the FRONT Lch, REAR Lch, and CENTER, and the FRONT Rch signal to the FRONT Rch, the REAR Rch, WOOFER.

5. Initialization (Differs according to destination)

After executing the test mode, be sure to perform initialization.

- **AEP, E, MY, SP, CH models**
  While pressing the AC-3 RF button and DIGITAL3 buttons simultaneously, press the POWER button. When the VOLUME LED starts blinking, release the buttons. “initialized (J/SP/CE)” will be displayed on the fluorescent display tube, and all internal settings will be returned to the initial values.

- **US, CND models**
  While pressing the AC-3 RF button and DIGITAL4 buttons simultaneously, press the POWER button. When the VOLUME LED starts blinking, release the buttons. “initialized (U/CA)” will be displayed on the fluorescent display tube, and all internal settings will be returned to the initial values.

NOTE: As all histories of abnormal DSP operations will be erased, note down the contents of the history beforehand.

6. Check of Pressing of Unintended Button

- This check is always performed when the power is turned ON. Therefore when an error occurs, it can be known without setting the test mode because the VOLUME LED blinks and the fluorescent display tube stops displaying.
- When an unintended button is pressed during the test mode or initialization, the VOLUME LED also blinks, and the fluorescent display tube stops displaying, preventing no mode to be set.

7. Other Functions

In the personal use of the unit at home, if no sounds are produced due to DSP problems, the DSP will be rebooted automatically to attempt recovery. If no sounds are still produced after five retries, “Turn POWER SW off!” will be displayed on the fluorescent display tube. If this problem occurs, it indicates that the DSP is faulty or the user’s setting environment may be unsuitable. Refer to “3. Self-Diagnosis Mode for Servicing/Display of History of DSP Errors” on page 12 to identify the problems.

- **Abbreviation**
  CND : Canadian model
  MY : Malaysia model
  SP : Singapore model
  CH : Chinese model

SECTION 4
ELECTRICAL ADJUSTMENTS

PLL Free-running Adjustment

Connection :

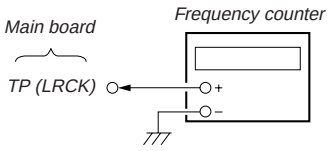

Adjusting Method :
1. Connect the frequency counter to TP (LRCK).
2. Turn On the power switch.
3. Adjust RV301 of the main board so that the frequency of TP (LRCK) becomes the specified value.

Specified value: 44.5 kHz ± 0.5 kHz
Adjusting point: Main Board

RV901 of Main Board

RV901 of the main board requires no adjustments. Please note that it should be dixed to mechanical center position when you moved and do not know origin position.

Adjustment Location :

[MAIN BOARD] — SIDE A —

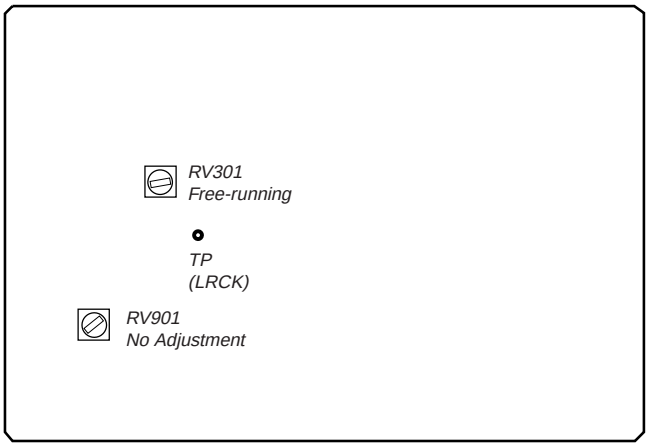

SECTION 5
DIAGRAMS

5-1. CIRCUIT BOARDS LOCATION

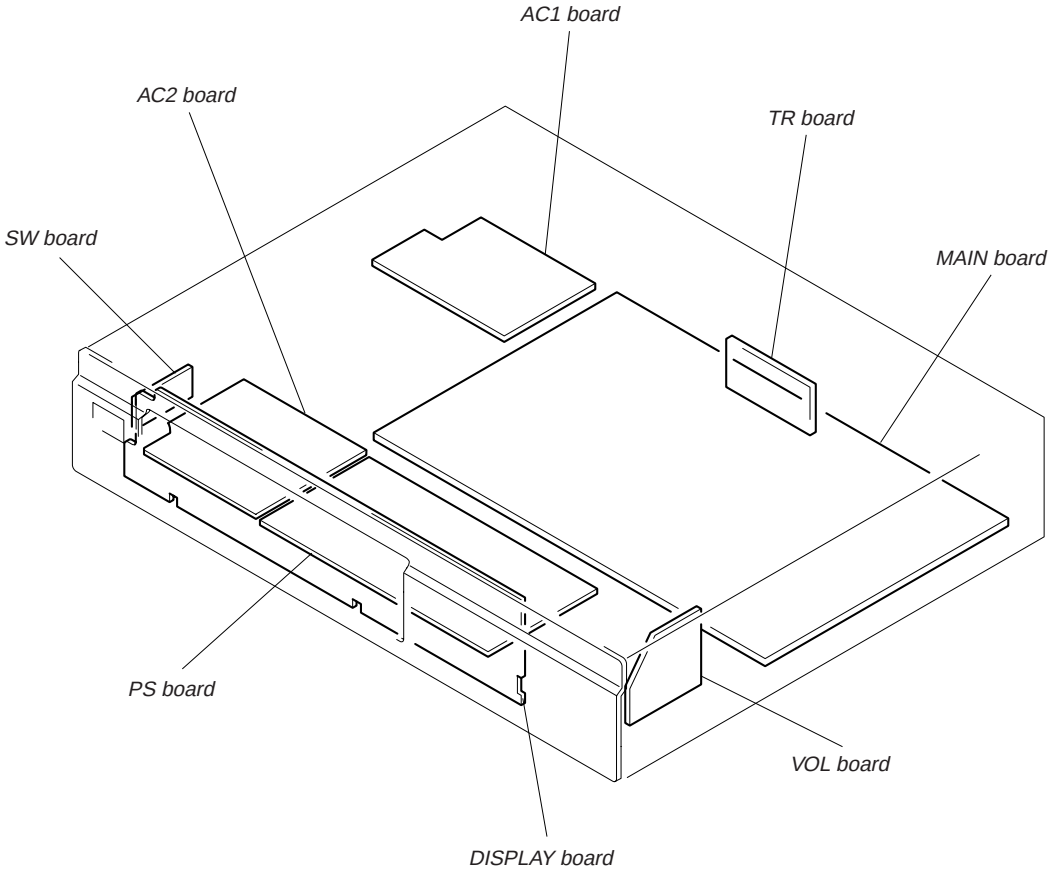

5-2. BLOCK DIAGRAMS
—DA SECTION—

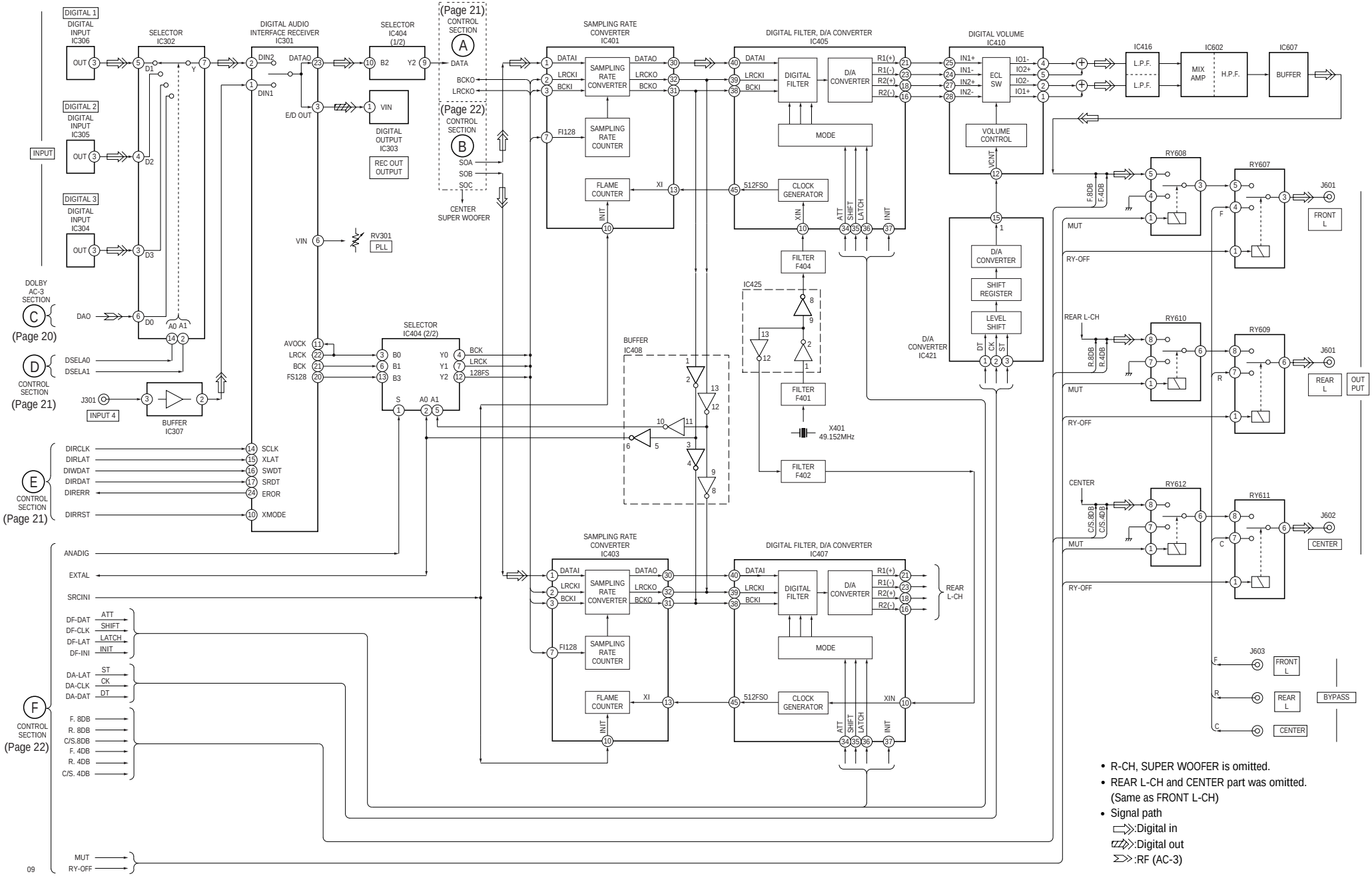

- R-CH, SUPER WOOFER is omitted.
- REAR L-CH and CENTER part was omitted. (Same as FRONT L-CH)
- Signal path
  - :Digital in
  - :Digital out
  - :RF (AC-3)

—AC-3 (RF) SECTION—

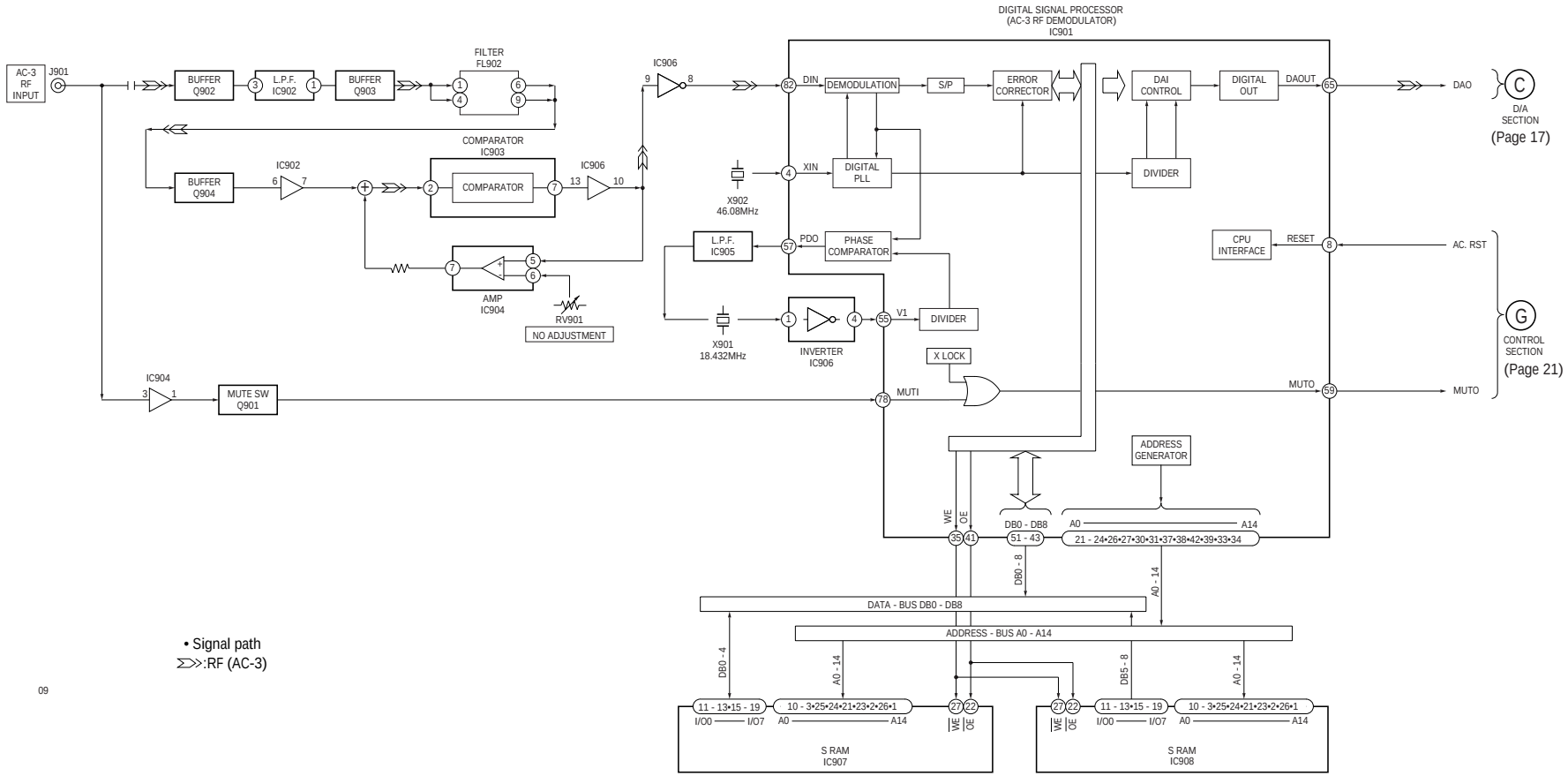

• Signal path
:RF (AC-3)

09

—CONTROL SECTION—

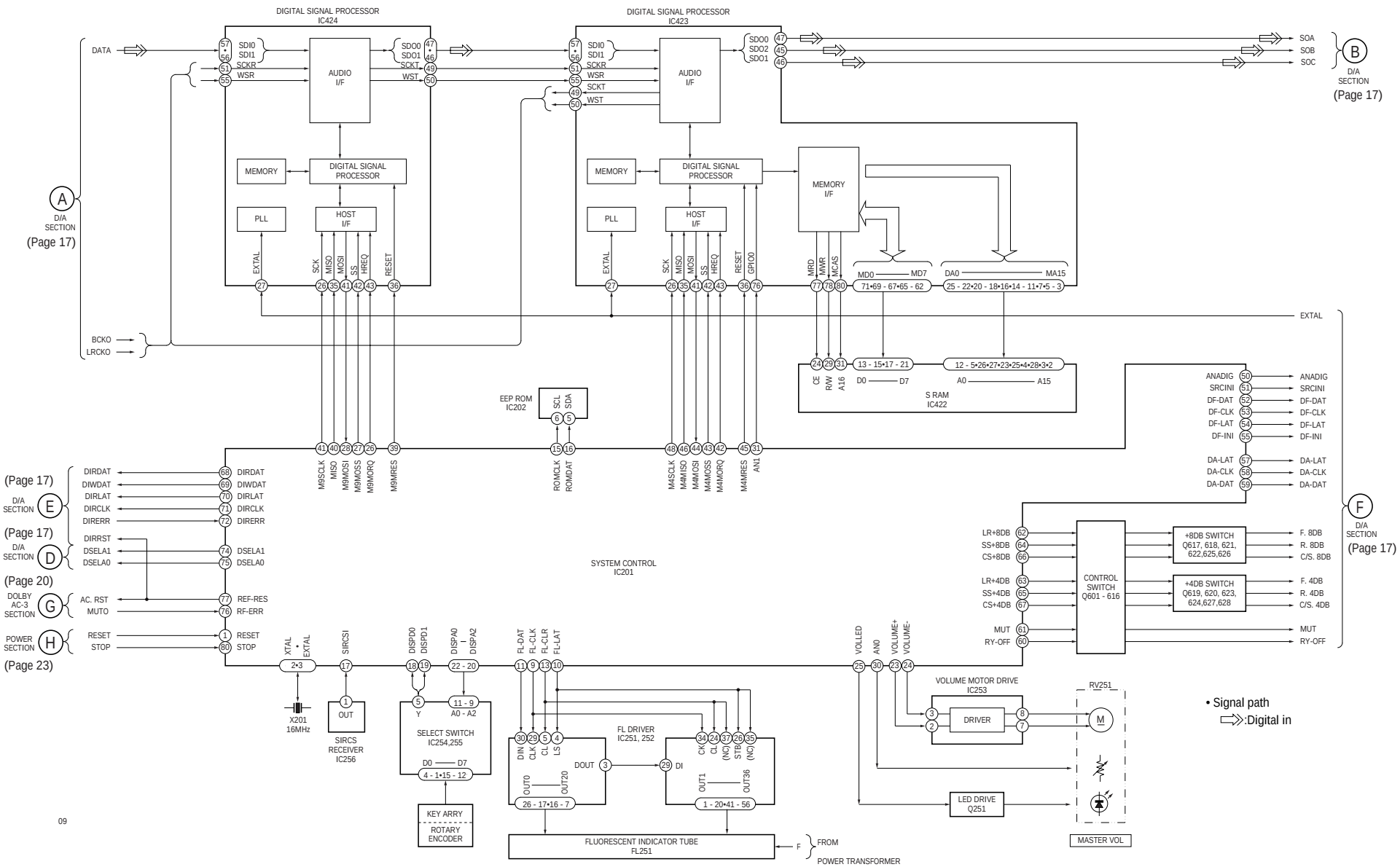

— POWER SECTION —

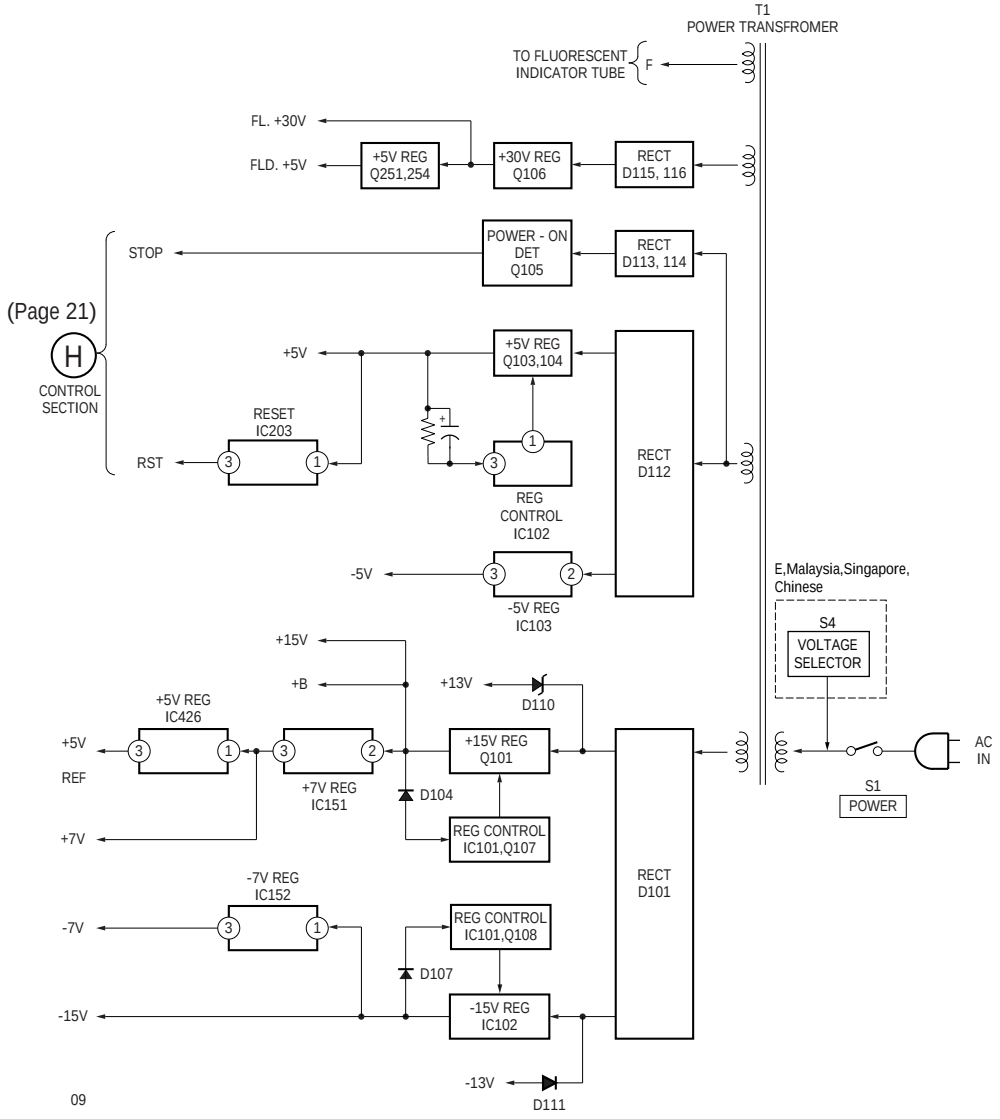

5-3. PRINTED WIRING BOARD — MAIN SECTION —

• See page 16 for Circuit Boards Location.

• **Semiconductor Location**

Ref. No.	Location	Ref. No.	Location
D151	G-6	IC603	G-11
D152	G-6	IC604	G-10
D201	H-4	IC605	G-8
D401	F-7	IC606	G-7
D607	E-9	IC607	F-13
D608	E-14	IC608	F-11
D901	H-1	IC609	F-8
		IC901	J-2
IC151	F-27	IC902	F-2
IC152	F-27	IC903	G-2
IC201	I-5	IC904	H-2
IC202	I-3	IC905	G-1
IC203	H-29	IC906	I-2
IC301	H-5	IC907	K-2
IC302	G-4		
IC303	D-25	Q601	B-26
IC304	D-27	Q602	A-25
IC305	D-28	Q603	B-26
IC306	D-29	Q604	A-25
IC307	D-26	Q605	B-25
IC401	K-13	Q606	A-24
IC402	K-11	Q607	B-25
IC403	K-8	Q608	A-24
IC404	K-7	Q609	B-24
IC405	K-15	Q610	A-24
IC406	K-12	Q611	A-26
IC407	K-9	Q612	A-26
IC408	L-22	Q613	A-26
IC409	J-17	Q614	A-27
IC410	J-19	Q615	B-27
IC411	J-20	Q616	A-27
IC412	J-22	Q617	G-14
IC413	J-24	Q618	F-14
IC414	J-25	Q619	F-14
IC415	G-14	Q620	F-14
IC416	G-13	Q621	G-12
IC417	G-12	Q622	F-12
IC418	G-10	Q623	F-12
IC419	G-9	Q624	F-12
IC420	G-8	Q625	G-9
IC421	H-6	Q626	F-9
IC422	L-5	Q627	F-9
IC423	K-5	Q628	F-9
IC424	K-3	Q901	H-2
IC425	H-15	Q902	E-2
IC426	I-6	Q903	F-3
IC601	G-14	Q904	F-2
IC602	G-12		

Note:

- : parts extracted from the component side.
- : Through hole.
- : Pattern from the side which enable seeing. (The other layers' patterns are not indicated.)

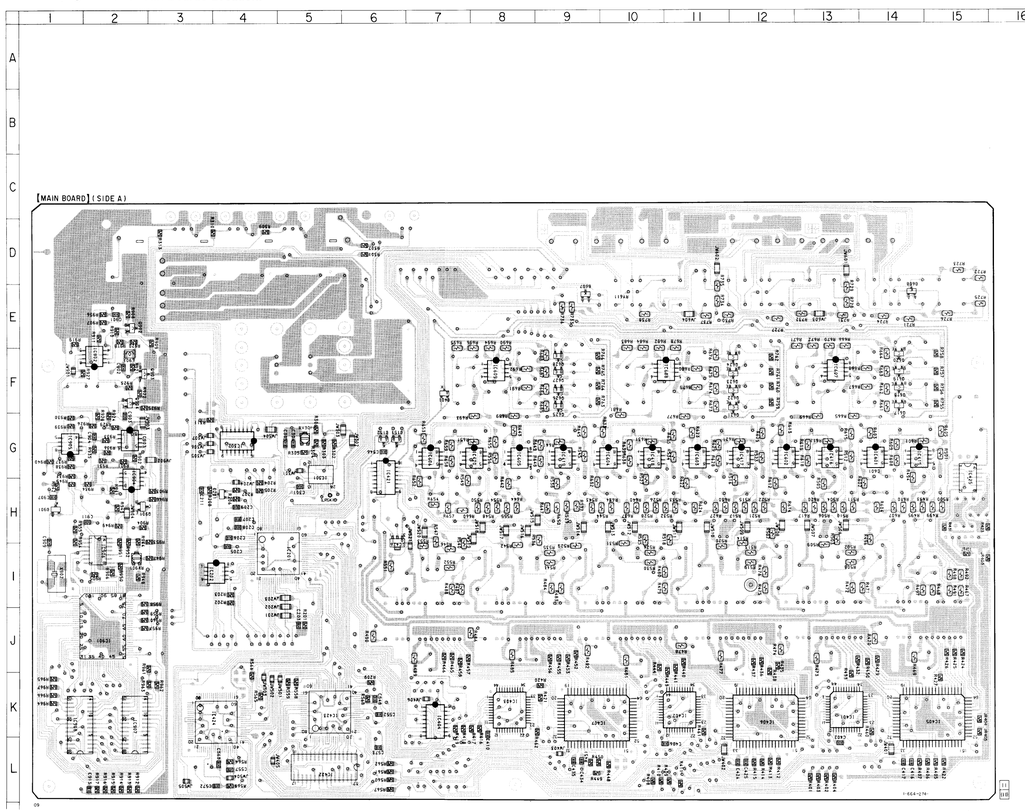

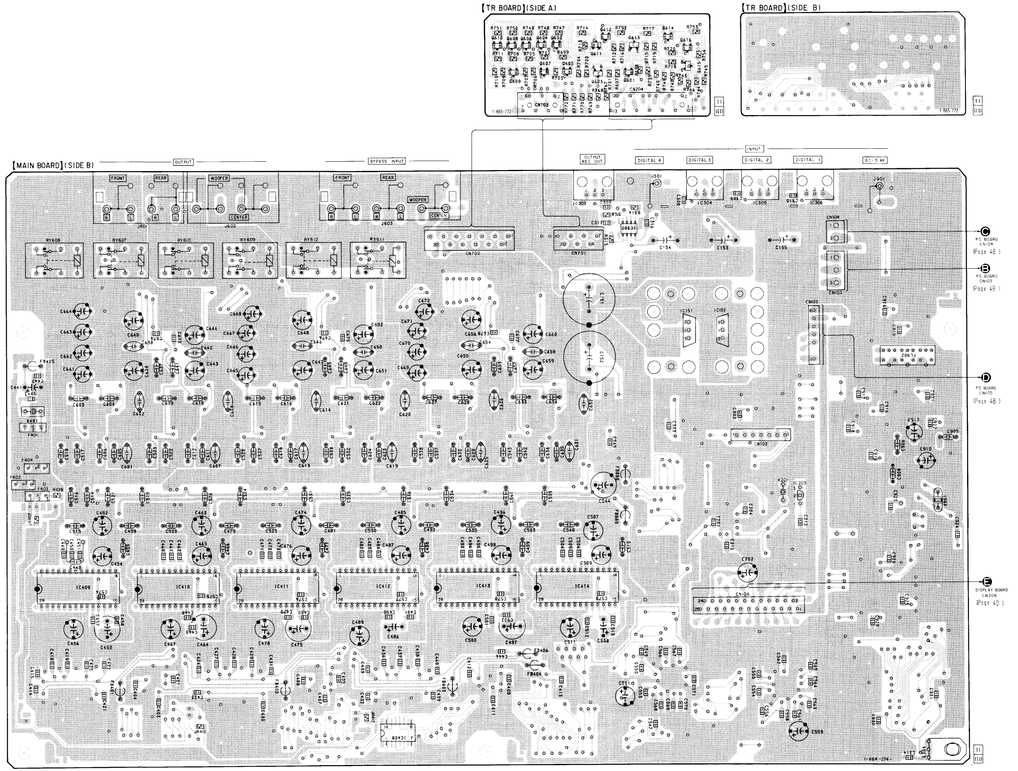

5-4. SCHEMATIC DIAGRAM — CONTROL SECTION —

• See page 51 for IC Pin Functions. • See page 62 for IC Block Diagrams.

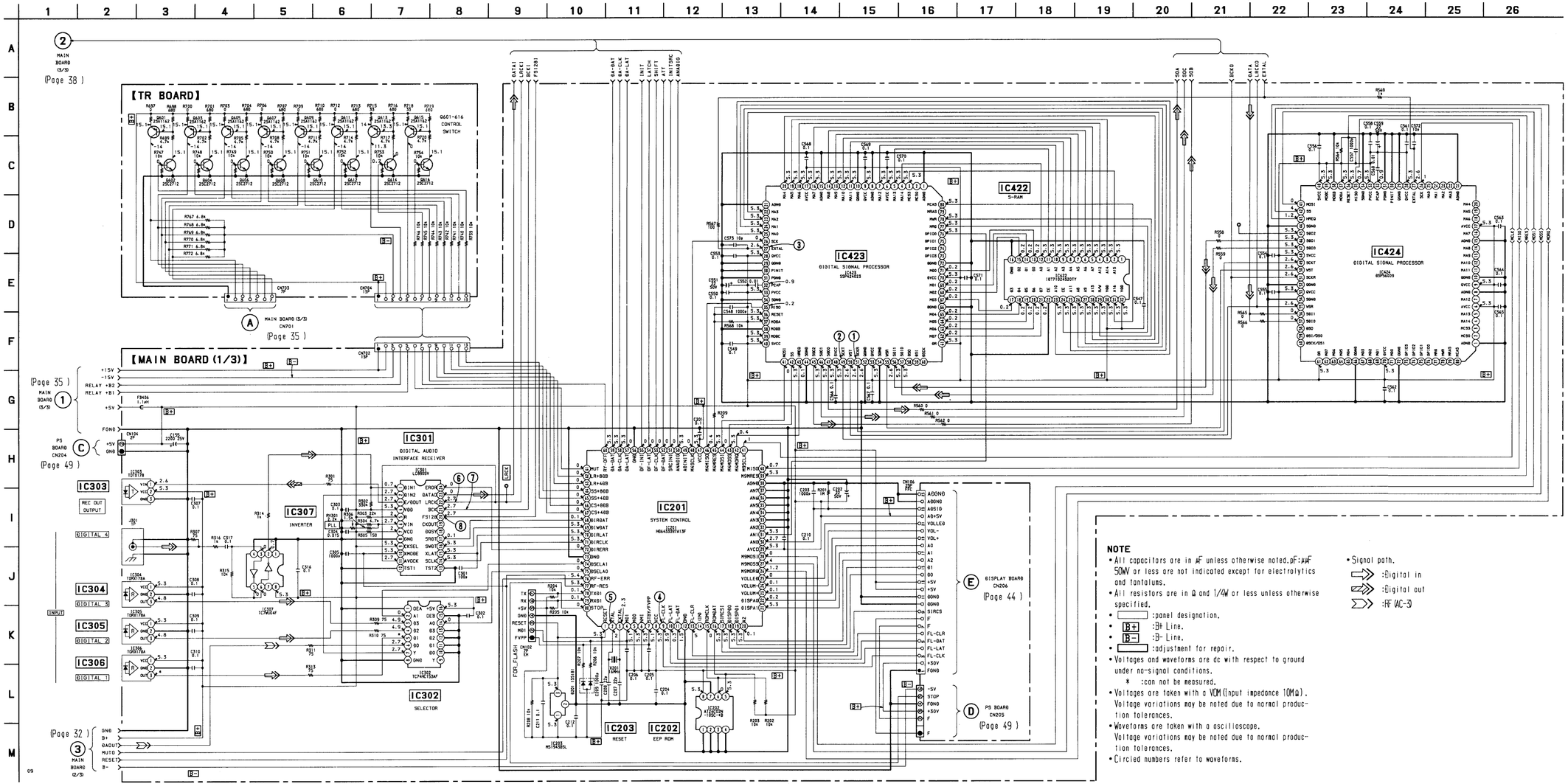

NOTE

- All capacitors are in μF unless otherwise noted. pF: μμF 50WV or less are not indicated except for electrolytics and tantalums.
- All resistors are in Ω and 1/4W or less unless otherwise specified.
- ▭ : panel designation.
- B+ : B+ Line.
- B- : B- Line.
- ▭ : adjustment for repair.
- Voltages and waveforms are dc with respect to ground under no-signal conditions.
  - * : can not be measured.
- Voltages are taken with a VOM (Input impedance 10MΩ). Voltage variations may be noted due to normal production tolerances.
- Waveforms are taken with a oscilloscope. Voltage variations may be noted due to normal production tolerances.
- Circled numbers refer to waveforms.

• Signal path.
- ⇒ : Digital in
- ⇒ : Digital out
- ⇒ : FF (AC-3)

• Waveforms

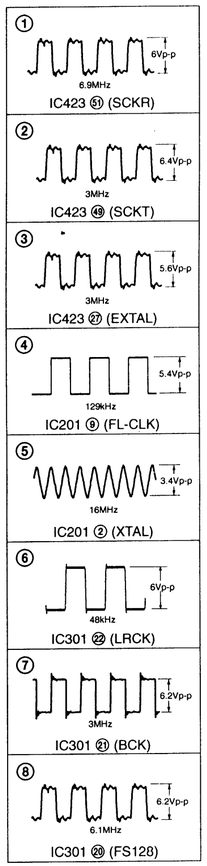

5-5. SCHEMATIC DIAGRAM — DOLBY AC-3 SECTION —

- See page 25 for Printed Wiring Board. (Main board)
- See page 51 for IC Pin Functions.
- See page 62 for IC Block Diagrams.

• Waveforms

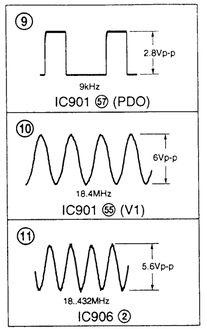

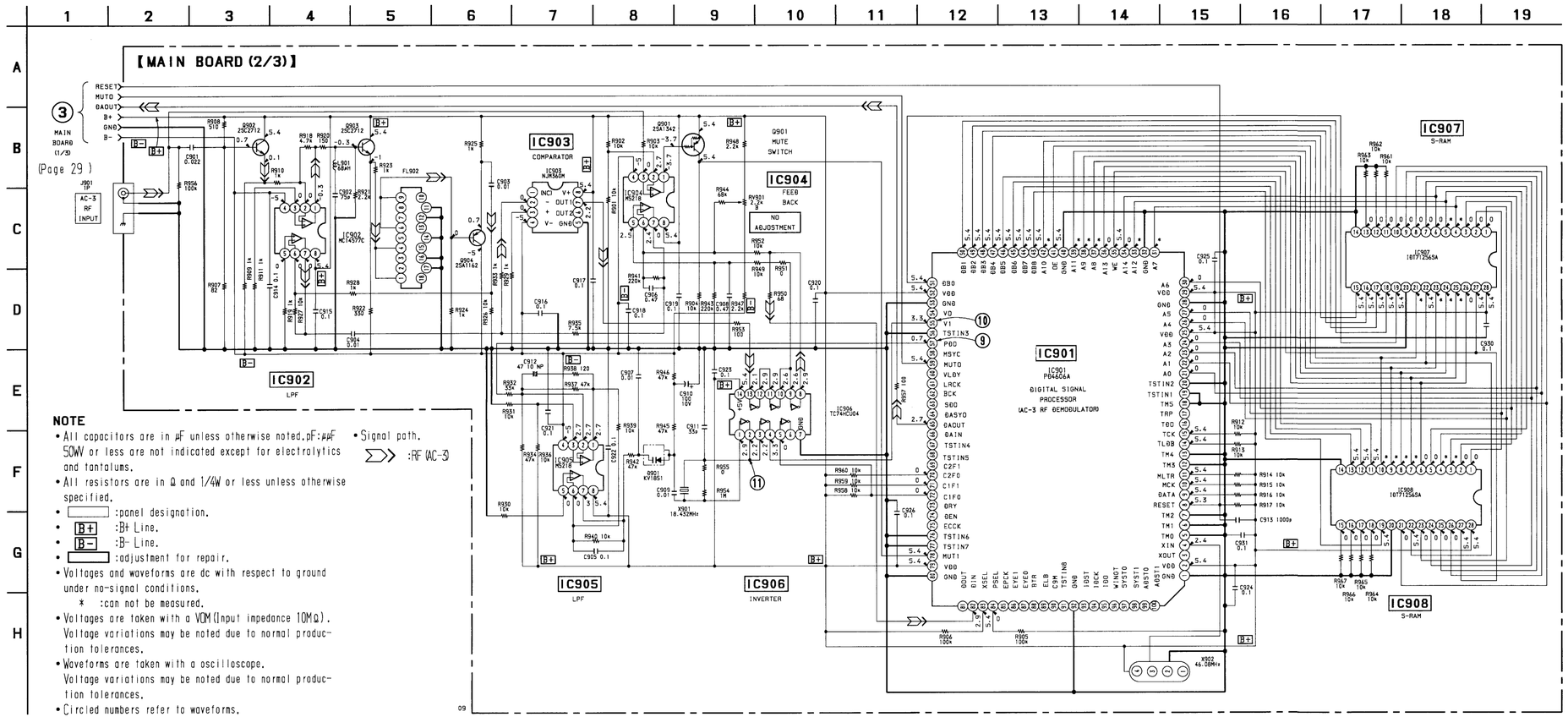

5-6. SCHEMATIC DIAGRAM — D/A SECTION —

- See page 25 for Printed Wiring Board. (Main board)
- See page 51 for IC Pin Functions.
- See page 62 for IC Block Diagrams.

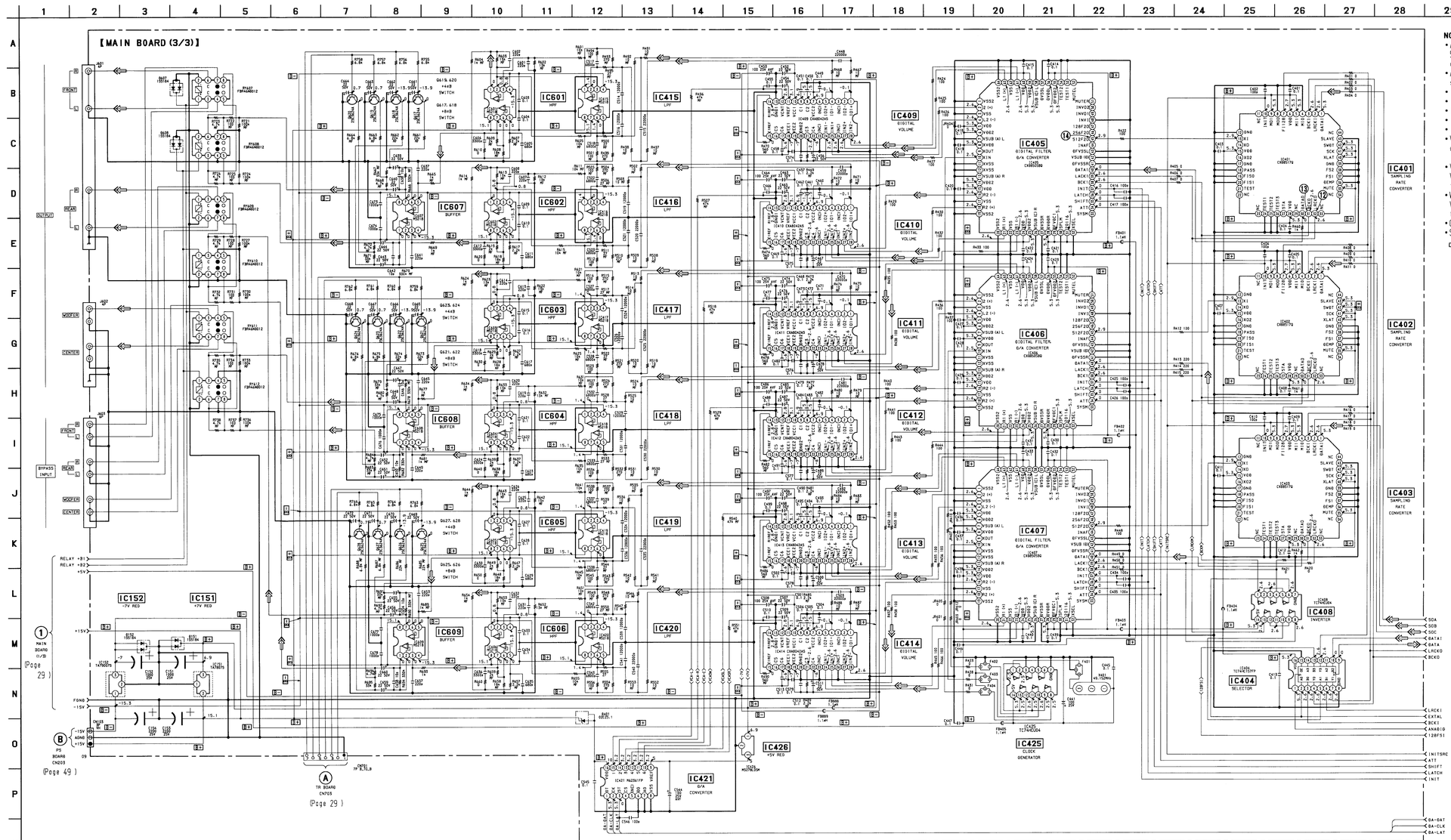

• Waveforms

⑫ 6.4Vp-p, 48kHz — IC401 ㉒ (LRCKO)

⑬ 6.2Vp-p, 3MHz — IC401 ⑨ (BCKO)

⑭ 4.1Vp-p, 24.6MHz — IC405 ㊹ (512F20)

NOTE

- All capacitors are in μF unless otherwise noted. pF: μμF. 50WV or less are not indicated except for electrolytics and tantalums.
- All resistors are in Ω and 1/4W or less unless otherwise specified.
- MF : ±2% indicates tolerance.
- △ : internal component.
- ▭ : panel designation.
- B+ : B+ Line.
- B− : B− Line.
- Voltages and waveforms are dc with respect to ground under no-signal conditions.
- ※ : can not be measured.
- Voltages are taken with a VOM (Input impedance 10MΩ). Voltage variations may be noted due to normal production tolerances.
- Waveforms are taken with a oscilloscope. Voltage variations may be noted due to normal production tolerances.
- Circled numbers refer to waveforms.
- Signal path. ⇨ : Digital in

5-7. PRINTED WIRING BOARD — DISPLAY SECTION —

• See page 16 for Circuit Boards Location.

• Semiconductor Location

Ref. No.	Location
D251	F-5
D252	G-5
D253	G-4
D254	G-4
D255	E-3
D257	G-5
D258	G-4
IC251	F-13
IC252	F-12
IC253	F-3
IC254	F-9
IC255	F-8
IC256	F-15
Q251	F-4

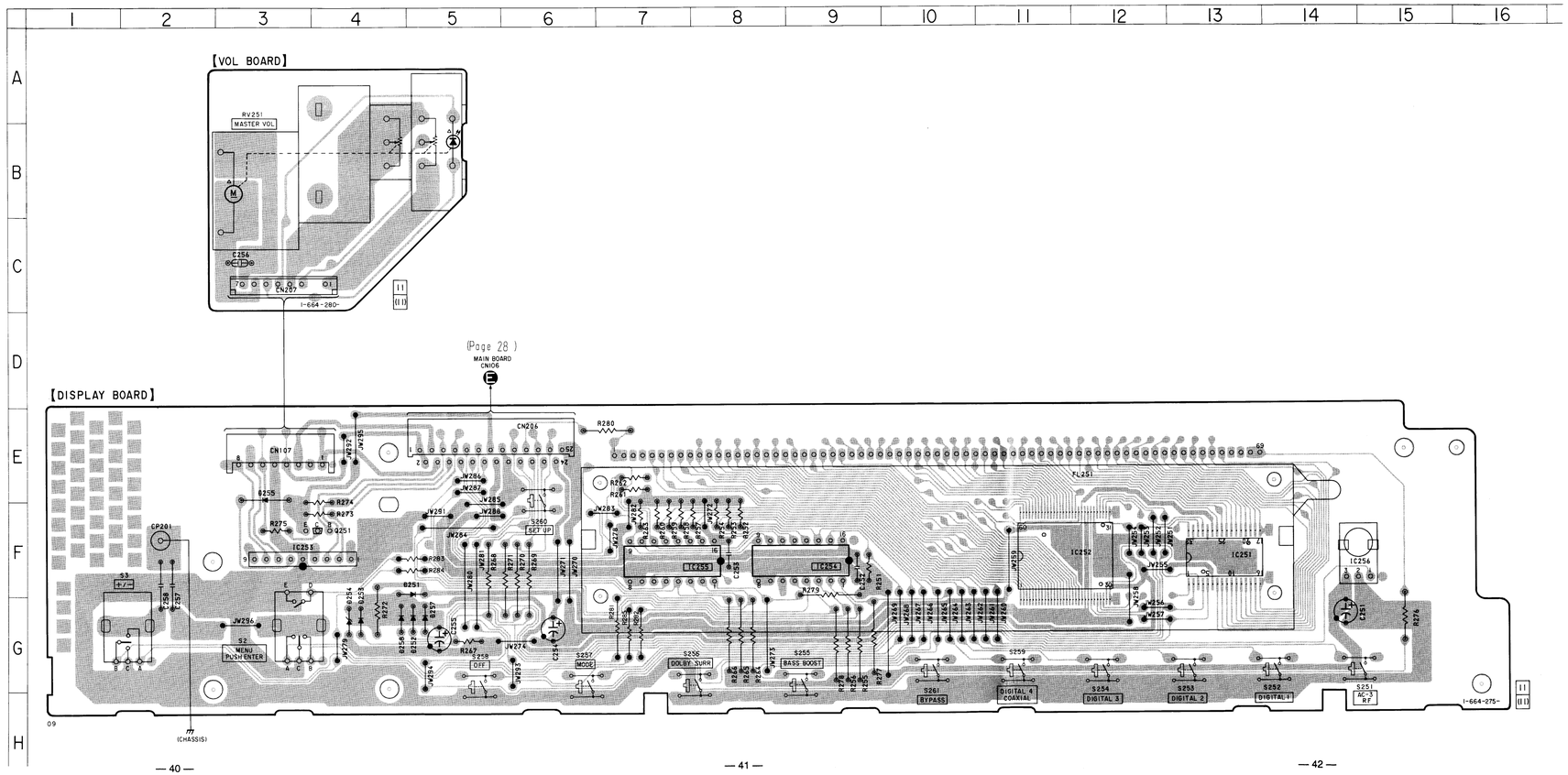

Note:
- ⊶ : parts extracted from the component side.
- △ : internal component.
- ▒ : Pattern from the side which enable seeing.

5-8. SCHEMATIC DIAGRAM — DISPLAY SECTION —

• See page 62 for IC Block Diagrams.

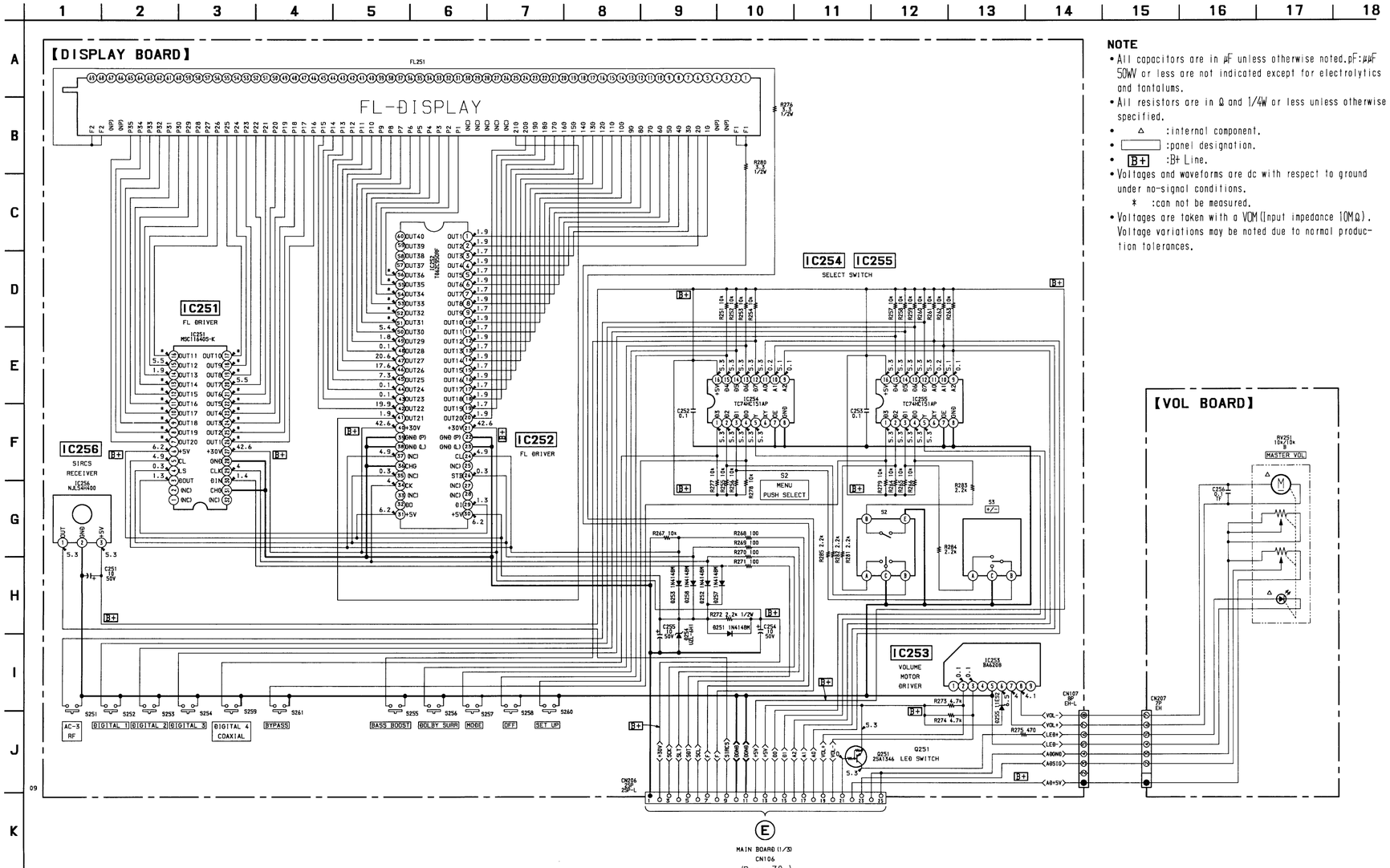

NOTE

- All capacitors are in μF unless otherwise noted. pF: μμF 50WV or less are not indicated except for electrolytics and tantalums.
- All resistors are in Ω and 1/4W or less unless otherwise specified.
- △ :internal component.
- ▭ :panel designation.
- B+ :B+ Line.
- Voltages and waveforms are dc with respect to ground under no-signal conditions.
  - * :can not be measured.
- Voltages are taken with a VOM (Input impedance 10MΩ). Voltage variations may be noted due to normal production tolerances.

5-9. PRINTED WIRING BOARD — POWER SECTION —

• See page 16 for Circuit Boards Location.

• **Semiconductor Location**

Ref. No.	Location
D101	H-5
D102	G-14
D103	H-13
D104	G-15
D107	H-14
D108	G-13
D109	H-13
D110	J-13
D111	I-15
D112	H-3
D113	H-3
D114	H-3
D115	H-2
D116	H-2
D117	H-2
D118	H-2
D119	H-8
D120	H-7
D121	H-8
IC101	G-13
IC102	H-9
IC103	H-11
Q101	I-13
Q102	I-15
Q103	I-9
Q104	I-11
Q105	G-11
Q106	H-8
Q107	G-12
Q108	H-13

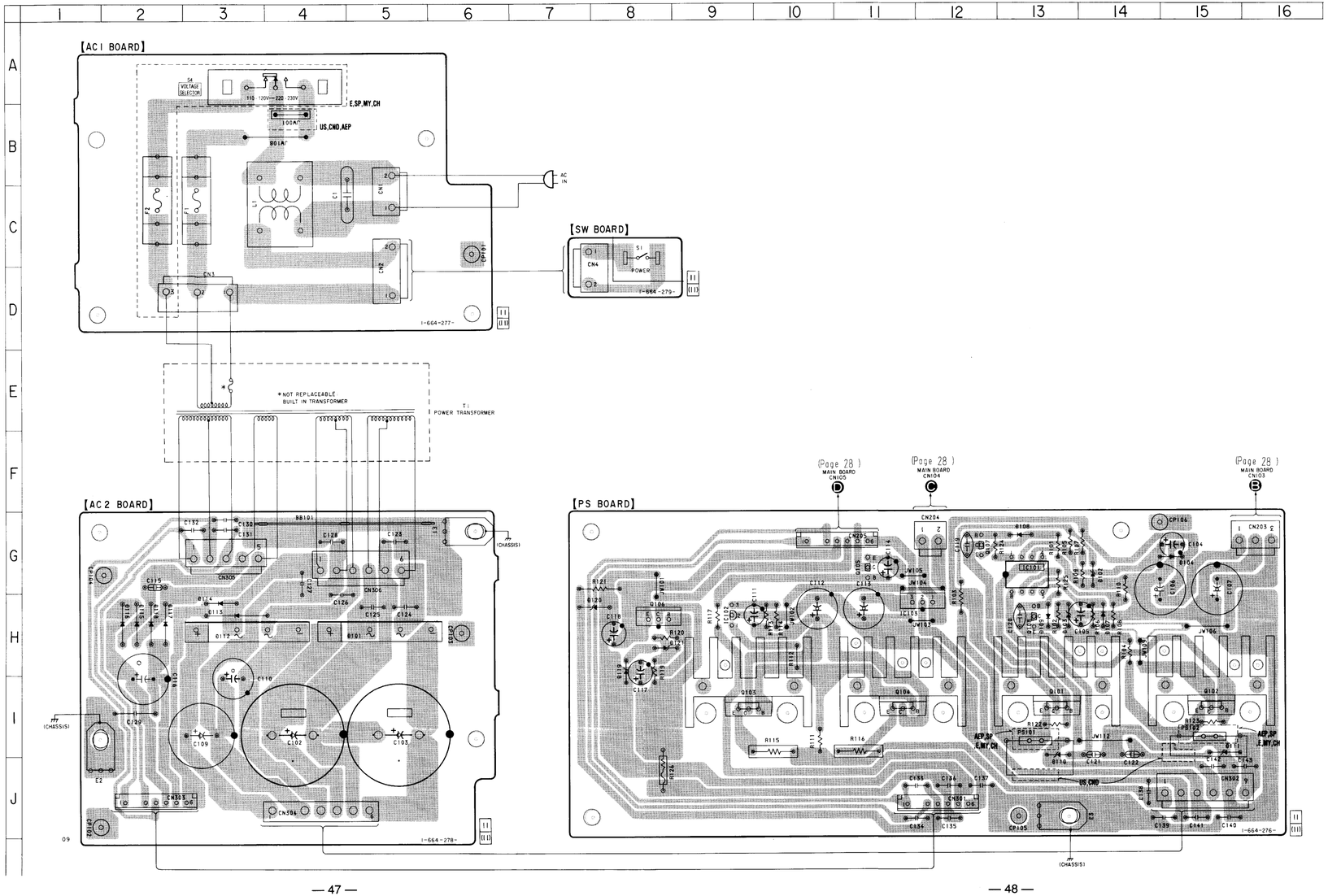

Note:

- ○——: parts extracted from the component side.
- ▒▒▒: Pattern from the side which enable seeing.
- Abbreviation
  CND : Canadian model.
  SP : Singapore model.
  MY : Malaysia model.
  CH : Chinese model.

5-10. SCHEMATIC DIAGRAM — POWER SECTION —

• See page 62 for IC Block Diagrams.

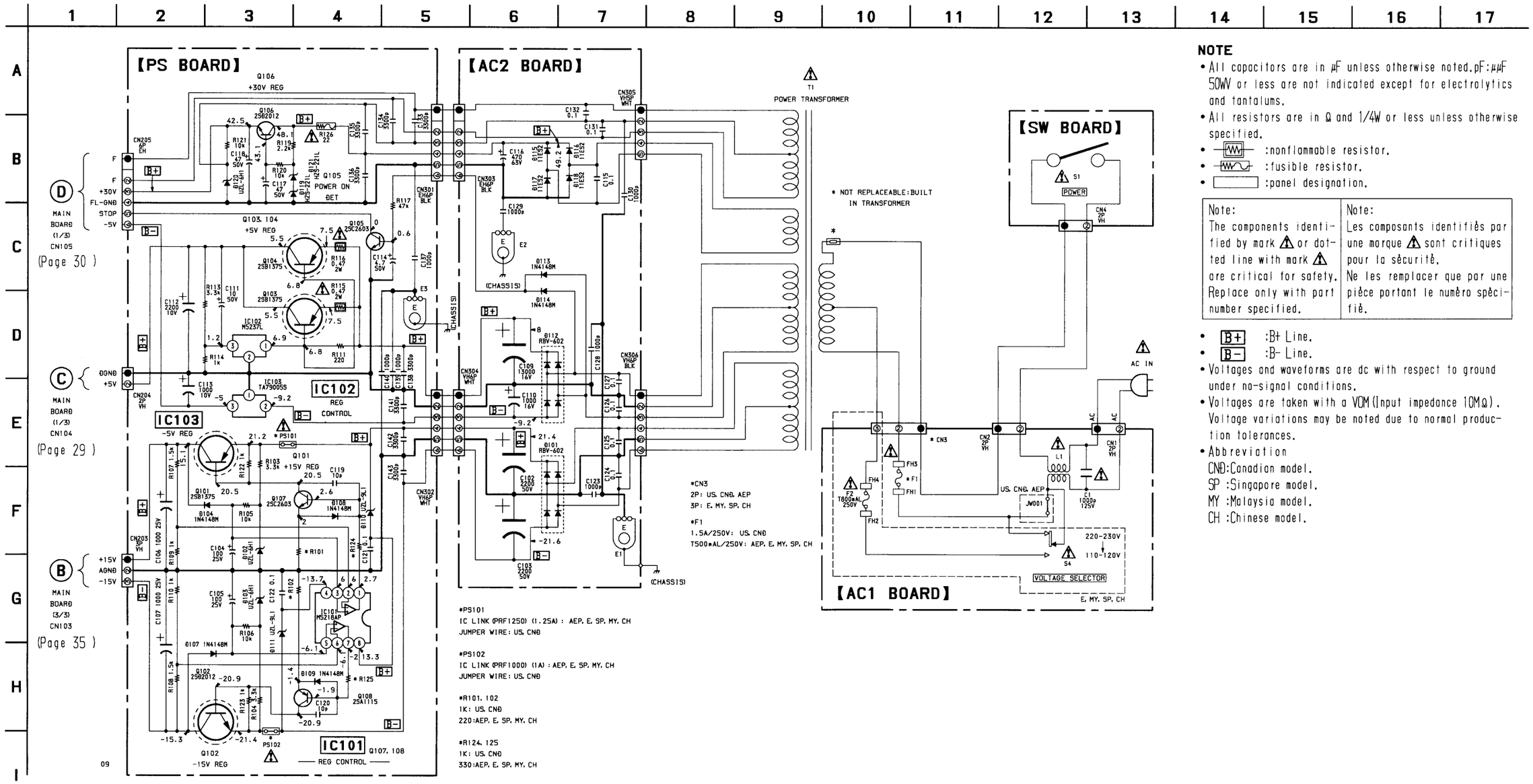

NOTE

- All capacitors are in μF unless otherwise noted. pF: μμF
  50WV or less are not indicated except for electrolytics and tantalums.
- All resistors are in Ω and 1/4W or less unless otherwise specified.
- ▭ :nonflammable resistor.
- ▭ :fusible resistor.
- ▭ :panel designation.

Note:	Note:
The components identified by mark ⚠ or dotted line with mark ⚠ are critical for safety. Replace only with part number specified.	Les composants identifiés par une marque ⚠ sont critiques pour la sécurité. Ne les remplacer que par une pièce portant le numéro spécifié.

- B+ :B+ Line.
- B− :B− Line.
- Voltages and waveforms are dc with respect to ground under no-signal conditions.
- Voltages are taken with a VOM (Input impedance 10MΩ). Voltage variations may be noted due to normal production tolerances.
- Abbreviation
  CND: Canadian model.
  SP: Singapore model.
  MY: Malaysia model.
  CH: Chinese model.

5-11. IC PIN FUNCTIONS

• IC201 System Controller (HD6433397A13F)

Pin No.	Pin Name	I/O	Function
1	RESET	I	Reset input (Reset at “L”)
2	XTAL	O	Crystal oscillation output (16 MHz)
3	EXTAL	I	Crystal oscillation input (16 MHz)
4	MD1	I	Normally connected to +5V
5	MD0	I	Normally connected to +5V
6	NMI	I	Normally connected to +5V
7	FVPP	I	Normally connected to +5V
8	VCC	–	+5V power supply
9	FL-CLK	O	Clock output to FL driver
10	FL-LAT	O	Latch output to FL driver
11	FL-DAT	O	Data output to FL driver
12	GND	–	Ground
13	FL-CLR	O	Clear output to FL driver
14	(IN)	I	Not used
15	ROMCLK	O	Clock output to EEPROM
16	ROMDAT	I/O	Data input/output with to EEPROM
17	SIRCSI	I	Remote control signal input
18	DISPD0	I	Data input from selector
19	DISPD1	I	Data input from selector
20	DISPA2	O	Select signal output to selector
21	DISPA1	O	Select signal output to selector
22	DISPA0	O	Select signal output to selector
23	VOLUM +	O	Volume motor control (+) output
24	VOLUM –	O	Volume motor control (–) output
25	VOLLED	O	Volume LED output
26	M9MORQ	I	Data ready signal input from DSP56009
27	M9MOSS	O	Data request signal output to DSP56009
28	M9MOSI	O	Data output to DSP56009
29	AVCC	–	Analog system +5V power supply
30	AN0	I	Master VR position detection input
31	AN1	I	LFE signal detection input
32	AN2	I	Not used
33	AN3	I	Not used
34	AN4	I	Not used
35	AN5	I	Not used
36	AN6	I	Not used
37	AN7	I	Not used
38	AGND	–	Analog system ground
39	M9MRES	O	Reset output to DSP56009
40	M9MISO	I	Data input from DSP56009

Pin No.	Pin Name	I/O	Function
41	M9SCLK	O	Clock output to DSP56009
42	M4MORQ	I	Data ready signal input from SSP424023
43	M4MOSS	O	Data request signal output to SSP424023
44	M4MOSI	O	Data output to SSP424023
45	M4MRES	O	Reset output to SSP424023
46	M4MISO	I	Data input from SSP424023
47	VCC	–	+5V power supply
48	M4SCLK	O	Clock output to SSP424023
49	ADINIT	O	Not used
50	ANADIG	O	Analog digital switching, Digital at “H”
51	SRCINI	O	Initialize output to CXD8517Q
52	DF-DAT	O	Data output to CXD8505BQ
53	DF-CLK	O	Clock output to CXD8505BQ
54	DF-LAT	O	Latch output to CXD8505BQ
55	DF-INI	O	Initialize output to CXD8505BQ
56	GND	–	Ground
57	DA-LAT	O	Latch output to M62361FP
58	DA-CLK	O	Clock output to M62361FP
59	DA-DAT	O	Data output to M62361FP
60	RY-OFF	O	BYPASS relay output. Bypass at “L”
61	RY-MUT	O	Mute relay output. Sounds are produced at “H”
62	LR +8DB	O	Front output gain +8 dB
63	LR +4DB	O	Front output gain +4 dB
64	SS +8DB	O	Rear output gain +8 dB
65	SS +4DB	O	Rear output gain +4 dB
66	CS +8DB	O	Center/sub-woofer output gain +8dB
67	CS +4DB	O	Center/sub-woofer output gain +4dB
68	DIRDAT	O	Data output to LC8905V
69	DIWDAT	I	Data input from LC8905V
70	DIRLAT	O	Latch output to LC8905V
71	DIRCLK	O	Clock output to LC8905V
72	DIRERR	I	PLL error signal input from LC8905V
73	GND	–	Ground
74	DSELA1	O	Digital input selector output
75	DSELA0	O	Digital input selector output
76	RF-ERR	I	Error input from PD4606A
77	RF-RES	O	Reset output to PD4606A
78	TXD1	–	Not used
79	RXD1	–	Not used
80	STOP	I	Power supply failure detection input

• IC301 Digital Audio Interface Receiver (LC8905V)

Pin No.	Pin Name	I/O	Function
1	DIN1	I	Data input with built-in amplifier (Responding to the coaxial optical module)
2	DIN2	I	Data input (Responding to the optical module)
3	E/OUT	O	Emphasis, input bi-phase, validity flag output
4	V_{DD}	–	Power supply (+5V)
5	R	I	VCO gain control input (Fixed at “H”)
6	VIN	I	VCO freerunning frequency setting input
7	VCO	O	LPF setting of PLL (Fixed at “H”)
8	GND	–	Ground
9	CKSEL	I	System clock select input (384fs, 512fs) (Connected to the power supply.)
10	XMODE	I	Reset input
11	AVOCK	I	Clock input for preventing PLL lock failure
12	TST1	I	Test input (Normally “L”)
13	TST2	I	
14	SCLK	I	Microcomputer IF clock input
15	XLAT	I	Microcomputer IF latch/chip enable input
16	SWDT	I	Microcomputer IF write data input
17	SRDT	O	Microcomputer IF read data output
18	DQSY	O	Microcomputer IF Sub-Q sync and ID sync output (Not used)
19	CKOUT	O	VCO clock output (Freerunning, 384fs, 512fs) (Not used)
20	FS128	O	128fs clock output
21	BCK	O	Bit clock output
22	LRCK	O	L/R clock output
23	DATAO	O	Audio data output
24	EROR	O	PLL lock error mute output

• **IC401, 402, 403 Sampling Rate Converter (CXD8517Q)**

Pin No.	Pin Name	I/O	Function
1	DATAI	I	Serial data input
2	LRCKI	I	Input serial data fs word clock input (Schemidt)
3	BCKI	I	Input serial data bit clock input
4	MI0	I	Input serial data format setting input 0
5	MI1	I	Input serial data format setting input 1
6	VDD	–	+5V power supply
7	FI128	I	Input data fs reference clock input (128fs)
8	MO0	I	Output data format setting input 0 (Fixed at “L”)
9	MO1	I	Output data format setting input 1 (Fixed at “H”)
10	INIT	I	Initializing input (Schmidt). “L” : Initializing, “H” : Normal operation
11	NC	–	Not used
12	GND	–	Ground
13	XI	I	Inverter input for oscillating the crystal oscillator (512fo master clock input)
14	XO	O	Inverter output for oscillating the crystal oscillator (Not used)
15	VDD	–	+5V power supply
16	XO2	O	Oscillation clock division output: 256fs (Not used)
17	GND	–	Ground
18	PASS	I	Input data through output mode setting input. “L” : Normal operation, “H” : Through (When through: Effective operation output only for deemphasis, attenuation) (Fixed at “L”)
19	FIS0	I	FI128 clock input division ratio setting input (Fixed at “L”)
20	FIS1	I	FI128 clock input division ratio setting input (Fixed at “L”)
21	TEST	O	Test input 0 (Not used)
22	NC	–	Not used
23	NC	–	
24	TEST1	I	Test input 1 (Fixed at “L”)
25	TEST2	I	Test input 2 (Fixed at “L”)
26	TEST3	I	Test input 3 (Fixed at “L”)
27	STA	O	fs conversion ratio measurement condition monitor output (Not used)
28	VDD	–	+5V power supply
29	NC	–	Not used
30	DATAO	O	Serial data output (fso output)
31	BCKO	I/O	Output serial data bit clock input/output
32	LRCKO	I/O	Output serial data fs word clock input/output
33	NC	–	Not used
34	NC	–	
35	MUTE	I	Data output mute setting input. “L” : Mute, “H” : Normal operation Synchronized with LRCK (“0” data only for DATAO output) (Fixed at “H”)
36	DEMP	I	Deemphasis setting input. “L” : OFF, “H” : ON (Fixed at “L”)
37	FS1	I	Deemphasis setting output fso frequency selection input 1 (Fixed at “L”)
38	FS2	I	Deemphasis setting output fso frequency selection input 2 (Fixed at “L”)
39	GND	–	Ground
40	XLAT	I	Attenuation, mode setting data latch pulse input (Fixed at “H”)
41	SCK	I	Attenuation, mode setting clock input (Fixed at “H”)
42	SWDT	I	Attenuation, mode setting data input (Fixed at “H”)
43	SLAVE	I	Sync mode selection. “L” : Slave, “H” : Master (Fixed at “H”)
44	NC	–	Not used

• **IC423 Digital Signal Processor (SSP424023)**

Pin No.	Pin Name	I/O	Function
1	AGND	–	Address buffer ground
2	MCS0	O	Chip select 0 output to S-RAM (Not used)
3	MCS3	O	Chip select 3 output to S-RAM
4	MA14	O	Address data output to S-RAM
5	MA13	O	
6	AVCC	–	Address bus buffer power supply (+5V)
7	MA12	O	Address data output to S-RAM
8	AGND	–	Ground for address bus buffer
9	QVCC	–	Power supply for internal logic (+5V)
10	QGND	–	Ground for internal logic
11	MA11	O	Address data output to S-RAM
12	MA10	O	
13	MA9	O	
14	MA8	O	
15	AGND	–	Ground for address bus buffer
16	MA7	O	Address data output to S-RAM
17	AVCC	–	Power supply for address bus buffer (+5V)
18	MA6	O	Address data output to S-RAM
19	MA5	O	
20	MA4	O	
21	AGND	–	Ground for address bus buffer
22	MA3	O	Address data output to S-RAM
23	MA2	O	
24	MA1	O	
25	MA0	O	
26	SCK	I	SPI serial clock signal input from system controller
27	EXTAL	I	External frequency input (3 MHz)
28	QVCC	–	Power supply for internal logic (+5V)
29	QGND	–	Ground for internal logic
30	PINIT	I	PLL initialize input (Fixed at “L”)
31	PGND	–	Ground for PLL
32	PCAP	I	PLL filter input (Connected to 0.01 μF capacitor)
33	PVCC	–	Power supply for PLL (+5V)
34	SGND	–	Ground for serial port
35	MISO	I	Master data signal input from system controller
36	RESET	I	Reset signal input from system controller
37	MODA	I	Mode select A (Fixed at “H”)
38	MODB	I	Mode select B (Fixed at “L”)
39	MODC	I	Mode select C (Fixed at “H”)
40	SVCC	–	Power supply for serial port (+5V)

Pin No.	Pin Name	I/O	Function
41	MOSI	O	Master data signal output to system controller
42	SS	I	SPI slave select signal input from system controller
43	HREQ	I	Host request signal input from system controller
44	SGND	–	Ground for serial port
45	SDO2	O	Audio serial data 2 signal output
46	SDO1	O	Audio serial data 1 signal output
47	SDO0	O	Audio serial data 0 signal output
48	SVCC	–	Power supply for serial port (+5V)
49	SCKT	O	Serial clock transmission
50	WST	O	Word select transmission
51	SCKR	I	Serial clock reception
52	QGND	–	Ground for internal logic
53	QVCC	–	Power supply for internal logic (+5V)
54	SGND	–	Ground for serial port
55	WSR	I	Word select reception
56	SDI1	I	Audio serial data 1 signal input
57	SDI0	I	Audio serial data 0 signal input
58	DSO	O	Debug serial signal output (Not used)
59	DSI	I	Debug serial signal input (Not used)
60	DSCK	I	Debug serial clock signal input (Not used)
61	DR	I	Debug request input (Fixed at “H”)
62	MD7	I/O	Data input/output with S-RAM
63	MD6	I/O	
64	MD5	I/O	
65	MD4	I/O	
66	DGND	–	Ground for data bus buffer
67	MD3	I/O	Data input/output with S-RAM
68	MD2	I/O	
69	MD1	I/O	
70	DVCC	–	Power supply for data bus buffer (+5V)
71	MD0	I/O	Data input/output with S-RAM
72	DGND	–	Ground for data bus buffer
73	GPIO3	I/O	General DSP input/output (Not used)
74	GPIO2	I/O	
75	GPIO1	I/O	
76	GPIO0	I/O	General DSP input/output with system controller
77	MRD	O	Write strobe signal output to S-RAM
78	MWR	O	Read strobe signal output to S-RAM
79	MRAS	O	Low address strobe signal output to S-RAM
80	MCAS	O	Column address strobe signal output to S-RAM

• **IC424 Digital Signal Processor (DSP56009)**

Pin No.	Pin Name	I/O	Function
1	AGND	–	Address buffer ground
2	MCS0	O	Chip select 0 output to S-RAM (Not used)
3	MCS3	O	Chip select 3 output to S-RAM (Not used)
4	MA14	O	Address data output to S-RAM (Not used)
5	MA13	O	
6	AVCC	–	Address bus buffer power supply (+5V)
7	MA12	O	Address data output to S-RAM(Not used)
8	AGND	–	Ground for address bus buffer
9	QVCC	–	Power supply for internal logic (+5V)
10	QGND	–	Ground for internal logic
11	MA11	O	Address data output to S-RAM (Not used)
12	MA10	O	
13	MA9	O	
14	MA8	O	
15	AGND	–	Ground for address bus buffer
16	MA7	O	Address data output to S-RAM (Not used)
17	AVCC	–	Power supply for address bus buffer (+5V)
18	MA6	O	Address data output to S-RAM (Not used)
19	MA5	O	
20	MA4	O	
21	AGND	–	Ground for address bus buffer
22	MA3	O	Address data output to S-RAM (Not used)
23	MA2	O	
24	MA1	O	
25	MA0	O	
26	SCK	I	SPI serial clock signal input from system controller
27	EXTAL	I	External frequency input (3 MHz)
28	QVCC	–	Power supply for internal logic (+5V)
29	QGND	–	Ground for internal logic
30	PINIT	I	PLL initialize input (Fixed at “L”)
31	PGND	–	Ground for PLL
32	PCAP	I	PLL filter input (Connected to 0.01 µF capacitor)
33	PVCC	–	Power supply for PLL (+5V)
34	SGND	–	Ground for serial port
35	MISO	I	Master data signal input from system controller
36	RESET	I	Reset signal input from system controller
37	MODA	I	Mode select A (Fixed at “H”)
38	MODB	I	Mode select B (Fixed at “L”)
39	MODC	I	Mode select C (Fixed at “H”)
40	SVCC	–	Power supply for serial port (+5V)

Pin No.	Pin Name	I/O	Function
41	MOSI	O	Master data signal output to system controller
42	SS	I	SPI slave select signal input from system controller
43	HREQ	I	Host request signal input from system controller
44	SGND	–	Ground for serial port
45	SDO2	O	Audio serial data 2 signal output (Not used)
46	SDO1	O	Audio serial data 1 signal output
47	SDO0	O	Audio serial data 0 signal output
48	SVCC	–	Power supply for serial port (+5V)
49	SCKT	O	Serial clock transmission
50	WST	O	Word select transmission
51	SCKR	I	Serial clock reception
52	QGND	–	Ground for internal logic
53	QVCC	–	Power supply for internal logic (+5V)
54	SGND	–	Ground for serial port
55	WSR	I	Word select reception
56	SDI1	I	Audio serial data 1 signal input
57	SDI0	I	Audio serial data 0 signal input
58	DSO	O	Debug serial signal output (Not used)
59	DSI	I	Debug serial signal input (Not used)
60	DSCK	I	Debug serial clock signal input (Not used)
61	DR	I	Debug request input (Fixed at “H”)
62	MD7	I/O	Data input/output with S-RAM (Not used)
63	MD6	I/O	
64	MD5	I/O	
65	MD4	I/O	
66	DGND	–	Ground for data bus buffer
67	MD3	I/O	Data input/output with S-RAM (Not used)
68	MD2	I/O	
69	MD1	I/O	
70	DVCC	–	Power supply for data bus buffer (+5V)
71	MD0	I/O	Data input/output with S-RAM (Not used)
72	DGND	–	Ground for data bus buffer
73	GPIO3	I/O	General DSP input/output (Not used)
74	GPIO2	I/O	
75	GPIO1	I/O	
76	GPIO0	I/O	
77	MRD	O	Write strobe signal output to S-RAM (Not used)
78	MWR	O	Read strobe signal output to S-RAM (Not used)
79	MRAS	O	Low address strobe signal output to S-RAM (Not used)
80	MCAS	O	Column address strobe signal output to S-RAM (Not used)

• **IC901 Digital Signal Processor (AC-3 RF Demodulator) (PD4606A)**

Pin No.	Pin Name	I/O	Function
1	GND	–	Ground
2	VDD	–	Power supply (+5V)
3	XOUT	O	Crystal oscillation circuit output (Not used)
4	XIN	I	Crystal oscillation circuit input (46.08 MHz)
5	TM0	I	For IC test mode setting (Fixed at “L”)
6	TM1	I	
7	TM2	I	
8	RESET	I	System reset. Reset at “L”. Set to “ L” when power is turned ON
9	DATA	I	Serial data input from CPU (LSB first) (Fixed at “H”)
10	MCK	I	CPU serial input clock Latches data at rising edge of clock (Fixed at “H”)
11	MLTB	I	CPU input latch Latches serial data (8 bits) from CPU at register (Fixed at “H”)
12	TM3	I	For IC test mode setting (Fixed at “L”)
13	TM4	I	
14	TLDB	I	Tag code load signal Tag code is loaded in 16-bit shift register at “L” (Fixed at “H”)
15	TCK	I	Tag code output clock Data is output at rising edge of clock (Fixed at “H”)
16	TDO	O	Tag code serial data signal. (MSB first) (Not used)
17	TRP	O	Tag code renewal signal. “H” when no error in tag code when error correction operation of one block ends (Not used)
18	TM5	I	For IC test mode setting (Fixed at “L”)
19	TSTIN1	I	For testing IC (Fixed at “L”)
20	TSTIN2	I	
21	A0	O	Address output to external RAM. Address 0 (LSB)
22	A1	O	Address output to external RAM. Address 1
23	A2	O	Address output to external RAM. Address 2
24	A3	O	Address output to external RAM. Address 3
25	VDD	–	Power supply (+5V)
26	A4	O	Address output to external RAM. Address 4
27	A5	O	Address output to external RAM. Address 5
28	GND	–	Ground
29	VDD	–	Power supply (+5V)
30	A6	O	Address output to external RAM. Address 6
31	A7	O	Address output to external RAM. Address 7
32	GND	–	Ground
33	A12	O	Address output to external RAM. Address 12
34	A14	O	Address output to external RAM. Address 14 (MSB)
35	WE	O	Write enable signal to external RAM. Active at “L”

Pin No.	Pin Name	I/O	Function
36	A13	O	Address output to external RAM. Address 13
37	A8	O	Address output to external RAM. Address 8
38	A9	O	Address output to external RAM. Address 9
39	A11	O	Address output to external RAM. Address 11
40	GND	–	Ground
41	OE	O	Output enable signal to external RAM. Active at “L”
42	A10	O	Address output to external RAM. Address 10
43	DBP	I/O	Data terminal with external RAM. For erasure pointer
44	DB7	I/O	Data terminal with external RAM. Data bus 7
45	DB6	I/O	Data terminal with external RAM. Data bus 6
46	DB5	I/O	Data terminal with external RAM. Data bus 5
47	DB4	I/O	Data terminal with external RAM. Data bus 4
48	DB3	I/O	Data terminal with external RAM. Data bus 3
49	DB2	I/O	Data terminal with external RAM. Data bus 2
50	DB1	I/O	Data terminal with external RAM. Data bus 1
51	DB0	I/O	Data terminal with external RAM. Data bus 0
52	VDD	–	Power supply (+5V)
53	GND	–	Ground
54	VO	O	VCXO output (Not used)
55	VI	I	VCXO input
56	TSTIN3	I	For testing IC (Fixed at “L”)
57	PDO	O	Phase comparator output (3-state)
58	MSYC	O	“H” when AC-3 sync signal. For monitor (Not used)
59	MUTO	O	Muting output. Muting at “H” “H” when “MUTI=H” or not synchronized with AC-3
60	VLDY	O	Parity flag output. Data is correct when “L”. Data may be incorrect if “H” (Not used)
61	LRCK	O	L/Rch switching clock. 48 kHz. Lch when “H” (Not used)
62	BCK	O	Bit clock. 3.072 MHz (Not used)
63	SDO	O	Serial data output (Not used)
64	DASYO	O	Digital out preamble B identification signal (Not used)
65	DAOUT	O	Digital output
66	DAIN	I	Digital audio interface signal input Select a digital output processed inside IC by internal register setting or signal from “DAIN” and output to “DAOUT” (Not used)
67	TSTIN4	I	For testing IC (Not used)
68	TSTIN5	I	
69	C2F1	O	C2 error correction state display. Outputs if corrected properly (Not used)
70	C2F0	O	C2 error correction state display. Outputs number of errors at C2 (Fixed at “H”)
71	C1F1	O	C1 error correction state display. Outputs whether error is present at C1 (Fixed at “H”)
72	C1F0	O	C1 error correction state display. Outputs number of errors at C1 (Fixed at “H”)
73	DRY	O	For monitoring error correction (Not used)
74	DEN	O	
75	ECCK	O	Error correction sector clock. 576 kHz (Not used)

Pin No.	Pin Name	I/O	Function
76	TSTIN6	I	For testing IC (Fixed at “L”)
77	TSTIN7	I	
78	MUTI	I	Muting input. Muted at “H”
79	VDD	–	Power supply (+5V)
80	GND	–	Ground
81	DOUT	O	QPSK inverted output (Not used)
82	DIN	I	QPSK signal input
83	XSEL	I	Crystal select. Used at “H” (Fixed at “H”)
84	PSEL	I	PLL select. Used at “L” (Fixed at “L”)
85	EPCK	O	QPSK eye pattern clock. 288 kHz (Not used)
86	EYEI	O	Eye pattern output. I phase (Not used)
87	EYEQ	O	Eye pattern output. Q phase (Not used)
88	BTR	O	Not used
89	ELB	O	
90	C9M	O	9.216 MHz (Not used)
91	TSTIN8	I	For testing IC (Not used)
92	GND	–	Ground
93	IDST	O	Signal indicating ID start position (Not used)
94	IDCK	O	ID signal sample clock Data changes at falling edge of clock. 576 kHz (Not used)
95	IDO	O	ID data output (MSB first) (Not used)
96	WINGT	O	“L” while searching for sync signal of correction block (Not used)
97	SYST0	O	Displays lock state of sync signal of correction block (Not used)
98	SYST1	O	
99	ADST0	O	Displays continuous state of ID address of correction block (Not used)
100	ADST1	O	

5-12. IC BLOCK DIAGRAMS

IC202 AT24C02N-10SC

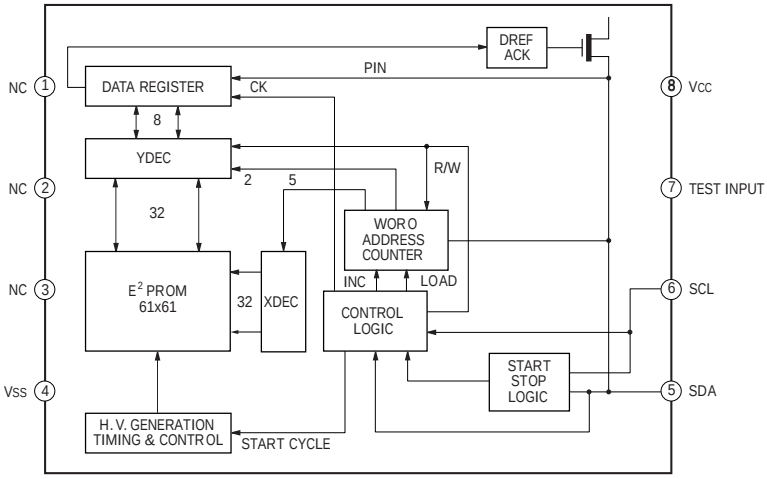

IC252 TD62C950RF

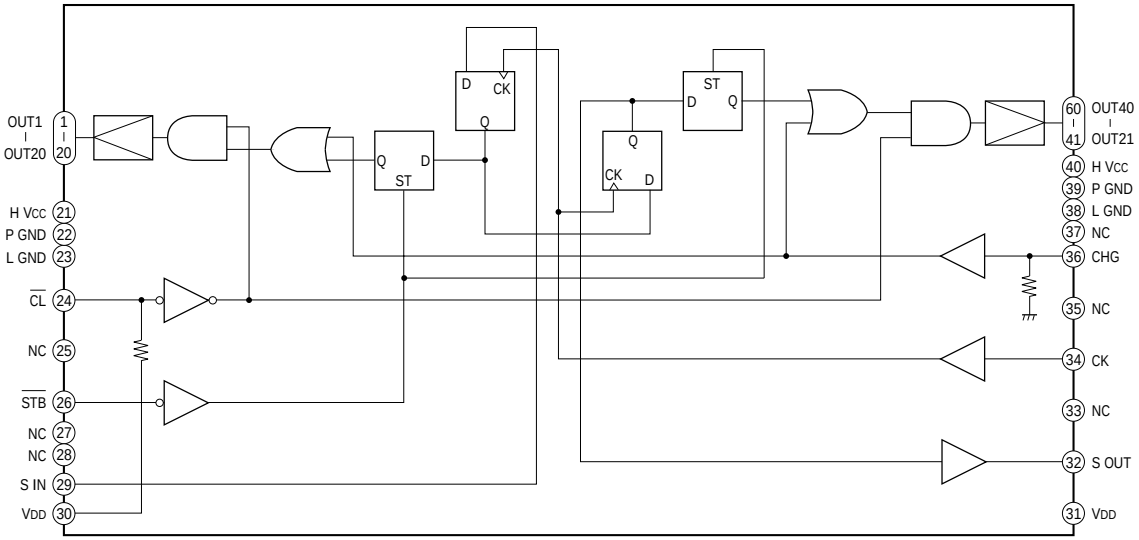

IC253 BA6208

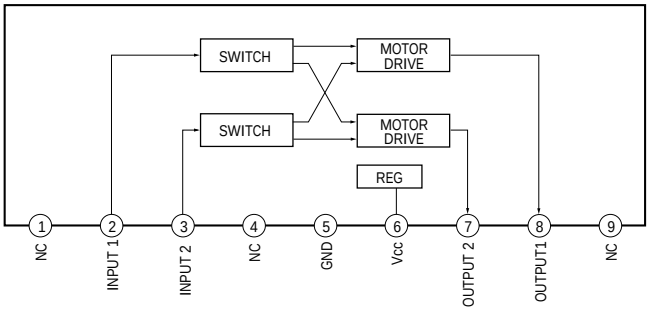

IC254, 255 TC74HC151AN

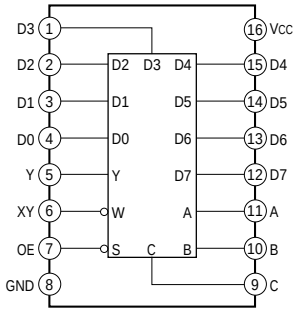

IC251 MSC1164GS-K

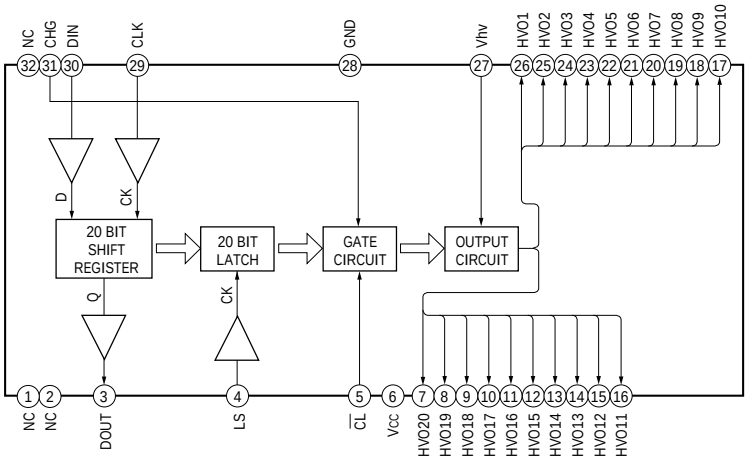

IC301 LC8905V

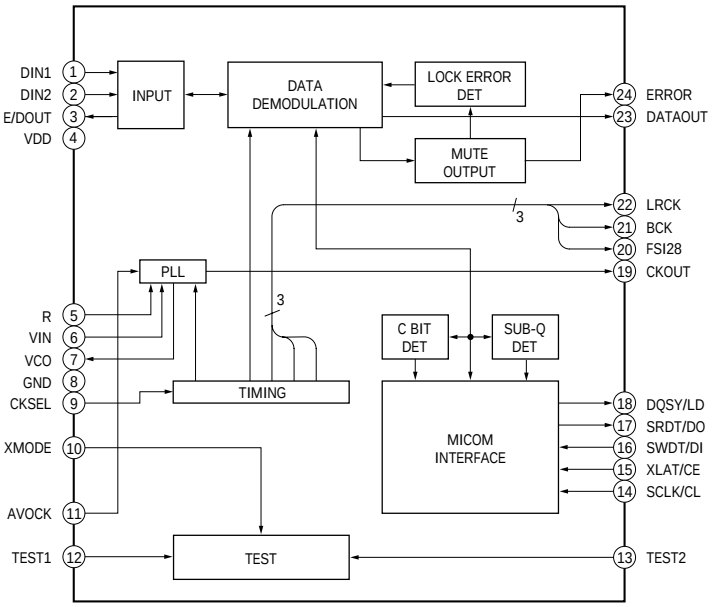

IC302 TC74HC153AF

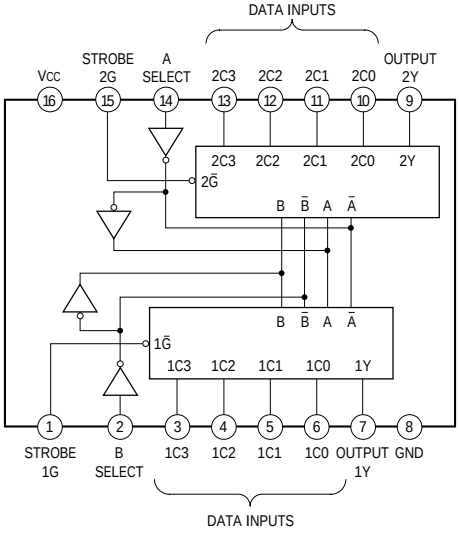

IC401, 402, 403 CXD8517Q

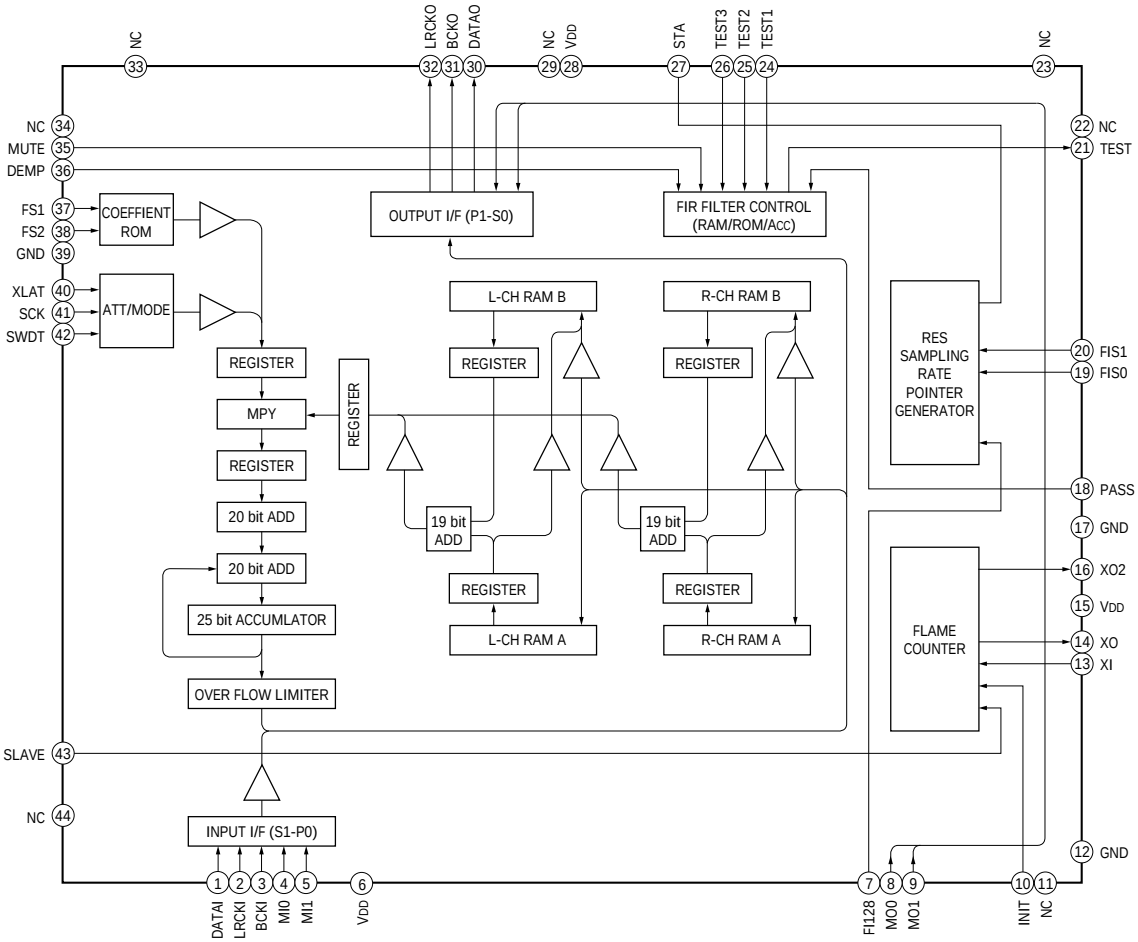

IC421 M62361FP

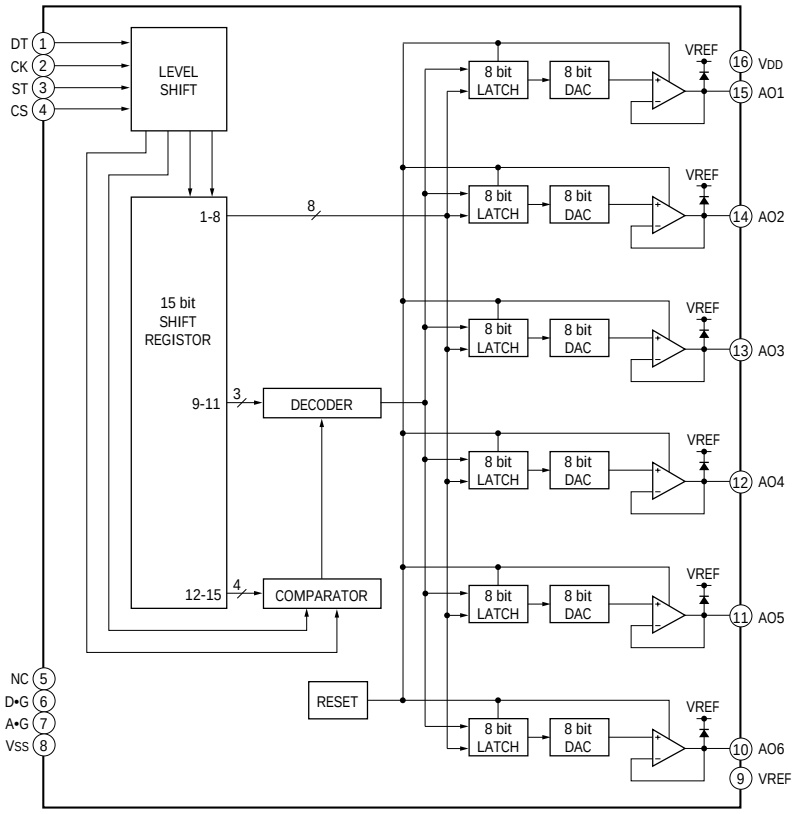

IC409-414 CXA8042AS

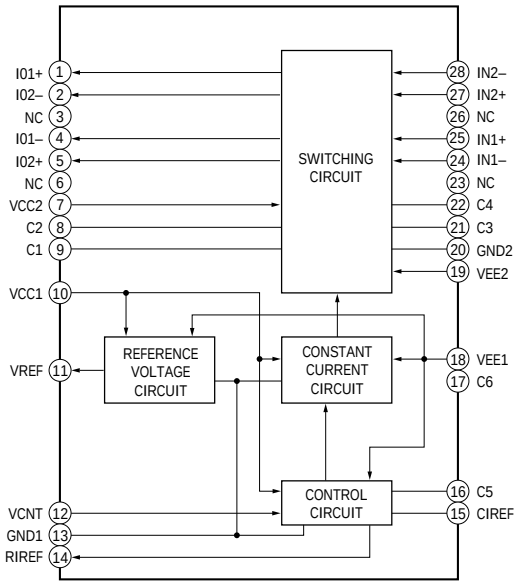

IC405, 406, 407 CXD8505BQ

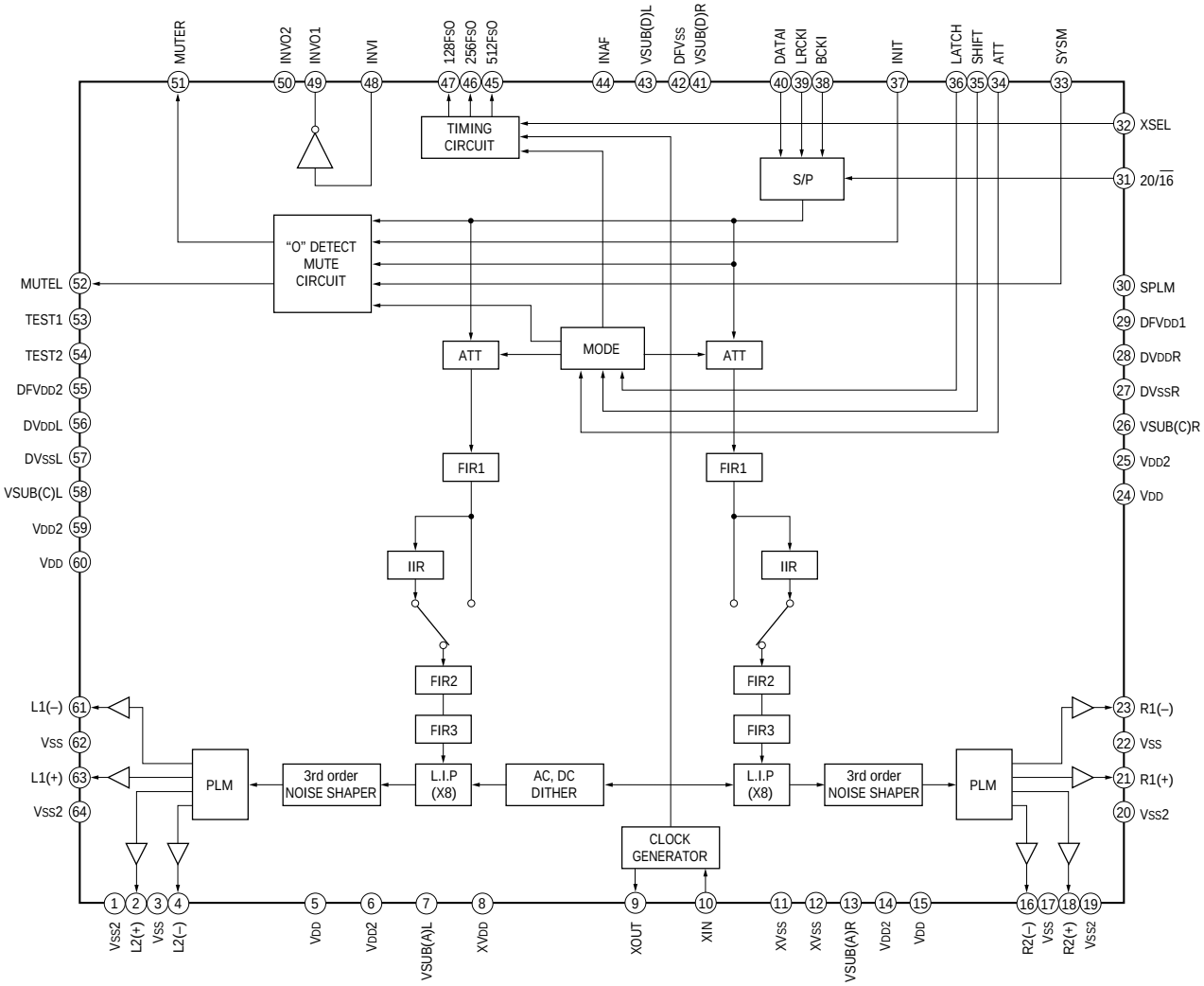

IC901 PD4606A

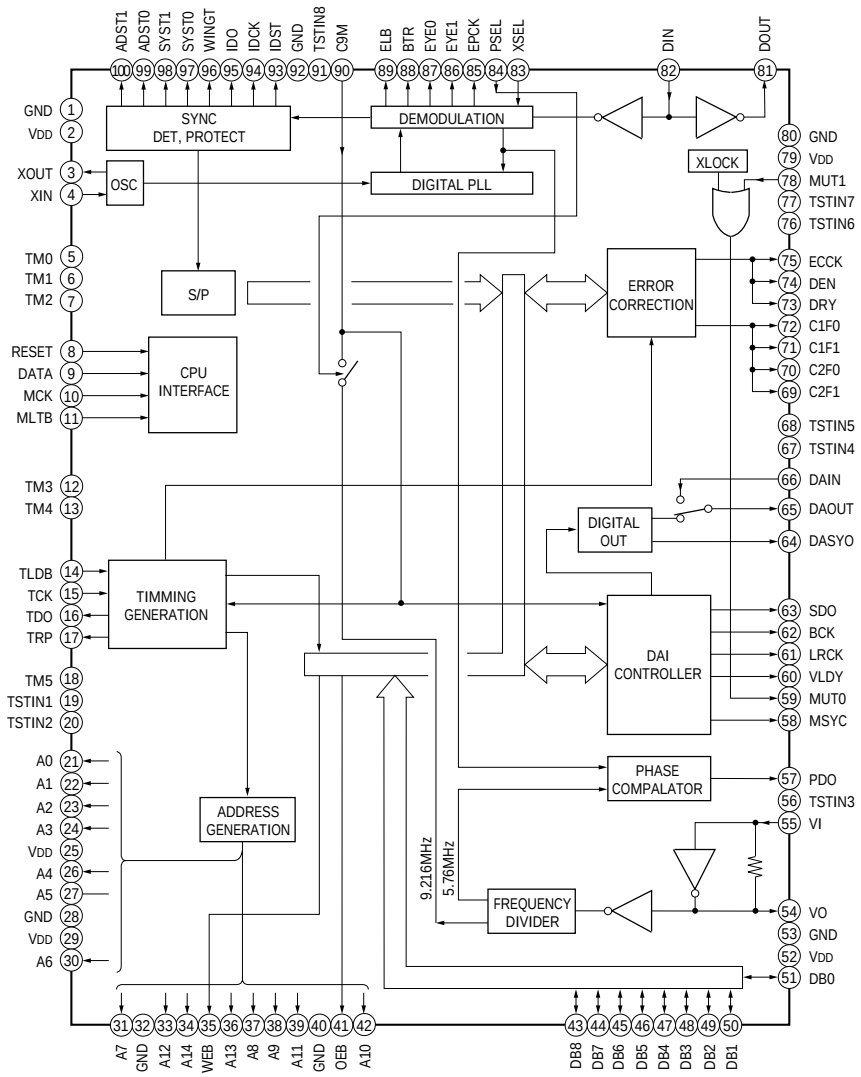

IC903 NJM360M

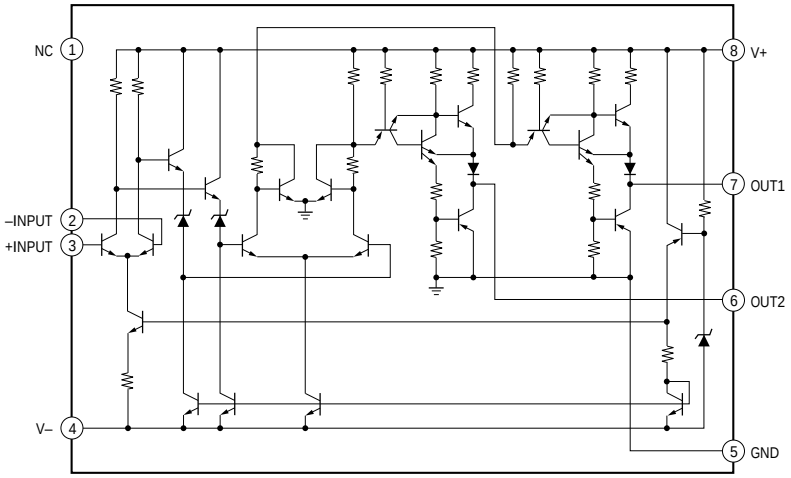

SECTION 6
EXPLODED VIEWS

NOTE:
- -XX, -X mean standardized parts, so they may have some difference from the original one.
- Items marked "*" are not stocked since they are seldom required for routine service. Some delay should be anticipated when ordering these items.
- Color Indication of Appearance Parts Example:
  KNOB, BALANCE (RED)
  ↓
  Cabinets color

- The mechanical parts with no reference number in the exploded views are not supplied.
- Hardware (# mark) list and accessories and packing materials are given in the last of this parts list.
- Abbreviation
  CND : Canadian model
  MY : Malaysia model
  SP : Singapore model
  CH : Chinese model

The components identified by mark ⚠ or dotted line with mark ⚠ are critical for safety.
Replace only with part number specified.

Les composants identifiés par une marque ⚠ sont critiques pour la sécurité. Ne les remplacer que par une piéce portant le numéro spécifié.

6-1. FRONT PANEL SECTION

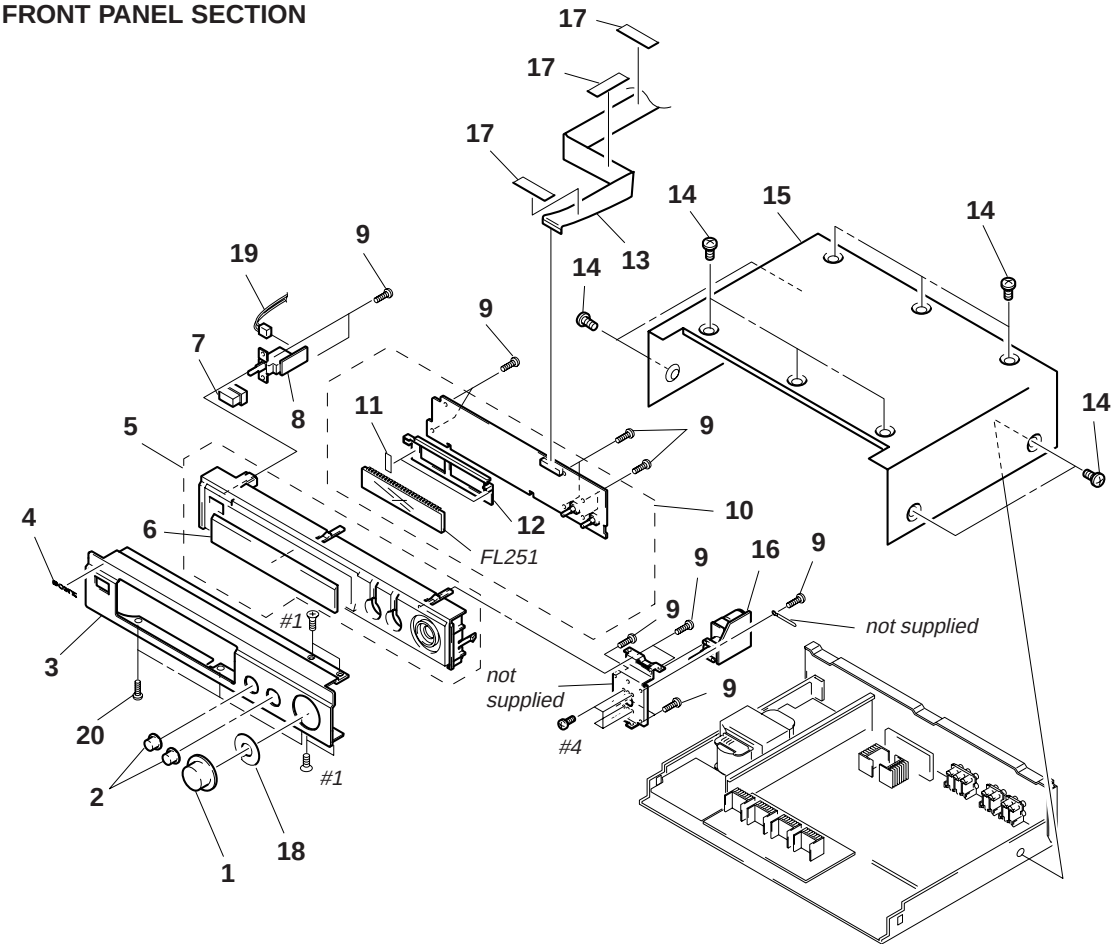

Ref. No.	Part No.	Description	Remark
1	X-4947-140-1	KNOB (R48V) ASSY (BLACK)	
1	X-4947-140-2	KNOB (R48V) ASSY (GOLD)	
2	4-987-860-02	KNOB (19)(BLACK)	
2	4-987-860-12	KNOB (19)(GOLD)	
3	4-987-858-03	PANEL, FRONT (BLACK)(EXCEPT US)	
3	4-987-858-13	PANEL, FRONT (GOLD)(EXCEPT US)	
3	4-987-858-23	PANEL, FRONT (BLACK) (US)	
4	4-942-568-01	EMBLEM (NO.5), SONY (BLACK)	
4	4-942-568-21	EMBLEM (NO.5), SONY (GOLD)	
5	X-4947-897-5	BASE ASSY (B), PANEL (BLACK)	
5	X-4947-898-5	BASE ASSY (G), PANEL (GOLD)	
6	4-987-859-02	WINDOW, INDICATION	
7	4-917-460-01	KNOB, POWER (BLACK)	
7	4-917-460-51	KNOB, POWER (GOLD)	
* 8	1-664-279-11	SW BOARD	

Ref. No.	Part No.	Description	Remark
9	4-974-510-01	SCREW (+BV 3X8 B)	
* 10	A-4392-303-A	DISPLAY BOARD, COMPLETE	
* 11	4-921-941-71	CUSHION (FL)	
* 12	4-987-862-01	HOLDER (FL TUBE)	
13	1-773-232-11	WIRE (FLAT TYPE)(25 CORE)	
14	3-704-366-01	SCREW (CASE)(M3X8)(BLACK)	
14	3-704-366-71	SCREW (CASE)(M3X8)(GOLD)	
* 15	4-974-321-51	CASE (GOLD)	
15	4-974-321-61	CASE (BLACK)	
* 16	1-664-280-61	VOL BOARD	
17	4-961-535-01	SPACER (COVER)	
* 18	4-990-677-01	COVER (GOLD)	
19	1-769-077-31	LEAD (WITH CONNECTOR)(2 CORE)	
19	1-769-078-51	LEAD (WITH CONNECTOR)(2 CORE)	
20	3-704-515-21	SCREW (BU/RING)	
FL251	1-517-645-11	INDICATOR TUBE, FLUORESCENT	

6-2. CHASSIS SECTION

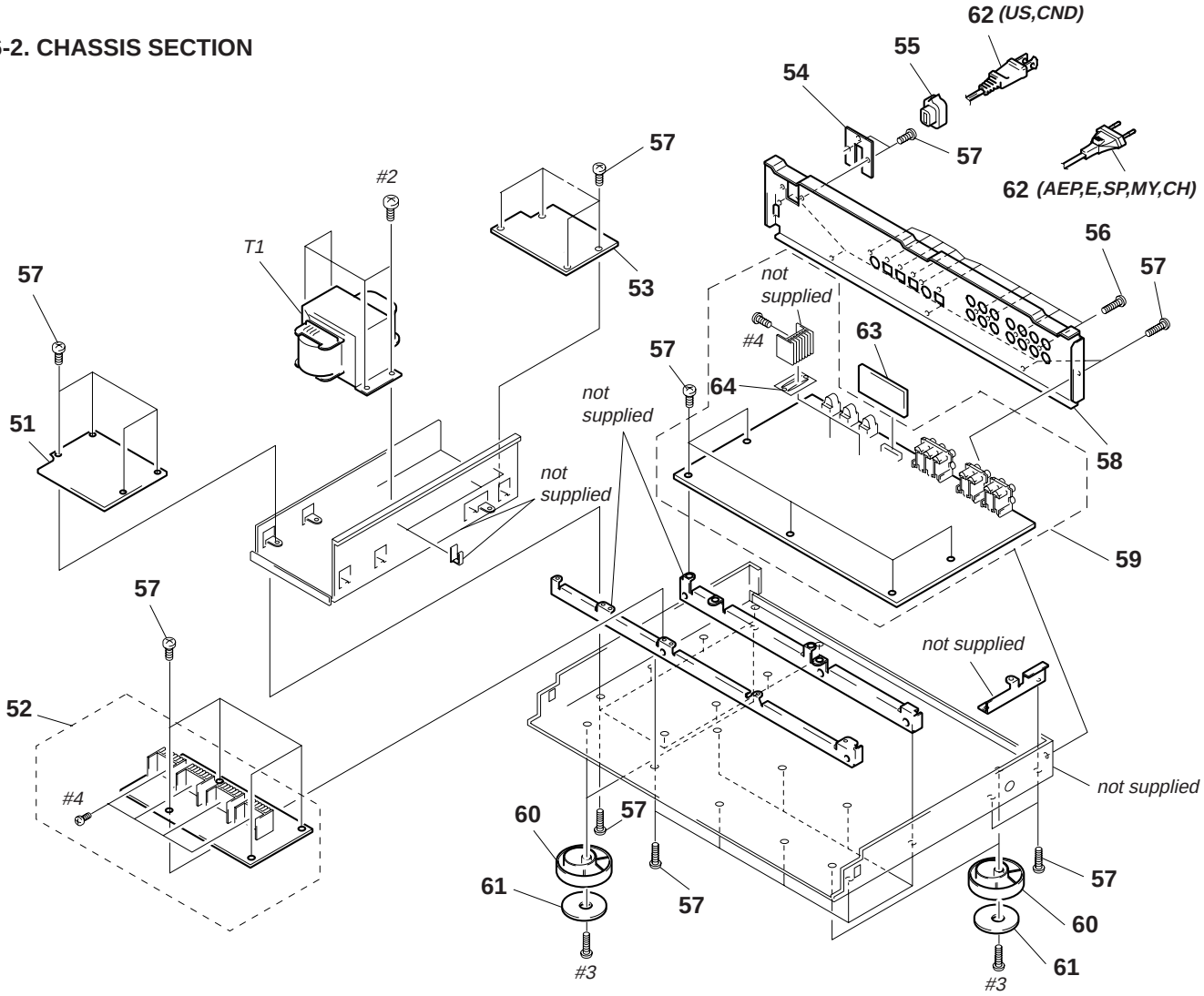

The components identified by mark ⚠ or dotted line with mark ⚠ are critical for safety. Replace only with part number specified.	Les composants identifiés par une marque ⚠ sont critiques pour la sécurité. Ne les remplacer que par une piéce portant le numéro spécifié.

Ref. No.	Part No.	Description	Remark
* 51	1-664-278-11	AC2 BOARD	
* 52	A-4398-191-A	PS BOARD, COMPLETE (US,CND)	
* 52	A-4398-192-A	PS BOARD, COMPLETE (AEP,E,MY,SP,CH)	
* 53	1-664-277-11	AC1 BOARD	
* 54	4-923-873-01	BRACKET, CORD STOPPER	
* 55	3-703-244-00	BUSHING (2104), CORD (AEP,E,MY,SP,CH)	
55	4-916-783-01	BUSHING, CORD (US,CND)	
56	3-704-515-41	SCREW (BV/RING)	
57	4-974-510-01	SCREW (+BV 3X8 B)	
* 58	4-987-861-13	PANEL, BACK (US)	
* 58	4-987-861-23	PANEL, BACK (CND)	
* 58	4-987-861-33	PANEL, BACK (AEP)	

Ref. No.	Part No.	Description	Remark
* 58	4-987-861-43	PANEL, BACK (E,MY,SP,CH)	
* 59	A-4392-301-A	MAIN BOARD, COMPLETE	
60	4-970-123-01	FOOT (F50180S)	
61	4-970-124-01	CUSHION (F50180S)	
⚠62	1-559-479-11	CORD, POWER (US,CND)	
⚠62	1-776-095-11	CORD, POWER (AEP,E,MY,SP,CH)	
* 63	A-4398-190-A	TR BOARD	
64	4-989-736-01	SPACER	
⚠T1	1-431-188-11	TRANSFORMER, POWER (US,CND)	
⚠T1	1-431-189-11	TRANSFORMER, POWER (E,MY,SP,CH)	
⚠T1	1-431-190-11	TRANSFORMER, POWER (AEP)	

SECTION 7
ELECTRICAL PARTS LIST

AC1 **AC2** **DISPLAY**

Note:

The components identified by mark ⚠ or dotted line with mark ⚠ are critical for safety.
Replace only with part number specified.

Les composants identifiés par une marque ⚠ sont critiques pour la sécurité. Ne les remplacer que par une piéce portant le numéro spécifié.

When indicating parts by reference number, please include the board name.

- Due to standardization, replacements in the parts list may be different from the parts specified in the diagrams or the components used on the set.
- -XX, -X mean standardized parts, so they may have some difference from the original one.
- Items marked "*" are not stocked since they are seldom required for routine service. Some delay should be anticipated when ordering these items.
- RESISTORS
  All resistors are in ohms
  METAL: Metal-film resistor
  METAL OXIDE: Metal Oxide-film resistor
  F : nonflammable
- SEMICONDUCTORS
  In each case, u: µ , for example:
  uA...: µ A..., uPA...: µ PA..., uPB...: µ PB..., uPC...: µ PC..., uPD...: µ PD...
- CAPACITORS
  uF : µ F
- COILS
  uH : µ H
- Abbreviation
  CND : Canadian model
  MY : Malaysia model
  SP : Singapore model
  CH : Chinese model

Ref. No.	Part No.	Description			Remark
*	1-664-277-11	AC1 BOARD **********			
		< CAPACITOR >			
⚠ C1	1-115-383-11	CERAMIC	0.001uF	10%	125V
		< CONNECTOR >			
CN1	1-564-321-00	PIN, CONNECTOR 2P			
* CN2	1-565-792-11	PIN, CONNECTOR 2P			
CN3	1-564-321-00	PIN, CONNECTOR 2P (US,CND,AEP)			
* CN3	1-564-687-11	PIN, CONNECTOR 3P (E,MY,SP,CH)			
		< FUSE >			
⚠ F1	1-532-389-51	FUSE, TIME-LAG (500mA/250V)(AEP,E,MY,SP,CH)			
⚠ F1	1-576-102-11	FUSE (1.5A/250V)(US,CND)			
⚠ F2	1-532-501-51	FUSE, TIME-LAG (800mA/250V)(E,MY,SP,CH)			
		< FUSE HOLDER >			
FH1	1-533-293-11	FUSE HOLDER			
FH2	1-533-293-11	FUSE HOLDER (E,MY,SP,CH)			
FH3	1-533-293-11	FUSE HOLDER			
FH4	1-533-293-11	FUSE HOLDER (E,MY,SP,CH)			
		< COIL >			
⚠ L1	1-421-915-11	COIL, LINE FILTER			
		< SWITCH >			
⚠ S4	1-762-753-11	SWITCH, VOLTAGE SELECTION (VOLTAGE SELECTOR)(E,MY,SP,CH)			
**********					
*	1-664-278-11	AC2 BOARD **********			
		< BUS BAR >			
BB101	1-560-242-11	BUS BAR			
		< CAPACITOR >			
C102	1-126-057-11	ELECT	2200uF	20%	50V
C103	1-126-057-11	ELECT	2200uF	20%	50V
C109	1-117-783-11	ELECT	13000uF	20%	16V
C110	1-126-013-11	ELECT	1000uF	20%	16V
C115	1-136-165-00	FILM	0.1uF	5%	50V
C116	1-128-555-11	ELECT	470uF	20%	63V
C123	1-162-294-31	CERAMIC	0.001uF	10%	50V
C124	1-164-159-11	CERAMIC	0.1uF		50V
C125	1-164-159-11	CERAMIC	0.1uF		50V
C126	1-164-159-11	CERAMIC	0.1uF		50V
C127	1-164-159-11	CERAMIC	0.1uF		50V
C128	1-162-294-31	CERAMIC	0.001uF	10%	50V
C129	1-162-294-31	CERAMIC	0.001uF	10%	50V
C130	1-162-294-31	CERAMIC	0.001uF	10%	50V
C131	1-164-159-11	CERAMIC	0.1uF		50V
C132	1-164-159-11	CERAMIC	0.1uF		50V
		< CONNECTOR >			
* CN305	1-564-242-00	PIN, CONNECTOR 5P			
* CN306	1-564-243-11	PIN, CONNECTOR 6P			
		< DIODE >			
D101	8-719-302-37	DIODE RBV-602			
D112	8-719-302-37	DIODE RBV-602			
D113	8-719-987-63	DIODE 1N4148M			
D114	8-719-987-63	DIODE 1N4148M			
D115	8-719-024-99	DIODE 11ES2-NTA2B			
D116	8-719-024-99	DIODE 11ES2-NTA2B			
D117	8-719-024-99	DIODE 11ES2-NTA2B			
D118	8-719-024-99	DIODE 11ES2-NTA2B			
		< EARTH >			
* E1	1-537-738-21	TERMINAL, EARTH			
* E2	1-537-738-21	TERMINAL, EARTH			
**********					
*	A-4392-303-A	DISPLAY BOARD, COMPLETE **********			
*	4-921-941-71	CUSHION (FL)			
*	4-987-862-01	HOLDER (FL TUBE)			
		< CAPACITOR >			
C251	1-126-964-11	ELECT	10uF	20%	50V
C252	1-164-159-11	CERAMIC	0.1uF		50V
C253	1-164-159-11	CERAMIC	0.1uF		50V

DISPLAY MAIN

Ref. No.	Part No.	Description			Remark
C254	1-126-964-11	ELECT	10uF	20%	50V
C255	1-126-964-11	ELECT	10uF	20%	50V
C257	1-164-159-11	CERAMIC	0.1uF		50V
C258	1-164-159-11	CERAMIC	0.1uF		50V
		< CONNECTOR >			
* CN107	1-564-523-11	PLUG, CONNECTOR 8P			
* CN206	1-568-867-11	SOCKET, CONNECTOR 25P			
		< DIODE >			
D251	8-719-987-63	DIODE 1N4148M			
D252	8-719-987-63	DIODE 1N4148M			
D253	8-719-987-63	DIODE 1N4148M			
D254	8-719-933-39	DIODE HZS6C1L			
D255	8-719-024-99	DIODE 11ES2-NTA2B			
D257	8-719-987-63	DIODE 1N4148M			
D258	8-719-987-63	DIODE 1N4148M			
		< FLUORESCENT INDICATOR >			
FL251	1-517-645-11	INDICATOR TUBE, FLUORESCENT			
		< IC >			
IC251	8-759-999-53	IC MSC1164GS-K			
IC252	8-759-075-35	IC TD62C950RF			
IC253	8-759-962-08	IC BA6208			
IC254	8-759-916-48	IC SN74HC151AN			
IC255	8-759-916-48	IC SN74HC151AN			
IC256	8-759-373-49	IC NJL54H400			
		< TRANSISTOR >			
Q251	8-729-900-63	TRANSISTOR DTA124ES			
		< RESISTOR >			
R251	1-249-429-11	CARBON	10K	5%	1/4W
R252	1-249-429-11	CARBON	10K	5%	1/4W
R253	1-249-429-11	CARBON	10K	5%	1/4W
R254	1-249-429-11	CARBON	10K	5%	1/4W
R255	1-249-429-11	CARBON	10K	5%	1/4W
R256	1-249-429-11	CARBON	10K	5%	1/4W
R257	1-249-429-11	CARBON	10K	5%	1/4W
R258	1-249-429-11	CARBON	10K	5%	1/4W
R259	1-249-429-11	CARBON	10K	5%	1/4W
R260	1-249-429-11	CARBON	10K	5%	1/4W
R261	1-249-429-11	CARBON	10K	5%	1/4W
R262	1-249-429-11	CARBON	10K	5%	1/4W
R263	1-249-429-11	CARBON	10K	5%	1/4W
R264	1-249-429-11	CARBON	10K	5%	1/4W
R265	1-249-429-11	CARBON	10K	5%	1/4W
R266	1-249-429-11	CARBON	10K	5%	1/4W
R267	1-249-429-11	CARBON	10K	5%	1/4W

Ref. No.	Part No.	Description			Remark
R268	1-247-807-31	CARBON	100	5%	1/4W
R269	1-247-807-31	CARBON	100	5%	1/4W
R270	1-247-807-31	CARBON	100	5%	1/4W
R271	1-247-807-31	CARBON	100	5%	1/4W
R272	1-260-103-11	CARBON	2.2K	5%	1/2W
R273	1-249-425-11	CARBON	4.7K	5%	1/4W F
R274	1-249-425-11	CARBON	4.7K	5%	1/4W F
R275	1-249-413-11	CARBON	470	5%	1/4W F
R276	1-260-070-11	CARBON	3.3	5%	1/2W
R277	1-249-429-11	CARBON	10K	5%	1/4W
R278	1-249-429-11	CARBON	10K	5%	1/4W
R279	1-249-429-11	CARBON	10K	5%	1/4W
R280	1-260-070-11	CARBON	3.3	5%	1/2W
		< SWITCH >			
S2	1-475-074-11	ENCODER, ROTARY (WITH SW) (MENU, PUSH ENTER)			
S3	1-475-075-11	ENCODER, ROTARY (+/-)			
S251	1-554-303-21	SWITCH, TACTILE (AC-3 RF)			
S252	1-554-303-21	SWITCH, TACTILE (DIGITAL 1)			
S253	1-554-303-21	SWITCH, TACTILE (DIGITAL 2)			
S254	1-554-303-21	SWITCH, TACTILE (DIGITAL 3)			
S255	1-554-303-21	SWITCH, TACTILE (BASS BOOST)			
S256	1-554-303-21	SWITCH, TACTILE (DOLBY SURR)			
S257	1-554-303-21	SWITCH, TACTILE (MODE)			
S258	1-554-303-21	SWITCH, TACTILE (OFF)			
S259	1-554-303-21	SWITCH, TACTILE (DIGITAL 4 COAXIAL)			
S260	1-554-303-21	SWITCH, TACTILE (SET UP)			
S261	1-554-303-21	SWITCH, TACTILE (BYPASS)			

****

*	A-4392-301-A	MAIN BOARD, COMPLETE **********			
	7-682-548-09	SCREW (3X8)			
	4-989-736-01	SPACER			
		< CAPACITOR >			
C151	1-124-557-11	ELECT	1000uF	20%	25V
C152	1-124-557-11	ELECT	1000uF	20%	25V
C153	1-124-563-11	ELECT	2200uF	20%	25V
C154	1-124-563-11	ELECT	2200uF	20%	25V
C155	1-124-563-11	ELECT	2200uF	20%	25V
C201	1-165-319-11	CERAMIC CHIP	0.1uF		50V
C202	1-126-049-11	ELECT	22uF	20%	50V
C203	1-163-275-11	CERAMIC CHIP	0.001uF	5%	50V
C204	1-165-319-11	CERAMIC CHIP	0.1uF		50V
C205	1-165-319-11	CERAMIC CHIP	0.1uF		50V
C206	1-165-319-11	CERAMIC CHIP	0.1uF		50V
C207	1-163-235-11	CERAMIC CHIP	22PF	5%	50V
C208	1-163-235-11	CERAMIC CHIP	22PF	5%	50V
C209	1-163-275-11	CERAMIC CHIP	0.001uF	5%	50V
C210	1-165-319-11	CERAMIC CHIP	0.1uF		50V

Ref. No.	Part No.	Description			Remark
C211	1-165-319-11	CERAMIC CHIP	0.1uF		50V
C212	1-165-319-11	CERAMIC CHIP	0.1uF		50V
C301	1-163-251-11	CERAMIC CHIP	100PF	5%	50V
C302	1-165-319-11	CERAMIC CHIP	0.1uF		50V
C303	1-165-319-11	CERAMIC CHIP	0.1uF		50V
C304	1-163-023-00	CERAMIC CHIP	0.015uF	5%	50V
C305	1-163-275-11	CERAMIC CHIP	0.001uF	5%	50V
C307	1-165-319-11	CERAMIC CHIP	0.1uF		50V
C308	1-165-319-11	CERAMIC CHIP	0.1uF		50V
C309	1-165-319-11	CERAMIC CHIP	0.1uF		50V
C310	1-165-319-11	CERAMIC CHIP	0.1uF		50V
C316	1-165-319-11	CERAMIC CHIP	0.1uF		50V
C317	1-165-319-11	CERAMIC CHIP	0.1uF		50V
C401	1-165-319-11	CERAMIC CHIP	0.1uF		50V
C402	1-163-251-11	CERAMIC CHIP	100PF	5%	50V
C403	1-165-319-11	CERAMIC CHIP	0.1uF		50V
C404	1-165-319-11	CERAMIC CHIP	0.1uF		50V
C405	1-165-319-11	CERAMIC CHIP	0.1uF		50V
C406	1-163-251-11	CERAMIC CHIP	100PF	5%	50V
C407	1-165-319-11	CERAMIC CHIP	0.1uF		50V
C408	1-165-319-11	CERAMIC CHIP	0.1uF		50V
C409	1-165-319-11	CERAMIC CHIP	0.1uF		50V
C410	1-163-251-11	CERAMIC CHIP	100PF	5%	50V
C411	1-165-319-11	CERAMIC CHIP	0.1uF		50V
C412	1-165-319-11	CERAMIC CHIP	0.1uF		50V
C413	1-165-319-11	CERAMIC CHIP	0.1uF		50V
C414	1-165-319-11	CERAMIC CHIP	0.1uF		50V
C415	1-165-319-11	CERAMIC CHIP	0.1uF		50V
C416	1-163-251-11	CERAMIC CHIP	100PF	5%	50V
C417	1-163-251-11	CERAMIC CHIP	100PF	5%	50V
C418	1-165-319-11	CERAMIC CHIP	0.1uF		50V
C419	1-165-319-11	CERAMIC CHIP	0.1uF		50V
C420	1-165-319-11	CERAMIC CHIP	0.1uF		50V
C421	1-165-319-11	CERAMIC CHIP	0.1uF		50V
C422	1-165-319-11	CERAMIC CHIP	0.1uF		50V
C423	1-165-319-11	CERAMIC CHIP	0.1uF		50V
C424	1-165-319-11	CERAMIC CHIP	0.1uF		50V
C425	1-163-251-11	CERAMIC CHIP	100PF	5%	50V
C426	1-163-251-11	CERAMIC CHIP	100PF	5%	50V
C427	1-165-319-11	CERAMIC CHIP	0.1uF		50V
C428	1-165-319-11	CERAMIC CHIP	0.1uF		50V
C429	1-165-319-11	CERAMIC CHIP	0.1uF		50V
C430	1-165-319-11	CERAMIC CHIP	0.1uF		50V
C431	1-165-319-11	CERAMIC CHIP	0.1uF		50V
C432	1-165-319-11	CERAMIC CHIP	0.1uF		50V
C433	1-165-319-11	CERAMIC CHIP	0.1uF		50V
C434	1-163-251-11	CERAMIC CHIP	100PF	5%	50V
C435	1-163-251-11	CERAMIC CHIP	100PF	5%	50V
C436	1-165-319-11	CERAMIC CHIP	0.1uF		50V
C437	1-165-319-11	CERAMIC CHIP	0.1uF		50V
C438	1-165-319-11	CERAMIC CHIP	0.1uF		50V
C439	1-165-319-11	CERAMIC CHIP	0.1uF		50V

Ref. No.	Part No.	Description			Remark
C440	1-165-319-11	CERAMIC CHIP	0.1uF		50V
C441	1-126-023-11	ELECT	100uF	20%	25V
C445	1-165-319-11	CERAMIC CHIP	0.1uF		50V
C446	1-165-319-11	CERAMIC CHIP	0.1uF		50V
C447	1-165-319-11	CERAMIC CHIP	0.1uF		50V
C448	1-136-157-00	FILM	0.022uF	5%	50V
C449	1-165-319-11	CERAMIC CHIP	0.1uF		50V
C450	1-165-319-11	CERAMIC CHIP	0.1uF		50V
C451	1-165-319-11	CERAMIC CHIP	0.1uF		50V
C452	1-126-049-11	ELECT	22uF	20%	50V
C453	1-126-023-11	ELECT	100uF	20%	25V
C454	1-126-049-11	ELECT	22uF	20%	50V
C455	1-136-165-00	FILM	0.1uF	5%	50V
C456	1-126-049-11	ELECT	22uF	20%	50V
C457	1-165-319-11	CERAMIC CHIP	0.1uF		50V
C458	1-165-319-11	CERAMIC CHIP	0.1uF		50V
C459	1-136-157-00	FILM	0.022uF	5%	50V
C460	1-165-319-11	CERAMIC CHIP	0.1uF		50V
C461	1-165-319-11	CERAMIC CHIP	0.1uF		50V
C462	1-165-319-11	CERAMIC CHIP	0.1uF		50V
C463	1-126-049-11	ELECT	22uF	20%	50V
C464	1-126-023-11	ELECT	100uF	20%	25V
C465	1-126-049-11	ELECT	22uF	20%	50V
C466	1-136-165-00	FILM	0.1uF	5%	50V
C467	1-126-049-11	ELECT	22uF	20%	50V
C468	1-165-319-11	CERAMIC CHIP	0.1uF		50V
C469	1-165-319-11	CERAMIC CHIP	0.1uF		50V
C470	1-136-157-00	FILM	0.022uF	5%	50V
C471	1-165-319-11	CERAMIC CHIP	0.1uF		50V
C472	1-165-319-11	CERAMIC CHIP	0.1uF		50V
C473	1-165-319-11	CERAMIC CHIP	0.1uF		50V
C474	1-126-049-11	ELECT	22uF	20%	50V
C475	1-126-023-11	ELECT	100uF	20%	25V
C476	1-126-049-11	ELECT	22uF	20%	50V
C477	1-136-165-00	FILM	0.1uF	5%	50V
C478	1-126-049-11	ELECT	22uF	20%	50V
C479	1-165-319-11	CERAMIC CHIP	0.1uF		50V
C480	1-165-319-11	CERAMIC CHIP	0.1uF		50V
C481	1-136-157-00	FILM	0.022uF	5%	50V
C482	1-165-319-11	CERAMIC CHIP	0.1uF		50V
C483	1-165-319-11	CERAMIC CHIP	0.1uF		50V
C484	1-165-319-11	CERAMIC CHIP	0.1uF		50V
C485	1-126-049-11	ELECT	22uF	20%	50V
C486	1-126-023-11	ELECT	100uF	20%	25V
C487	1-126-049-11	ELECT	22uF	20%	50V
C488	1-136-165-00	FILM	0.1uF	5%	50V
C489	1-126-049-11	ELECT	22uF	20%	50V
C490	1-165-319-11	CERAMIC CHIP	0.1uF		50V
C491	1-165-319-11	CERAMIC CHIP	0.1uF		50V
C492	1-136-157-00	FILM	0.022uF	5%	50V
C493	1-165-319-11	CERAMIC CHIP	0.1uF		50V
C494	1-165-319-11	CERAMIC CHIP	0.1uF		50V

MAIN

Ref. No.	Part No.	Description			Remark
C495	1-165-319-11	CERAMIC CHIP	0.1uF		50V
C496	1-126-049-11	ELECT	22uF	20%	50V
C497	1-126-023-11	ELECT	100uF	20%	25V
C498	1-126-049-11	ELECT	22uF	20%	50V
C499	1-136-165-00	FILM	0.1uF	5%	50V
C500	1-126-049-11	ELECT	22uF	20%	50V
C501	1-165-319-11	CERAMIC CHIP	0.1uF		50V
C502	1-165-319-11	CERAMIC CHIP	0.1uF		50V
C503	1-136-157-00	FILM	0.022uF	5%	50V
C504	1-165-319-11	CERAMIC CHIP	0.1uF		50V
C505	1-165-319-11	CERAMIC CHIP	0.1uF		50V
C506	1-165-319-11	CERAMIC CHIP	0.1uF		50V
C507	1-126-049-11	ELECT	22uF	20%	50V
C508	1-126-023-11	ELECT	100uF	20%	25V
C509	1-126-049-11	ELECT	22uF	20%	50V
C510	1-136-165-00	FILM	0.1uF	5%	50V
C511	1-126-049-11	ELECT	22uF	20%	50V
C512	1-165-319-11	CERAMIC CHIP	0.1uF		50V
C513	1-165-319-11	CERAMIC CHIP	0.1uF		50V
C514	1-136-154-00	FILM	0.012uF	5%	50V
C515	1-136-157-00	FILM	0.022uF	5%	50V
C516	1-136-154-00	FILM	0.012uF	5%	50V
C517	1-130-481-00	MYLAR	0.0068uF	5%	50V
C518	1-130-481-00	MYLAR	0.0068uF	5%	50V
C519	1-136-154-00	FILM	0.012uF	5%	50V
C520	1-136-157-00	FILM	0.022uF	5%	50V
C521	1-136-154-00	FILM	0.012uF	5%	50V
C522	1-130-481-00	MYLAR	0.0068uF	5%	50V
C523	1-130-481-00	MYLAR	0.0068uF	5%	50V
C524	1-136-154-00	FILM	0.012uF	5%	50V
C525	1-136-157-00	FILM	0.022uF	5%	50V
C526	1-136-154-00	FILM	0.012uF	5%	50V
C527	1-130-481-00	MYLAR	0.0068uF	5%	50V
C528	1-130-481-00	MYLAR	0.0068uF	5%	50V
C529	1-136-154-00	FILM	0.012uF	5%	50V
C530	1-136-157-00	FILM	0.022uF	5%	50V
C531	1-136-154-00	FILM	0.012uF	5%	50V
C532	1-130-481-00	MYLAR	0.0068uF	5%	50V
C533	1-130-481-00	MYLAR	0.0068uF	5%	50V
C534	1-136-154-00	FILM	0.012uF	5%	50V
C535	1-136-157-00	FILM	0.022uF	5%	50V
C536	1-136-154-00	FILM	0.012uF	5%	50V
C537	1-130-481-00	MYLAR	0.0068uF	5%	50V
C538	1-130-481-00	MYLAR	0.0068uF	5%	50V
C539	1-136-154-00	FILM	0.012uF	5%	50V
C540	1-136-157-00	FILM	0.022uF	5%	50V
C541	1-136-154-00	FILM	0.012uF	5%	50V
C542	1-130-481-00	MYLAR	0.0068uF	5%	50V
C543	1-130-481-00	MYLAR	0.0068uF	5%	50V
C544	1-126-023-11	ELECT	100uF	20%	25V
C545	1-165-319-11	CERAMIC CHIP	0.1uF		50V

Ref. No.	Part No.	Description			Remark
C546	1-163-251-11	CERAMIC CHIP	100PF	5%	50V
C547	1-165-319-11	CERAMIC CHIP	0.1uF		50V
C548	1-163-275-11	CERAMIC CHIP	0.001uF	5%	50V
C549	1-165-319-11	CERAMIC CHIP	0.1uF		50V
C550	1-165-319-11	CERAMIC CHIP	0.1uF		50V
C551	1-126-049-11	ELECT	22uF	20%	50V
C552	1-164-232-11	CERAMIC CHIP	0.01uF		50V
C553	1-165-319-11	CERAMIC CHIP	0.1uF		50V
C554	1-165-319-11	CERAMIC CHIP	0.1uF		50V
C555	1-165-319-11	CERAMIC CHIP	0.1uF		50V
C556	1-165-319-11	CERAMIC CHIP	0.1uF		50V
C557	1-163-275-11	CERAMIC CHIP	0.001uF	5%	50V
C558	1-165-319-11	CERAMIC CHIP	0.1uF		50V
C559	1-126-049-11	ELECT	22uF	20%	50V
C560	1-164-232-11	CERAMIC CHIP	0.01uF		50V
C561	1-165-319-11	CERAMIC CHIP	0.1uF		50V
C562	1-165-319-11	CERAMIC CHIP	0.1uF		50V
C563	1-165-319-11	CERAMIC CHIP	0.1uF		50V
C564	1-165-319-11	CERAMIC CHIP	0.1uF		50V
C565	1-165-319-11	CERAMIC CHIP	0.1uF		50V
C566	1-165-319-11	CERAMIC CHIP	0.1uF		50V
C567	1-165-319-11	CERAMIC CHIP	0.1uF		50V
C568	1-165-319-11	CERAMIC CHIP	0.1uF		50V
C569	1-165-319-11	CERAMIC CHIP	0.1uF		50V
C570	1-165-319-11	CERAMIC CHIP	0.1uF		50V
C571	1-165-319-11	CERAMIC CHIP	0.1uF		50V
C572	1-163-093-00	CERAMIC CHIP	10PF	5%	50V
C573	1-163-093-00	CERAMIC CHIP	10PF	5%	50V
C574	1-165-319-11	CERAMIC CHIP	0.1uF		50V
C575	1-165-319-11	CERAMIC CHIP	0.1uF		50V
C576	1-165-319-11	CERAMIC CHIP	0.1uF		50V
C577	1-165-319-11	CERAMIC CHIP	0.1uF		50V
C578	1-165-319-11	CERAMIC CHIP	0.1uF		50V
C579	1-165-319-11	CERAMIC CHIP	0.1uF		50V
C601	1-110-339-11	MYLAR	220PF	5%	50V
C602	1-110-339-11	MYLAR	220PF	5%	50V
C603	1-136-165-00	FILM	0.1uF	5%	50V
C604	1-136-165-00	FILM	0.1uF	5%	50V
C605	1-130-469-00	MYLAR	680PF	5%	50V
C606	1-130-477-00	MYLAR	0.0033uF	5%	50V
C607	1-110-339-11	MYLAR	220PF	5%	50V
C608	1-110-339-11	MYLAR	220PF	5%	50V
C609	1-136-165-00	FILM	0.1uF	5%	50V
C610	1-136-165-00	FILM	0.1uF	5%	50V
C611	1-130-469-00	MYLAR	680PF	5%	50V
C612	1-130-477-00	MYLAR	0.0033uF	5%	50V
C613	1-110-339-11	MYLAR	220PF	5%	50V
C614	1-110-339-11	MYLAR	220PF	5%	50V
C615	1-136-165-00	FILM	0.1uF	5%	50V
C616	1-136-165-00	FILM	0.1uF	5%	50V
C617	1-130-469-00	MYLAR	680PF	5%	50V
C618	1-130-477-00	MYLAR	0.0033uF	5%	50V

Ref. No.	Part No.	Description			Remark
C619	1-110-339-11	MYLAR	220PF	5%	50V
C620	1-110-339-11	MYLAR	220PF	5%	50V
C621	1-136-165-00	FILM	0.1uF	5%	50V
C622	1-136-165-00	FILM	0.1uF	5%	50V
C623	1-130-469-00	MYLAR	680PF	5%	50V
C624	1-130-477-00	MYLAR	0.0033uF	5%	50V
C625	1-110-339-11	MYLAR	220PF	5%	50V
C626	1-110-339-11	MYLAR	220PF	5%	50V
C627	1-136-165-00	FILM	0.1uF	5%	50V
C628	1-136-165-00	FILM	0.1uF	5%	50V
C629	1-130-469-00	MYLAR	680PF	5%	50V
C630	1-130-477-00	MYLAR	0.0033uF	5%	50V
C631	1-110-339-11	MYLAR	220PF	5%	50V
C632	1-110-339-11	MYLAR	220PF	5%	50V
C633	1-136-165-00	FILM	0.1uF	5%	50V
C634	1-136-165-00	FILM	0.1uF	5%	50V
C635	1-130-469-00	MYLAR	680PF	5%	50V
C636	1-130-477-00	MYLAR	0.0033uF	5%	50V
C637	1-110-339-11	MYLAR	220PF	5%	50V
C638	1-102-947-00	CERAMIC	10PF	5%	50V
C639	1-126-049-11	ELECT	22uF	20%	50V
C640	1-126-049-11	ELECT	22uF	20%	50V
C641	1-110-339-11	MYLAR	220PF	5%	50V
C642	1-102-947-00	CERAMIC	10PF	5%	50V
C643	1-126-049-11	ELECT	22uF	20%	50V
C644	1-126-049-11	ELECT	22uF	20%	50V
C645	1-110-339-11	MYLAR	220PF	5%	50V
C646	1-102-947-00	CERAMIC	10PF	5%	50V
C647	1-126-049-11	ELECT	22uF	20%	50V
C648	1-126-049-11	ELECT	22uF	20%	50V
C649	1-110-339-11	MYLAR	220PF	5%	50V
C650	1-102-947-00	CERAMIC	10PF	5%	50V
C651	1-126-049-11	ELECT	22uF	20%	50V
C652	1-126-049-11	ELECT	22uF	20%	50V
C653	1-110-339-11	MYLAR	220PF	5%	50V
C654	1-102-947-00	CERAMIC	10PF	5%	50V
C655	1-126-049-11	ELECT	22uF	20%	50V
C656	1-126-049-11	ELECT	22uF	20%	50V
C657	1-110-339-11	MYLAR	220PF	5%	50V
C658	1-102-947-00	CERAMIC	10PF	5%	50V
C659	1-126-049-11	ELECT	22uF	20%	50V
C660	1-126-049-11	ELECT	22uF	20%	50V
C661	1-126-049-11	ELECT	22uF	20%	50V
C662	1-126-049-11	ELECT	22uF	20%	50V
C663	1-126-049-11	ELECT	22uF	20%	50V
C664	1-126-049-11	ELECT	22uF	20%	50V
C665	1-126-049-11	ELECT	22uF	20%	50V
C666	1-126-049-11	ELECT	22uF	20%	50V
C667	1-126-049-11	ELECT	22uF	20%	50V
C668	1-126-049-11	ELECT	22uF	20%	50V
C669	1-126-049-11	ELECT	22uF	20%	50V
C670	1-126-049-11	ELECT	22uF	20%	50V

Ref. No.	Part No.	Description			Remark
C671	1-126-049-11	ELECT	22uF	20%	50V
C672	1-126-049-11	ELECT	22uF	20%	50V
C673	1-163-275-11	CERAMIC CHIP	0.001uF	5%	50V
C674	1-163-275-11	CERAMIC CHIP	0.001uF	5%	50V
C675	1-163-275-11	CERAMIC CHIP	0.001uF	5%	50V
C676	1-163-275-11	CERAMIC CHIP	0.001uF	5%	50V
C677	1-163-275-11	CERAMIC CHIP	0.001uF	5%	50V
C678	1-163-275-11	CERAMIC CHIP	0.001uF	5%	50V
C901	1-163-037-11	CERAMIC CHIP	0.022uF	10%	25V
C902	1-163-248-11	CERAMIC CHIP	75PF	5%	50V
C903	1-164-232-11	CERAMIC CHIP	0.01uF		50V
C904	1-164-232-11	CERAMIC CHIP	0.01uF		50V
C905	1-136-165-00	FILM	0.1uF	5%	50V
C906	1-136-173-00	FILM	0.47uF	5%	50V
C907	1-164-232-11	CERAMIC CHIP	0.01uF		50V
C908	1-136-173-00	FILM	0.47uF	5%	50V
C909	1-164-232-11	CERAMIC CHIP	0.01uF		50V
C910	1-126-933-11	ELECT	100uF	20%	10V
C911	1-163-239-11	CERAMIC CHIP	33PF	5%	50V
C912	1-126-967-11	ELECT	47uF	20%	50V
C913	1-163-275-11	CERAMIC CHIP	0.001uF	5%	50V
C914	1-165-319-11	CERAMIC CHIP	0.1uF		50V
C915	1-165-319-11	CERAMIC CHIP	0.1uF		50V
C916	1-165-319-11	CERAMIC CHIP	0.1uF		50V
C917	1-165-319-11	CERAMIC CHIP	0.1uF		50V
C918	1-165-319-11	CERAMIC CHIP	0.1uF		50V
C919	1-165-319-11	CERAMIC CHIP	0.1uF		50V
C920	1-165-319-11	CERAMIC CHIP	0.1uF		50V
C921	1-165-319-11	CERAMIC CHIP	0.1uF		50V
C922	1-165-319-11	CERAMIC CHIP	0.1uF		50V
C923	1-165-319-11	CERAMIC CHIP	0.1uF		50V
C924	1-165-319-11	CERAMIC CHIP	0.1uF		50V
C925	1-165-319-11	CERAMIC CHIP	0.1uF		50V
C926	1-165-319-11	CERAMIC CHIP	0.1uF		50V
C930	1-165-319-11	CERAMIC CHIP	0.1uF		50V
C931	1-165-319-11	CERAMIC CHIP	0.1uF		50V
		< CONNECTOR >			
CN102	1-564-510-11	PLUG, CONNECTOR 7P			
* CN103	1-564-104-00	PIN, CONNECTOR (B3P-VH) 3P			
CN104	1-564-320-00	PIN, CONNECTOR (B2P-VH) 2P			
CN105	1-564-510-11	PLUG (MICRO CONNECTOR) 6P			
* CN106	1-568-841-11	SOCKET, CONNECTOR 25P			
CN701	1-695-087-11	PIN, CONNECTOR (BOARD) 7P			
CN702	1-695-090-11	PIN, CONNECTOR (BOARD) 13P			
		< DIODE >			
D151	8-719-801-78	DIODE 1SS184			
D152	8-719-801-78	DIODE 1SS184			
D201	8-719-820-05	DIODE 1SS181			
D401	8-719-043-82	DIODE 02CZ5.1Y-TE85L			
D607	8-719-801-78	DIODE 1SS184			

MAIN

Ref. No.	Part No.	Description	Remark
D608	8-719-801-78	DIODE 1SS184	
D901	8-719-061-62	DIODE KV1851	
		< FILTER >	
F401	1-424-544-11	FILTER, NOISE	
F402	1-424-544-11	FILTER, NOISE	
F403	1-424-544-11	FILTER, NOISE	
F404	1-424-544-11	FILTER, NOISE	
		< FERRITE BEAD >	
FB401	1-410-397-21	FERRITE BEAD INDUCTOR	
FB402	1-410-397-21	FERRITE BEAD INDUCTOR	
FB403	1-410-397-21	FERRITE BEAD INDUCTOR	
FB404	1-410-397-21	FERRITE BEAD INDUCTOR	
FB405	1-410-397-21	FERRITE BEAD INDUCTOR	
FB406	1-410-397-21	FERRITE BEAD INDUCTOR	
FB888	1-410-397-21	FERRITE BEAD INDUCTOR	
FB889	1-410-397-21	FERRITE BEAD INDUCTOR	
		< FLUORESCENT INDICATOR >	
FL902	1-233-866-11	FILTER, BAND PASS	
		< IC >	
IC151	8-759-071-48	IC TA7807S	
IC152	8-759-071-47	IC TA79007S	
IC201	8-759-468-85	IC HD6433397A13F	
IC202	8-759-354-31	IC AT24C02N-10SCSL7221	
IC203	8-759-635-63	IC M51943BSL	
IC301	8-759-446-39	IC LC8905V	
IC302	8-759-240-80	IC TC74HC153AF	
IC303	8-749-923-04	IC TOTX178 (REC OUT OUTPUT)	
IC304	8-749-923-05	IC TORX178 (DIGITAL 3 INPUT)	
IC305	8-749-923-05	IC TORX178 (DIGITAL 2 INPUT)	
IC306	8-749-923-05	IC TORX178 (DIGITAL 1 INPUT)	
IC307	8-759-242-70	IC TC7WU04F	
IC401	8-759-326-71	IC CXD8517Q	
IC402	8-759-326-71	IC CXD8517Q	
IC403	8-759-326-71	IC CXD8517Q	
IC404	8-759-232-65	IC TC74HC157AF	
IC405	8-759-370-62	IC CXD8505BQ	
IC406	8-759-370-62	IC CXD8505BQ	
IC407	8-759-370-62	IC CXD8505BQ	
IC408	8-759-233-64	IC TC74HCU04AF	
IC409	8-759-371-51	IC CXA8042AS	
IC410	8-759-371-51	IC CXA8042AS	
IC411	8-759-371-51	IC CXA8042AS	
IC412	8-759-371-51	IC CXA8042AS	
IC413	8-759-371-51	IC CXA8042AS	
IC414	8-759-371-51	IC CXA8042AS	
IC415	8-759-636-55	IC M5218AFP	
IC416	8-759-636-55	IC M5218AFP	
IC417	8-759-636-55	IC M5218AFP	
IC418	8-759-636-55	IC M5218AFP	
IC419	8-759-636-55	IC M5218AFP	
IC420	8-759-636-55	IC M5218AFP	
IC421	8-759-449-11	IC M62361FP-T1	
IC422	8-759-463-69	IC IDT71024S20TY-TL	
IC423	8-759-446-40	IC SSP424023FJ88	
IC424	8-759-446-37	IC DSP56009FJ88F	
IC425	8-759-233-64	IC TC74HCU04AF	
IC426	8-759-630-34	IC M5278L05M	
IC601	8-759-636-55	IC M5218AFP	
IC602	8-759-636-55	IC M5218AFP	
IC603	8-759-636-55	IC M5218AFP	
IC604	8-759-636-55	IC M5218AFP	
IC605	8-759-636-55	IC M5218AFP	
IC606	8-759-636-55	IC M5218AFP	
IC607	8-759-636-55	IC M5218AFP	
IC608	8-759-636-55	IC M5218AFP	
IC609	8-759-636-55	IC M5218AFP	
IC901	8-759-446-38	IC PD4606A	
IC902	8-759-262-03	IC MC14577CF	
IC903	8-759-702-08	IC NJM360M	
IC904	8-759-636-55	IC M5218AFP	
IC905	8-759-636-55	IC M5218AFP	
IC906	8-759-233-64	IC TC74HCU04AF	
IC907	8-759-441-94	IC IDT71256SA20Y-TL	
IC908	8-759-441-94	IC IDT71256SA20Y-TL	
		< JACK >	
J301	1-764-413-11	JACK, PIN (DIGITAL 4 INPUT)	
J601	1-778-064-11	JACK, PIN 4P (FRONT, REAR OUTPUT)	
J602	1-779-492-11	JACK, PIN (BLK) 4P (WOOFER, CENTER OUTPUT)	
J603	1-779-493-11	JACK, PIN 6P (BYPASS INPUT)	
J901	1-779-491-11	JACK, PIN 1P (BLK)(AC-3 RF INPUT)	
		< JUMPER RESISTOR >	
JR401	1-216-295-91	CONDUCTOR, CHIP (2012)	
JR403	1-216-295-91	CONDUCTOR, CHIP (2012)	
JR404	1-216-295-91	CONDUCTOR, CHIP (2012)	
JR405	1-216-295-91	CONDUCTOR, CHIP (2012)	
JR407	1-216-295-91	CONDUCTOR, CHIP (2012)	
JR410	1-216-295-91	CONDUCTOR, CHIP (2012)	
JR412	1-216-295-91	CONDUCTOR, CHIP (2012)	
JW201	1-216-296-91	CONDUCTOR, CHIP (3216)	
JW202	1-216-296-91	CONDUCTOR, CHIP (3216)	
JW203	1-216-296-91	CONDUCTOR, CHIP (3216)	
JW204	1-216-295-91	CONDUCTOR, CHIP (2012)	
JW301	1-216-295-91	CONDUCTOR, CHIP (2012)	
JW302	1-216-296-91	CONDUCTOR, CHIP (3216)	
JW303	1-216-296-91	CONDUCTOR, CHIP (3216)	
JW304	1-216-296-91	CONDUCTOR, CHIP (3216)	
JW305	1-216-295-91	CONDUCTOR, CHIP (2012)	
JW306	1-216-295-91	CONDUCTOR, CHIP (2012)	

Ref. No.	Part No.	Description	Remark
JW307	1-216-295-91	CONDUCTOR, CHIP (2012)	
JW401	1-216-296-91	CONDUCTOR, CHIP (3216)	
JW402	1-216-296-91	CONDUCTOR, CHIP (3216)	
JW403	1-216-295-91	CONDUCTOR, CHIP (2012)	
JW405	1-216-295-91	CONDUCTOR, CHIP (2012)	
JW406	1-216-295-91	CONDUCTOR, CHIP (2012)	
JW501	1-216-295-91	CONDUCTOR, CHIP (2012)	
JW502	1-216-295-91	CONDUCTOR, CHIP (2012)	
JW503	1-216-295-91	CONDUCTOR, CHIP (2012)	
JW504	1-216-295-91	CONDUCTOR, CHIP (2012)	
JW505	1-216-295-91	CONDUCTOR, CHIP (2012)	
JW506	1-216-296-91	CONDUCTOR, CHIP (3216)	
JW507	1-216-296-91	CONDUCTOR, CHIP (3216)	
JW508	1-216-296-91	CONDUCTOR, CHIP (3216)	
JW509	1-216-296-91	CONDUCTOR, CHIP (3216)	
JW510	1-216-296-91	CONDUCTOR, CHIP (3216)	
JW511	1-216-296-91	CONDUCTOR, CHIP (3216)	
JW512	1-216-296-91	CONDUCTOR, CHIP (3216)	
JW513	1-216-296-91	CONDUCTOR, CHIP (3216)	
JW514	1-216-296-91	CONDUCTOR, CHIP (3216)	
JW515	1-216-296-91	CONDUCTOR, CHIP (3216)	
JW516	1-216-296-91	CONDUCTOR, CHIP (3216)	
JW517	1-216-296-91	CONDUCTOR, CHIP (3216)	
JW518	1-216-296-91	CONDUCTOR, CHIP (3216)	
JW519	1-216-296-91	CONDUCTOR, CHIP (3216)	
JW520	1-216-296-91	CONDUCTOR, CHIP (3216)	
JW521	1-216-295-91	CONDUCTOR, CHIP (2012)	
JW601	1-216-296-91	CONDUCTOR, CHIP (3216)	
JW602	1-216-296-91	CONDUCTOR, CHIP (3216)	
JW603	1-216-296-91	CONDUCTOR, CHIP (3216)	
JW604	1-216-296-91	CONDUCTOR, CHIP (3216)	
JW901	1-216-295-91	CONDUCTOR, CHIP (2012)	
JW902	1-216-296-91	CONDUCTOR, CHIP (3216)	
JW903	1-216-296-91	CONDUCTOR, CHIP (3216)	
JW904	1-216-296-91	CONDUCTOR, CHIP (3216)	
		< COIL >	
L901	1-410-391-11	INDUCTOR CHIP 68uH	
		< TRANSISTOR >	
Q617	8-729-107-46	TRANSISTOR 2SC3624A-L15	
Q618	8-729-107-46	TRANSISTOR 2SC3624A-L15	
Q619	8-729-107-46	TRANSISTOR 2SC3624A-L15	
Q620	8-729-107-46	TRANSISTOR 2SC3624A-L15	
Q621	8-729-107-46	TRANSISTOR 2SC3624A-L15	
Q622	8-729-107-46	TRANSISTOR 2SC3624A-L15	
Q623	8-729-107-46	TRANSISTOR 2SC3624A-L15	
Q624	8-729-107-46	TRANSISTOR 2SC3624A-L15	
Q625	8-729-107-46	TRANSISTOR 2SC3624A-L15	
Q626	8-729-107-46	TRANSISTOR 2SC3624A-L15	
Q627	8-729-107-46	TRANSISTOR 2SC3624A-L15	

Ref. No.	Part No.	Description	Remark
Q628	8-729-107-46	TRANSISTOR 2SC3624A-L15	
Q901	8-729-805-67	TRANSISTOR 2SA1342	
Q902	8-729-230-49	TRANSISTOR 2SC2712-YG	
Q903	8-729-230-49	TRANSISTOR 2SC2712-YG	
Q904	8-729-216-22	TRANSISTOR 2SA1162-G	
		< RESISTOR >	
R201	1-216-121-91	METAL GLAZE 1M 5%	1/10W
R202	1-216-073-00	METAL CHIP 10K 5%	1/10W
R203	1-216-073-00	METAL CHIP 10K 5%	1/10W
R204	1-216-073-00	METAL CHIP 10K 5%	1/10W
R205	1-216-073-00	METAL CHIP 10K 5%	1/10W
R206	1-216-073-00	METAL CHIP 10K 5%	1/10W
R207	1-216-073-00	METAL CHIP 10K 5%	1/10W
R208	1-216-073-00	METAL CHIP 10K 5%	1/10W
R209	1-216-295-91	CONDUCTOR, CHIP (2012)	
R301	1-216-022-00	METAL CHIP 75 5%	1/10W
R302	1-216-109-00	METAL CHIP 330K 5%	1/10W
R303	1-216-081-00	METAL CHIP 22K 5%	1/10W
R304	1-216-065-00	METAL CHIP 4.7K 5%	1/10W
R305	1-216-029-00	METAL CHIP 150 5%	1/10W
R306	1-216-053-00	METAL CHIP 1.5K 5%	1/10W
R307	1-216-022-00	METAL CHIP 75 5%	1/10W
R309	1-216-022-00	METAL CHIP 75 5%	1/10W
R310	1-216-022-00	METAL CHIP 75 5%	1/10W
R311	1-216-022-00	METAL CHIP 75 5%	1/10W
R313	1-216-022-00	METAL CHIP 75 5%	1/10W
R314	1-216-049-91	METAL GLAZE 1K 5%	1/10W
R315	1-216-073-00	METAL CHIP 10K 5%	1/10W
R316	1-216-049-91	METAL GLAZE 1K 5%	1/10W
R401	1-216-295-91	CONDUCTOR, CHIP (2012)	
R402	1-216-295-91	CONDUCTOR, CHIP (2012)	
R403	1-216-295-91	CONDUCTOR, CHIP (2012)	
R404	1-216-295-91	CONDUCTOR, CHIP (2012)	
R405	1-216-295-91	CONDUCTOR, CHIP (2012)	
R406	1-216-295-91	CONDUCTOR, CHIP (2012)	
R407	1-216-295-91	CONDUCTOR, CHIP (2012)	
R408	1-216-295-91	CONDUCTOR, CHIP (2012)	
R409	1-216-295-91	CONDUCTOR, CHIP (2012)	
R410	1-216-295-91	CONDUCTOR, CHIP (2012)	
R411	1-216-295-91	CONDUCTOR, CHIP (2012)	
R412	1-216-025-91	METAL GLAZE 100 5%	1/10W
R413	1-216-033-00	METAL GLAZE 220 5%	1/10W
R415	1-216-033-00	METAL GLAZE 220 5%	1/10W
R416	1-216-295-91	CONDUCTOR, CHIP (2012)	
R417	1-216-295-91	CONDUCTOR, CHIP (2012)	
R418	1-216-295-91	CONDUCTOR, CHIP (2012)	
R419	1-216-295-91	CONDUCTOR, CHIP (2012)	
R420	1-216-295-91	CONDUCTOR, CHIP (2012)	
R421	1-216-295-91	CONDUCTOR, CHIP (2012)	
R422	1-216-025-91	METAL GLAZE 100 5%	1/10W

MAIN

Ref. No.	Part No.	Description			Remark
R423	1-216-295-91	CONDUCTOR, CHIP (2012)			
R424	1-216-025-91	METAL GLAZE	100	5%	1/10W
R425	1-216-025-91	METAL GLAZE	100	5%	1/10W
R426	1-216-025-91	METAL GLAZE	100	5%	1/10W
R427	1-216-025-91	METAL GLAZE	100	5%	1/10W
R428	1-216-295-91	CONDUCTOR, CHIP (2012)			
R429	1-216-025-91	METAL GLAZE	100	5%	1/10W
R430	1-216-025-91	METAL GLAZE	100	5%	1/10W
R431	1-216-295-91	CONDUCTOR, CHIP (2012)			
R432	1-216-025-91	METAL GLAZE	100	5%	1/10W
R433	1-216-025-91	METAL GLAZE	100	5%	1/10W
R435	1-216-025-91	METAL GLAZE	100	5%	1/10W
R436	1-216-025-91	METAL GLAZE	100	5%	1/10W
R437	1-216-025-91	METAL GLAZE	100	5%	1/10W
R438	1-216-025-91	METAL GLAZE	100	5%	1/10W
R440	1-216-025-91	METAL GLAZE	100	5%	1/10W
R441	1-216-025-91	METAL GLAZE	100	5%	1/10W
R443	1-216-025-91	METAL GLAZE	100	5%	1/10W
R444	1-216-025-91	METAL GLAZE	100	5%	1/10W
R448	1-216-025-91	METAL GLAZE	100	5%	1/10W
R449	1-216-295-91	CONDUCTOR, CHIP (2012)			
R450	1-216-295-91	CONDUCTOR, CHIP (2012)			
R451	1-216-295-91	CONDUCTOR, CHIP (2012)			
R452	1-216-025-91	METAL GLAZE	100	5%	1/10W
R453	1-216-025-91	METAL GLAZE	100	5%	1/10W
R455	1-216-025-91	METAL GLAZE	100	5%	1/10W
R456	1-216-025-91	METAL GLAZE	100	5%	1/10W
R457	1-216-025-91	METAL GLAZE	100	5%	1/10W
R458	1-216-025-91	METAL GLAZE	100	5%	1/10W
R460	1-216-049-91	METAL GLAZE	1K	5%	1/10W
R461	1-216-049-91	METAL GLAZE	1K	5%	1/10W
R462	1-216-049-91	METAL GLAZE	1K	5%	1/10W
R465	1-216-025-91	METAL GLAZE	100	5%	1/10W
R466	1-216-025-91	METAL GLAZE	100	5%	1/10W
R467	1-259-971-11	CARBON MELF	10	2%	1/8W
R468	1-259-971-11	CARBON MELF	10	2%	1/8W
R469	1-259-999-11	CARBON MELF	2.2K	2%	1/8W
R470	1-259-992-11	CARBON MELF	560	2%	1/8W
R471	1-259-971-11	CARBON MELF	10	2%	1/8W
R472	1-259-971-11	CARBON MELF	10	2%	1/8W
R473	1-259-999-11	CARBON MELF	2.2K	2%	1/8W
R474	1-259-992-11	CARBON MELF	560	2%	1/8W
R475	1-259-971-11	CARBON MELF	10	2%	1/8W
R476	1-259-971-11	CARBON MELF	10	2%	1/8W
R477	1-259-999-11	CARBON MELF	2.2K	2%	1/8W
R478	1-259-992-11	CARBON MELF	560	2%	1/8W
R479	1-259-971-11	CARBON MELF	10	2%	1/8W
R480	1-259-971-11	CARBON MELF	10	2%	1/8W
R481	1-259-999-11	CARBON MELF	2.2K	2%	1/8W
R482	1-259-992-11	CARBON MELF	560	2%	1/8W
R483	1-259-971-11	CARBON MELF	10	2%	1/8W
R484	1-259-971-11	CARBON MELF	10	2%	1/8W

Ref. No.	Part No.	Description			Remark
R485	1-259-999-11	CARBON MELF	2.2K	2%	1/8W
R486	1-259-992-11	CARBON MELF	560	2%	1/8W
R487	1-259-971-11	CARBON MELF	10	2%	1/8W
R488	1-259-971-11	CARBON MELF	10	2%	1/8W
R489	1-259-999-11	CARBON MELF	2.2K	2%	1/8W
R490	1-259-992-11	CARBON MELF	560	2%	1/8W
R491	1-259-971-11	CARBON MELF	10	2%	1/8W
R492	1-259-971-11	CARBON MELF	10	2%	1/8W
R493	1-259-988-11	CARBON MELF	270	2%	1/8W
R494	1-259-983-11	CARBON MELF	100	2%	1/8W
R495	1-259-976-11	CARBON MELF	27	2%	1/8W
R496	1-260-016-11	CARBON MELF	47K	2%	1/8W
R497	1-259-971-11	CARBON MELF	10	2%	1/8W
R498	1-259-971-11	CARBON MELF	10	2%	1/8W
R499	1-259-988-11	CARBON MELF	270	2%	1/8W
R500	1-259-976-11	CARBON MELF	27	2%	1/8W
R501	1-259-983-11	CARBON MELF	100	2%	1/8W
R502	1-259-971-11	CARBON MELF	10	2%	1/8W
R503	1-259-971-11	CARBON MELF	10	2%	1/8W
R504	1-259-988-11	CARBON MELF	270	2%	1/8W
R505	1-259-983-11	CARBON MELF	100	2%	1/8W
R506	1-259-976-11	CARBON MELF	27	2%	1/8W
R507	1-260-016-11	CARBON MELF	47K	2%	1/8W
R508	1-259-971-11	CARBON MELF	10	2%	1/8W
R509	1-259-971-11	CARBON MELF	10	2%	1/8W
R510	1-259-988-11	CARBON MELF	270	2%	1/8W
R511	1-259-976-11	CARBON MELF	27	2%	1/8W
R512	1-259-983-11	CARBON MELF	100	2%	1/8W
R513	1-259-971-11	CARBON MELF	10	2%	1/8W
R514	1-259-971-11	CARBON MELF	10	2%	1/8W
R515	1-259-988-11	CARBON MELF	270	2%	1/8W
R516	1-259-983-11	CARBON MELF	100	2%	1/8W
R517	1-259-976-11	CARBON MELF	27	2%	1/8W
R518	1-260-016-11	CARBON MELF	47K	2%	1/8W
R519	1-259-971-11	CARBON MELF	10	2%	1/8W
R520	1-259-971-11	CARBON MELF	10	2%	1/8W
R521	1-259-988-11	CARBON MELF	270	2%	1/8W
R522	1-259-976-11	CARBON MELF	27	2%	1/8W
R523	1-259-983-11	CARBON MELF	100	2%	1/8W
R524	1-259-971-11	CARBON MELF	10	2%	1/8W
R525	1-259-971-11	CARBON MELF	10	2%	1/8W
R526	1-259-988-11	CARBON MELF	270	2%	1/8W
R527	1-259-983-11	CARBON MELF	100	2%	1/8W
R528	1-259-976-11	CARBON MELF	27	2%	1/8W
R529	1-260-016-11	CARBON MELF	47K	2%	1/8W
R530	1-259-971-11	CARBON MELF	10	2%	1/8W
R531	1-259-971-11	CARBON MELF	10	2%	1/8W
R532	1-259-988-11	CARBON MELF	270	2%	1/8W
R533	1-259-976-11	CARBON MELF	27	2%	1/8W
R534	1-259-983-11	CARBON MELF	100	2%	1/8W
R535	1-259-971-11	CARBON MELF	10	2%	1/8W
R536	1-259-971-11	CARBON MELF	10	2%	1/8W

Ref. No.	Part No.	Description			Remark
R537	1-259-988-11	CARBON MELF	270	2%	1/8W
R538	1-259-983-11	CARBON MELF	100	2%	1/8W
R539	1-259-976-11	CARBON MELF	27	2%	1/8W
R540	1-260-016-11	CARBON MELF	47K	2%	1/8W
R541	1-259-971-11	CARBON MELF	10	2%	1/8W
R542	1-259-971-11	CARBON MELF	10	2%	1/8W
R543	1-259-988-11	CARBON MELF	270	2%	1/8W
R544	1-259-976-11	CARBON MELF	27	2%	1/8W
R545	1-259-983-11	CARBON MELF	100	2%	1/8W
R546	1-259-971-11	CARBON MELF	10	2%	1/8W
R547	1-259-971-11	CARBON MELF	10	2%	1/8W
R548	1-259-988-11	CARBON MELF	270	2%	1/8W
R549	1-259-983-11	CARBON MELF	100	2%	1/8W
R550	1-259-976-11	CARBON MELF	27	2%	1/8W
R551	1-260-016-11	CARBON MELF	47K	2%	1/8W
R552	1-259-971-11	CARBON MELF	10	2%	1/8W
R553	1-259-971-11	CARBON MELF	10	2%	1/8W
R554	1-259-988-11	CARBON MELF	270	2%	1/8W
R555	1-259-976-11	CARBON MELF	27	2%	1/8W
R556	1-259-983-11	CARBON MELF	100	2%	1/8W
R558	1-216-295-91	CONDUCTOR, CHIP (2012)			
R559	1-216-295-91	CONDUCTOR, CHIP (2012)			
R560	1-216-295-91	CONDUCTOR, CHIP (2012)			
R561	1-216-295-91	CONDUCTOR, CHIP (2012)			
R562	1-216-295-91	CONDUCTOR, CHIP (2012)			
R564	1-216-073-00	METAL CHIP	10K	5%	1/10W
R565	1-216-295-91	CONDUCTOR, CHIP (2012)			
R566	1-216-295-91	CONDUCTOR, CHIP (2012)			
R567	1-216-025-91	METAL GLAZE	100	5%	1/10W
R568	1-216-073-00	METAL CHIP	10K	5%	1/10W
R569	1-216-049-91	METAL GLAZE	1K	5%	1/10W
R601	1-260-008-11	CARBON MELF	10K	2%	1/8W
R602	1-259-936-11	CARBON MELF	13K	2%	1/8W
R603	1-259-936-11	CARBON MELF	13K	2%	1/8W
R604	1-259-995-11	CARBON MELF	1K	2%	1/8W
R605	1-260-008-11	CARBON MELF	10K	2%	1/8W
R607	1-259-999-11	CARBON MELF	2.2K	2%	1/8W
R608	1-260-011-11	CARBON MELF	18K	2%	1/8W
R609	1-259-926-11	CARBON MELF	2K	2%	1/8W
R610	1-216-296-91	CONDUCTOR, CHIP (3216)			
R611	1-260-008-11	CARBON MELF	10K	2%	1/8W
R612	1-259-936-11	CARBON MELF	13K	2%	1/8W
R613	1-259-936-11	CARBON MELF	13K	2%	1/8W
R614	1-259-995-11	CARBON MELF	1K	2%	1/8W
R615	1-260-008-11	CARBON MELF	10K	2%	1/8W
R617	1-259-999-11	CARBON MELF	2.2K	2%	1/8W
R618	1-260-011-11	CARBON MELF	18K	2%	1/8W
R619	1-259-926-11	CARBON MELF	2K	2%	1/8W
R620	1-216-296-91	CONDUCTOR, CHIP (3216)			
R621	1-260-008-11	CARBON MELF	10K	2%	1/8W
R622	1-259-936-11	CARBON MELF	13K	2%	1/8W

Ref. No.	Part No.	Description			Remark
R623	1-259-936-11	CARBON MELF	13K	2%	1/8W
R624	1-259-995-11	CARBON MELF	1K	2%	1/8W
R625	1-260-008-11	CARBON MELF	10K	2%	1/8W
R627	1-259-999-11	CARBON MELF	2.2K	2%	1/8W
R628	1-260-011-11	CARBON MELF	18K	2%	1/8W
R629	1-259-926-11	CARBON MELF	2K	2%	1/8W
R630	1-216-296-91	CONDUCTOR, CHIP (3216)			
R631	1-260-008-11	CARBON MELF	10K	2%	1/8W
R632	1-259-936-11	CARBON MELF	13K	2%	1/8W
R633	1-259-936-11	CARBON MELF	13K	2%	1/8W
R634	1-259-995-11	CARBON MELF	1K	2%	1/8W
R635	1-260-008-11	CARBON MELF	10K	2%	1/8W
R637	1-259-999-11	CARBON MELF	2.2K	2%	1/8W
R638	1-260-011-11	CARBON MELF	18K	2%	1/8W
R639	1-259-926-11	CARBON MELF	2K	2%	1/8W
R640	1-216-296-91	CONDUCTOR, CHIP (3216)			
R641	1-260-008-11	CARBON MELF	10K	2%	1/8W
R642	1-259-936-11	CARBON MELF	13K	2%	1/8W
R643	1-259-995-11	CARBON MELF	1K	2%	1/8W
R645	1-260-008-11	CARBON MELF	10K	2%	1/8W
R647	1-259-999-11	CARBON MELF	2.2K	2%	1/8W
R648	1-260-011-11	CARBON MELF	18K	2%	1/8W
R649	1-259-926-11	CARBON MELF	2K	2%	1/8W
R650	1-216-296-91	CONDUCTOR, CHIP (3216)			
R651	1-260-008-11	CARBON MELF	10K	2%	1/8W
R652	1-259-936-11	CARBON MELF	13K	2%	1/8W
R653	1-259-936-11	CARBON MELF	13K	2%	1/8W
R654	1-259-995-11	CARBON MELF	1K	2%	1/8W
R655	1-260-008-11	CARBON MELF	10K	2%	1/8W
R657	1-259-999-11	CARBON MELF	2.2K	2%	1/8W
R658	1-260-011-11	CARBON MELF	18K	2%	1/8W
R659	1-259-926-11	CARBON MELF	2K	2%	1/8W
R660	1-216-296-91	CONDUCTOR, CHIP (3216)			
R661	1-260-012-11	CARBON MELF	22K	2%	1/8W
R662	1-260-012-11	CARBON MELF	22K	2%	1/8W
R663	1-249-427-11	CARBON	6.8K	5%	1/4W F
R664	1-249-427-11	CARBON	6.8K	5%	1/4W F
R665	1-259-995-11	CARBON MELF	1K	2%	1/8W
R666	1-260-026-11	CARBON MELF	330K	2%	1/8W
R667	1-260-014-11	CARBON MELF	33K	2%	1/8W
R668	1-260-004-11	CARBON MELF	4.7K	2%	1/8W
R669	1-259-995-11	CARBON MELF	1K	2%	1/8W
R670	1-260-026-11	CARBON MELF	330K	2%	1/8W
R671	1-260-014-11	CARBON MELF	33K	2%	1/8W
R672	1-260-004-11	CARBON MELF	4.7K	2%	1/8W
R673	1-260-012-11	CARBON MELF	22K	2%	1/8W
R674	1-260-012-11	CARBON MELF	22K	2%	1/8W
R675	1-249-427-11	CARBON	6.8K	5%	1/4W F
R676	1-249-427-11	CARBON	6.8K	5%	1/4W F
R677	1-259-995-11	CARBON MELF	1K	2%	1/8W
R678	1-260-026-11	CARBON MELF	330K	2%	1/8W
R679	1-260-014-11	CARBON MELF	33K	2%	1/8W

MAIN

Ref. No.	Part No.	Description			Remark	
R680	1-260-004-11	CARBON MELF	4.7K	2%	1/8W	
R681	1-259-995-11	CARBON MELF	1K	2%	1/8W	
R682	1-260-026-11	CARBON MELF	330K	2%	1/8W	
R683	1-260-014-11	CARBON MELF	33K	2%	1/8W	
R684	1-260-004-11	CARBON MELF	4.7K	2%	1/8W	
R685	1-260-012-11	CARBON MELF	22K	2%	1/8W	
R686	1-260-012-11	CARBON MELF	22K	2%	1/8W	
R687	1-249-427-11	CARBON	6.8K	5%	1/4W	F
R688	1-249-427-11	CARBON	6.8K	5%	1/4W	F
R689	1-259-995-11	CARBON MELF	1K	2%	1/8W	
R690	1-260-026-11	CARBON MELF	330K	2%	1/8W	
R691	1-260-014-11	CARBON MELF	33K	2%	1/8W	
R692	1-260-004-11	CARBON MELF	4.7K	2%	1/8W	
R693	1-259-995-11	CARBON MELF	1K	2%	1/8W	
R694	1-260-026-11	CARBON MELF	330K	2%	1/8W	
R695	1-260-014-11	CARBON MELF	33K	2%	1/8W	
R696	1-260-004-11	CARBON MELF	4.7K	2%	1/8W	
R721	1-260-020-11	CARBON MELF	100K	2%	1/8W	
R722	1-259-983-11	CARBON MELF	100	2%	1/8W	
R723	1-260-004-11	CARBON MELF	4.7K	2%	1/8W	
R724	1-260-020-11	CARBON MELF	100K	2%	1/8W	
R725	1-259-983-11	CARBON MELF	100	2%	1/8W	
R726	1-260-004-11	CARBON MELF	4.7K	2%	1/8W	
R727	1-260-020-11	CARBON MELF	100K	2%	1/8W	
R728	1-259-983-11	CARBON MELF	100	2%	1/8W	
R729	1-260-004-11	CARBON MELF	4.7K	2%	1/8W	
R730	1-260-020-11	CARBON MELF	100K	2%	1/8W	
R731	1-259-983-11	CARBON MELF	100	2%	1/8W	
R732	1-260-004-11	CARBON MELF	4.7K	2%	1/8W	
R733	1-260-020-11	CARBON MELF	100K	2%	1/8W	
R734	1-259-983-11	CARBON MELF	100	2%	1/8W	
R735	1-260-004-11	CARBON MELF	4.7K	2%	1/8W	
R736	1-260-020-11	CARBON MELF	100K	2%	1/8W	
R737	1-259-983-11	CARBON MELF	100	2%	1/8W	
R738	1-260-004-11	CARBON MELF	4.7K	2%	1/8W	
R755	1-216-069-91	METAL CHIP	6.8K	5%	1/10W	
R756	1-216-069-91	METAL CHIP	6.8K	5%	1/10W	
R757	1-216-069-91	METAL CHIP	6.8K	5%	1/10W	
R758	1-216-069-91	METAL CHIP	6.8K	5%	1/10W	
R759	1-216-069-91	METAL CHIP	6.8K	5%	1/10W	
R760	1-216-069-91	METAL CHIP	6.8K	5%	1/10W	
R761	1-216-069-91	METAL CHIP	6.8K	5%	1/10W	
R762	1-216-069-91	METAL CHIP	6.8K	5%	1/10W	
R763	1-216-069-91	METAL CHIP	6.8K	5%	1/10W	
R764	1-216-069-91	METAL CHIP	6.8K	5%	1/10W	
R765	1-216-069-91	METAL CHIP	6.8K	5%	1/10W	
R766	1-216-069-91	METAL CHIP	6.8K	5%	1/10W	
R901	1-216-073-00	METAL CHIP	10K	5%	1/10W	
R902	1-216-073-00	METAL CHIP	10K	5%	1/10W	
R903	1-216-073-00	METAL CHIP	10K	5%	1/10W	
R904	1-216-073-00	METAL CHIP	10K	5%	1/10W	
R905	1-216-097-91	METAL GLAZE	100K	5%	1/10W	

Ref. No.	Part No.	Description			Remark
R906	1-216-097-91	METAL GLAZE	100K	5%	1/10W
R907	1-216-023-00	METAL CHIP	82	5%	1/10W
R908	1-216-042-00	METAL CHIP	510	5%	1/10W
R909	1-216-049-91	METAL GLAZE	1K	5%	1/10W
R910	1-216-049-91	METAL GLAZE	1K	5%	1/10W
R911	1-216-049-91	METAL GLAZE	1K	5%	1/10W
R912	1-216-073-00	METAL CHIP	10K	5%	1/10W
R913	1-216-073-00	METAL CHIP	10K	5%	1/10W
R914	1-216-073-00	METAL CHIP	10K	5%	1/10W
R915	1-216-073-00	METAL CHIP	10K	5%	1/10W
R916	1-216-073-00	METAL CHIP	10K	5%	1/10W
R917	1-216-073-00	METAL CHIP	10K	5%	1/10W
R918	1-216-065-00	METAL CHIP	4.7K	5%	1/10W
R919	1-216-049-91	METAL GLAZE	1K	5%	1/10W
R920	1-216-029-00	METAL CHIP	150	5%	1/10W
R921	1-216-057-00	METAL CHIP	2.2K	5%	1/10W
R922	1-216-037-00	METAL CHIP	330	5%	1/10W
R923	1-216-049-91	METAL GLAZE	1K	5%	1/10W
R924	1-216-049-91	METAL GLAZE	1K	5%	1/10W
R925	1-216-049-91	METAL GLAZE	1K	5%	1/10W
R926	1-216-073-00	METAL CHIP	10K	5%	1/10W
R927	1-216-073-00	METAL CHIP	10K	5%	1/10W
R928	1-216-049-91	METAL GLAZE	1K	5%	1/10W
R929	1-216-049-91	METAL GLAZE	1K	5%	1/10W
R930	1-216-073-00	METAL CHIP	10K	5%	1/10W
R931	1-216-073-00	METAL CHIP	10K	5%	1/10W
R932	1-216-085-00	METAL CHIP	33K	5%	1/10W
R933	1-216-049-91	METAL GLAZE	1K	5%	1/10W
R934	1-216-089-91	METAL GLAZE	47K	5%	1/10W
R935	1-216-070-00	METAL CHIP	7.5K	5%	1/10W
R936	1-216-073-00	METAL CHIP	10K	5%	1/10W
R937	1-216-089-91	METAL GLAZE	47K	5%	1/10W
R938	1-216-027-00	METAL CHIP	120	5%	1/10W
R939	1-216-073-00	METAL CHIP	10K	5%	1/10W
R940	1-216-073-00	METAL CHIP	10K	5%	1/10W
R941	1-216-105-91	METAL GLAZE	220K	5%	1/10W
R942	1-216-089-91	METAL GLAZE	47K	5%	1/10W
R943	1-216-105-91	METAL GLAZE	220K	5%	1/10W
R944	1-216-093-00	METAL CHIP	68K	5%	1/10W
R945	1-216-089-91	METAL GLAZE	47K	5%	1/10W
R946	1-216-089-91	METAL GLAZE	47K	5%	1/10W
R947	1-216-057-00	METAL CHIP	2.2K	5%	1/10W
R948	1-216-057-00	METAL CHIP	2.2K	5%	1/10W
R949	1-216-073-00	METAL CHIP	10K	5%	1/10W
R950	1-216-021-00	METAL CHIP	68	5%	1/10W
R951	1-216-295-91	CONDUCTOR, CHIP (2012)			
R952	1-216-073-00	METAL CHIP	10K	5%	1/10W
R953	1-216-025-91	METAL GLAZE	100	5%	1/10W
R954	1-216-121-91	METAL GLAZE	1M	5%	1/10W
R955	1-216-295-91	CONDUCTOR, CHIP (2012)			
R956	1-216-097-91	METAL GLAZE	100K	5%	1/10W

Ref. No.	Part No.	Description			Remark
R957	1-216-025-91	METAL GLAZE	100	5%	1/10W
R958	1-216-073-00	METAL CHIP	10K	5%	1/10W
R959	1-216-073-00	METAL CHIP	10K	5%	1/10W
R960	1-216-073-00	METAL CHIP	10K	5%	1/10W
R961	1-216-073-00	METAL CHIP	10K	5%	1/10W
R962	1-216-073-00	METAL CHIP	10K	5%	1/10W
R963	1-216-073-00	METAL CHIP	10K	5%	1/10W
R964	1-216-073-00	METAL CHIP	10K	5%	1/10W
R965	1-216-073-00	METAL CHIP	10K	5%	1/10W
R966	1-216-073-00	METAL CHIP	10K	5%	1/10W
R967	1-216-073-00	METAL CHIP	10K	5%	1/10W
		< VARIABLE RESISTOR >			
RV301	1-241-393-21	RES, ADJ, METAL GLAZE 2.2K			
RV901	1-241-393-21	RES, ADJ, METAL GLAZE 2.2K			
		< RELAY >			
RY607	1-515-614-11	RELAY			
RY608	1-515-614-11	RELAY			
RY609	1-515-614-11	RELAY			
RY610	1-515-614-11	RELAY			
RY611	1-515-614-11	RELAY			
RY612	1-515-614-11	RELAY			
		< VIBRATOR >			
X201	1-767-496-11	VIBRATOR, CRYSTAL (16MHz)			
X401	1-767-433-11	VIBRATOR, CRYSTAL (45.152MHz)			
X901	1-767-434-11	VIBRATOR, CRYSTAL (18.432MHz)			
X902	1-767-435-11	VIBRATOR, CRYSTAL (46.08MHz)			

****

*	A-4398-191-A	PS BOARD, COMPLETE (US,CND) **********			
*	A-4398-192-A	PS BOARD, COMPLETE (AEP,E,SP,MY,CH) **********			
	7-682-548-09	SCREW (3X8)			
		< CAPACITOR >			
C104	1-126-023-11	ELECT	100uF	20%	25V
C105	1-126-023-11	ELECT	100uF	20%	25V
C106	1-126-027-11	ELECT	1000uF	20%	25V
C107	1-126-027-11	ELECT	1000uF	20%	25V
C111	1-126-964-11	ELECT	10uF	20%	50V
C112	1-126-927-11	ELECT	2200uF	20%	10V
C113	1-126-926-11	ELECT	1000uF	20%	10V
C114	1-126-963-11	ELECT	4.7uF	20%	50V
C117	1-126-967-11	ELECT	47uF	20%	50V
C118	1-126-967-11	ELECT	47uF	20%	50V
C119	1-164-046-11	CERAMIC	10PF	0.5PF	50V
C120	1-164-046-11	CERAMIC	10PF	0.5PF	50V

Ref. No.	Part No.	Description			Remark
C121	1-136-165-00	FILM	0.1uF	5%	50V
C122	1-136-165-00	FILM	0.1uF	5%	50V
C133	1-162-303-11	CERAMIC	0.0033uF	20%	16V
C134	1-162-303-11	CERAMIC	0.0033uF	20%	16V
C135	1-162-303-11	CERAMIC	0.0033uF	20%	16V
C136	1-162-303-11	CERAMIC	0.0033uF	20%	16V
C137	1-162-294-31	CERAMIC	0.001uF	10%	50V
C138	1-162-303-11	CERAMIC	0.0033uF	20%	16V
C139	1-162-294-31	CERAMIC	0.001uF	10%	50V
C140	1-162-294-31	CERAMIC	0.001uF	10%	50V
C141	1-162-303-11	CERAMIC	0.0033uF	20%	16V
C142	1-162-303-11	CERAMIC	0.0033uF	20%	16V
C143	1-162-303-11	CERAMIC	0.0033uF	20%	16V
		< CONNECTOR >			
* CN203	1-564-104-00	PIN, CONNECTOR (B3P-VH) 3P			
CN204	1-564-320-00	PIN, CONNECTOR (B2P-VH) 2P			
CN205	1-564-510-11	PLUG (MICRO CONNECTOR) 6P			
CN301	1-564-510-11	PLUG (MICRO CONNECTOR) 6P			
* CN302	1-564-243-11	PIN, CONNECTOR 6P			
		< DIODE >			
D102	8-719-933-39	DIODE HZS6C1L			
D103	8-719-933-39	DIODE HZS6C1L			
D104	8-719-987-63	DIODE 1N4148M			
D107	8-719-987-63	DIODE 1N4148M			
D108	8-719-987-63	DIODE 1N4148M			
D109	8-719-987-63	DIODE 1N4148M			
D110	8-719-933-54	DIODE HZS9A2L			
D111	8-719-933-54	DIODE HZS9A2L			
D119	8-719-933-99	DIODE HZS22-1L			
D120	8-719-933-39	DIODE HZS6C1L			
D121	8-719-933-99	DIODE HZS22-1L			
		< EARTH >			
* E3	1-537-738-21	TERMINAL, EARTH			
		< IC >			
IC101	8-759-634-51	IC M5218AP			
IC102	8-759-632-07	IC M5237L			
IC103	8-759-245-79	IC TA79005S			
		< IC LINK >			
⚠PS101	1-532-840-31	LINK, IC (PRF1250)(1.25A)(AEP,E,SP,MY,CH)			
⚠PS102	1-532-839-31	LINK, IC (PRF1000)(1A)(AEP,E,SP,MY,CH)			
		< TRANSISTOR >			
Q101	8-729-141-83	TRANSISTOR 2SB1094-LK			
Q102	8-729-209-15	TRANSISTOR 2SD2012			
Q103	8-729-141-83	TRANSISTOR 2SB1094-LK			
Q104	8-729-141-83	TRANSISTOR 2SB1094-LK			
Q105	8-729-119-78	TRANSISTOR 2SC2785-HFE			

The components identified by mark ⚠ or dotted line with mark ⚠ are critical for safety.
Replace only with part number specified.

Les composants identifiés par une marque ⚠ sont critiques pour la sécurité.
Ne les remplacer que par une piéce portant le numéro spécifié.

PS **SW** **TR**

Ref. No.	Part No.	Description				Remark
Q106	8-729-209-15	TRANSISTOR 2SD2012				
Q107	8-729-119-78	TRANSISTOR 2SC2785-HFE				
Q108	8-729-119-76	TRANSISTOR 2SA1175-HFE				
		< RESISTOR >				
R101	1-249-409-11	CARBON	220	5%	1/4W	F (AEP,E,SP,MY,CH)
R101	1-249-417-11	CARBON	1K	5%	1/4W	F (US,CND)
R102	1-249-409-11	CARBON	220	5%	1/4W	F (AEP,E,SP,MY,CH)
R102	1-249-417-11	CARBON	1K	5%	1/4W	F (US,CND)
R103	1-247-843-11	CARBON	3.3K	5%	1/4W	
R104	1-247-843-11	CARBON	3.3K	5%	1/4W	
R105	1-249-429-11	CARBON	10K	5%	1/4W	
R106	1-249-429-11	CARBON	10K	5%	1/4W	
R107	1-249-419-11	CARBON	1.5K	5%	1/4W	F
R108	1-249-419-11	CARBON	1.5K	5%	1/4W	F
R109	1-249-417-11	CARBON	1K	5%	1/4W	F
R110	1-249-417-11	CARBON	1K	5%	1/4W	F
R111	1-249-409-11	CARBON	220	5%	1/4W	F
R113	1-247-843-11	CARBON	3.3K	5%	1/4W	
R114	1-249-417-11	CARBON	1K	5%	1/4W	F
⚠R115	1-217-153-00	METAL PLATE	0.47	10%	2W	
⚠R116	1-217-153-00	METAL PLATE	0.47	10%	2W	
R117	1-249-437-11	CARBON	47K	5%	1/4W	
R119	1-249-421-11	CARBON	2.2K	5%	1/4W	F
R120	1-249-429-11	CARBON	10K	5%	1/4W	
R121	1-249-429-11	CARBON	10K	5%	1/4W	
R122	1-249-417-11	CARBON	1K	5%	1/4W	F
R123	1-249-417-11	CARBON	1K	5%	1/4W	F
R124	1-249-411-11	CARBON	330	5%	1/4W	(AEP,E,SP,MY,CH)
R124	1-249-417-11	CARBON	1K	5%	1/4W	F (US,CND)
R125	1-249-411-11	CARBON	330	5%	1/4W	(AEP,E,SP,MY,CH)
R125	1-249-417-11	CARBON	1K	5%	1/4W	F (US,CND)
⚠R126	1-212-865-00	FUSIBLE	22	5%	1/4W	F

****

Ref. No.	Part No.	Description				Remark
*	1-664-279-11	SW BOARD				
		********				
		< CONNECTOR >				
CN4	1-564-321-00	PIN, CONNECTOR 2P				
		< SWITCH >				
⚠S1	1-572-267-51	SWITCH, PUSH (AC POWER)(1 KEY)(POWER)				

****

Ref. No.	Part No.	Description				Remark
*	A-4398-190-A	TR BOARD, COMPLETE				
		**********				
		< CONNECTOR >				
CN703	1-695-092-11	SOCKET, CONNECTOR 7P				
CN704	1-695-095-11	SOCKET, CONNECTOR 13P				
		< TRANSISTOR >				
Q601	8-729-216-22	TRANSISTOR 2SA1162-G				
Q602	8-729-230-49	TRANSISTOR 2SC2712-YG				
Q603	8-729-216-22	TRANSISTOR 2SA1162-G				
Q604	8-729-230-49	TRANSISTOR 2SC2712-YG				
Q605	8-729-216-22	TRANSISTOR 2SA1162-G				
Q606	8-729-230-49	TRANSISTOR 2SC2712-YG				
Q607	8-729-216-22	TRANSISTOR 2SA1162-G				
Q608	8-729-230-49	TRANSISTOR 2SC2712-YG				
Q609	8-729-216-22	TRANSISTOR 2SA1162-G				
Q610	8-729-230-49	TRANSISTOR 2SC2712-YG				
Q611	8-729-216-22	TRANSISTOR 2SA1162-G				
Q612	8-729-230-49	TRANSISTOR 2SC2712-YG				
Q613	8-729-216-22	TRANSISTOR 2SA1162-G				
Q614	8-729-230-49	TRANSISTOR 2SC2712-YG				
Q615	8-729-216-22	TRANSISTOR 2SA1162-G				
Q616	8-729-230-49	TRANSISTOR 2SC2712-YG				
		< RESISTOR >				
R697	1-216-295-91	CONDUCTOR, CHIP (2012)				
R698	1-216-045-00	METAL CHIP	680	5%	1/10W	
R699	1-216-065-00	METAL CHIP	4.7K	5%	1/10W	
R700	1-216-295-91	CONDUCTOR, CHIP (2012)				
R701	1-216-045-00	METAL CHIP	680	5%	1/10W	
R702	1-216-065-00	METAL CHIP	4.7K	5%	1/10W	
R703	1-216-295-91	CONDUCTOR, CHIP (2012)				
R704	1-216-045-00	METAL CHIP	680	5%	1/10W	
R705	1-216-065-00	METAL CHIP	4.7K	5%	1/10W	
R706	1-216-295-91	CONDUCTOR, CHIP (2012)				
R707	1-216-045-00	METAL CHIP	680	5%	1/10W	
R708	1-216-065-00	METAL CHIP	4.7K	5%	1/10W	
R709	1-216-295-91	CONDUCTOR, CHIP (2012)				
R710	1-216-045-00	METAL CHIP	680	5%	1/10W	
R711	1-216-065-00	METAL CHIP	4.7K	5%	1/10W	
R712	1-216-295-91	CONDUCTOR, CHIP (2012)				
R713	1-216-045-00	METAL CHIP	680	5%	1/10W	
R714	1-216-065-00	METAL CHIP	4.7K	5%	1/10W	
R715	1-216-013-00	METAL CHIP	33	5%	1/10W	
R716	1-216-045-00	METAL CHIP	680	5%	1/10W	
R717	1-216-065-00	METAL CHIP	4.7K	5%	1/10W	
R718	1-216-013-00	METAL CHIP	33	5%	1/10W	
R719	1-216-045-00	METAL CHIP	680	5%	1/10W	
R720	1-216-065-00	METAL CHIP	4.7K	5%	1/10W	
R739	1-216-073-00	METAL CHIP	10K	5%	1/10W	

The components identified by mark ⚠ or dotted line with mark ⚠ are critical for safety. Replace only with part number specified.	Les composants identifiés par une marque ⚠ sont critiques pour la sécurité. Ne les remplacer que par une piéce portant le numéro spécifié.

Ref. No.	Part No.	Description			Remark
R740	1-216-073-00	METAL CHIP	10K	5%	1/10W
R741	1-216-073-00	METAL CHIP	10K	5%	1/10W
R742	1-216-073-00	METAL CHIP	10K	5%	1/10W
R743	1-216-073-00	METAL CHIP	10K	5%	1/10W
R744	1-216-073-00	METAL CHIP	10K	5%	1/10W
R745	1-216-073-00	METAL CHIP	10K	5%	1/10W
R746	1-216-073-00	METAL CHIP	10K	5%	1/10W
R747	1-216-073-00	METAL CHIP	10K	5%	1/10W
R748	1-216-073-00	METAL CHIP	10K	5%	1/10W
R749	1-216-073-00	METAL CHIP	10K	5%	1/10W
R750	1-216-073-00	METAL CHIP	10K	5%	1/10W
R751	1-216-073-00	METAL CHIP	10K	5%	1/10W
R752	1-216-073-00	METAL CHIP	10K	5%	1/10W
R753	1-216-073-00	METAL CHIP	10K	5%	1/10W
R754	1-216-073-00	METAL CHIP	10K	5%	1/10W
R767	1-216-069-91	METAL CHIP	6.8K	5%	1/10W
R768	1-216-069-91	METAL CHIP	6.8K	5%	1/10W
R769	1-216-069-91	METAL CHIP	6.8K	5%	1/10W
R770	1-216-069-91	METAL CHIP	6.8K	5%	1/10W
R771	1-216-069-91	METAL CHIP	6.8K	5%	1/10W
R772	1-216-069-91	METAL CHIP	6.8K	5%	1/10W

****

*	1-664-280-11	VOL BOARD *********			
		< CAPACITOR >			
C256	1-136-165-00	FILM	0.1uF	5%	50V
		< CONNECTOR >			
CN207	1-691-769-21	PLUG (MICRO CONNECTOR) 7P			
		< VARIABLE RESISTOR >			
RV251	1-225-434-11	RES, VAR (WITH MOTOR) 10K/10K (MASTER VOL)			

****

		MISCELLANEOUS **********
13	1-773-232-11	WIRE (FLAT TYPE)(25 CORE)
19	1-769-077-31	LEAD (WITH CONNECTOR)(2 CORE)(US,CND)
19	1-769-078-51	LEAD (WITH CONNECTOR)(2 CORE)
⚠62	1-559-479-11	CORD, POWER (US,CND)
⚠62	1-776-095-11	CORD, POWER (AEP,E,MY,SP,CH)
FL251	1-517-645-11	INDICATOR TUBE, FLUORESCENT
⚠T1	1-431-188-11	TRANSFORMER, POWER (US,CND)
⚠T1	1-431-189-11	TRANSFORMER, POWER (E,MY,SP,CH)
⚠T1	1-431-190-11	TRANSFORMER, POWER (AEP)

****

Ref. No.	Part No.	Description	Remark
		ACCESSORIES & PACKING MATERIALS **********	
	1-473-988-11	REMOTE COMMANDER (RM-EP9ES)	
⚠	1-569-008-11	ADAPTOR, CONVERSION 2P (E,MY,SP,CH)	
	1-590-925-31	CORD, CONNECTION	
	3-859-365-11	MANUAL, INSTRUCTION (ENGLISH,FRENCH)(US,CND,E,MY,SP,CH)	
	3-859-365-21	MANUAL, INSTRUCTION (SPANISH,CHINESE)(E,MY,SP,CH)	
	3-859-365-31	MANUAL, INSTRUCTION (ENGLISH,FRENCH,SPANISH,PORTUGUESE)(AEP)	
	3-859-365-41	MANUAL, INSTRUCTION (GERMAN,DUTCH,SWEDISH,ITALIAN)(AEP)	
	4-981-643-01	COVER, BATTERY (For RM-EP9ES)	

****

		********** HARDWARE LIST **********
#1	7-621-773-95	SCREW +B 2.6X6
#2	7-685-880-09	SCREW +BVTT 4X6 (S)
#3	7-685-650-79	SCREW +BVTP 3X16 TYPE2 IT-3
#4	7-682-548-09	SCREW (3X8)

The components identified by mark ⚠ or dotted line with mark ⚠ are critical for safety. Replace only with part number specified.	Les composants identifiés par une marque ⚠ sont critiques pour la sécurité. Ne les remplacer que par une piéce portant le numéro spécifié.

9-960-860-11

Sony Corporation
Home A&V Products Company

97A0984-1
Printed in Japan
Published by Service and Safety Engineering Dept. (Shibaura)

SDP-EP9ES

SONY

SERVICE MANUAL

US Model
Canadian Model
AEP Model
E Model
Chinese Model

SUPPLEMENT-1

File this supplement with the service manual.

Subject : 1. CORRECTION
2. AC1 BOARD CHANGED
3. BOARD CHANGED
4. PARTS CHANGED

(ECN-TA700492)

1. CORRECTION

: indicates corrected portion

Page	INCORRECT						CORRECT					
	Ref. No.	Part No.	Description			Remark	Ref. No.	Part No.	Description			Remark
67			*** EXPLODED VIEWS ***						*** EXPLODED VIEWS ***			
	* 16	1-664-280-61	VOL BOARD				* 16	1-664-280-11	VOL BOARD			
	19	1-769-077-31	LEAD (WITH CONNECTOR) (2 CORE)				19	1-769-077-31	LEAD (WITH CONNECTOR) (2 CORE) (US, CND)			
	19	1-769-078-51	LEAD (WITH CONNECTOR) (2 CORE)				19	1-769-078-51	LEAD (WITH CONNECTOR) (2 CORE) (EXCEPT US, CND)			
70			*** DISPLAY BOARD ***						*** DISPLAY BOARD ***			
			———				R281	1-249-421-11	CARBON	2.2K	5%	1/2W F
			———				R282	1-249-421-11	CARBON	2.2K	5%	1/2W F
			———				R283	1-249-421-11	CARBON	2.2K	5%	1/2W F
			———				R284	1-249-421-11	CARBON	2.2K	5%	1/2W F
			———				R285	1-249-421-11	CARBON	2.2K	5%	1/2W F
75			*** MAIN BOARD ***						*** MAIN BOARD ***			
			———				R414	1-216-033-00	METAL GLAZE	220	5%	1/10W
77			———				R644	1-259-995-11	CARBON MELF	1K	2%	1/8W
	R643	1-259-995-11	CARBON MELF	1K	2%	1/8W	R643	1-259-936-11	CARBON MELF	13K	2%	1/8W
81			*** MISCELLANEOUS ***						*** MISCELLANEOUS ***			
	19	1-769-078-51	LEAD (WITH CONNECTOR) (2 CORE)				19	1-769-078-51	LEAD (WITH CONNECTOR) (2 CORE) (EXCEPT US, CND)			

• Abbreviation
CND : Canadian model

2. AC1 BOARD CHANGED

For units with serial numbers 800001 to 801500, always disconnect the power plug from the outlet before beginning repairs, because repairs performed with the power plug connected and the power switch off may lead to electrical hazards.
This problem has been solved for units with serial numbers 901500 onwards by changing boards.
The following are the units which have been changed their boards.

– POWER SECTION –

Location: A–D, 1–9

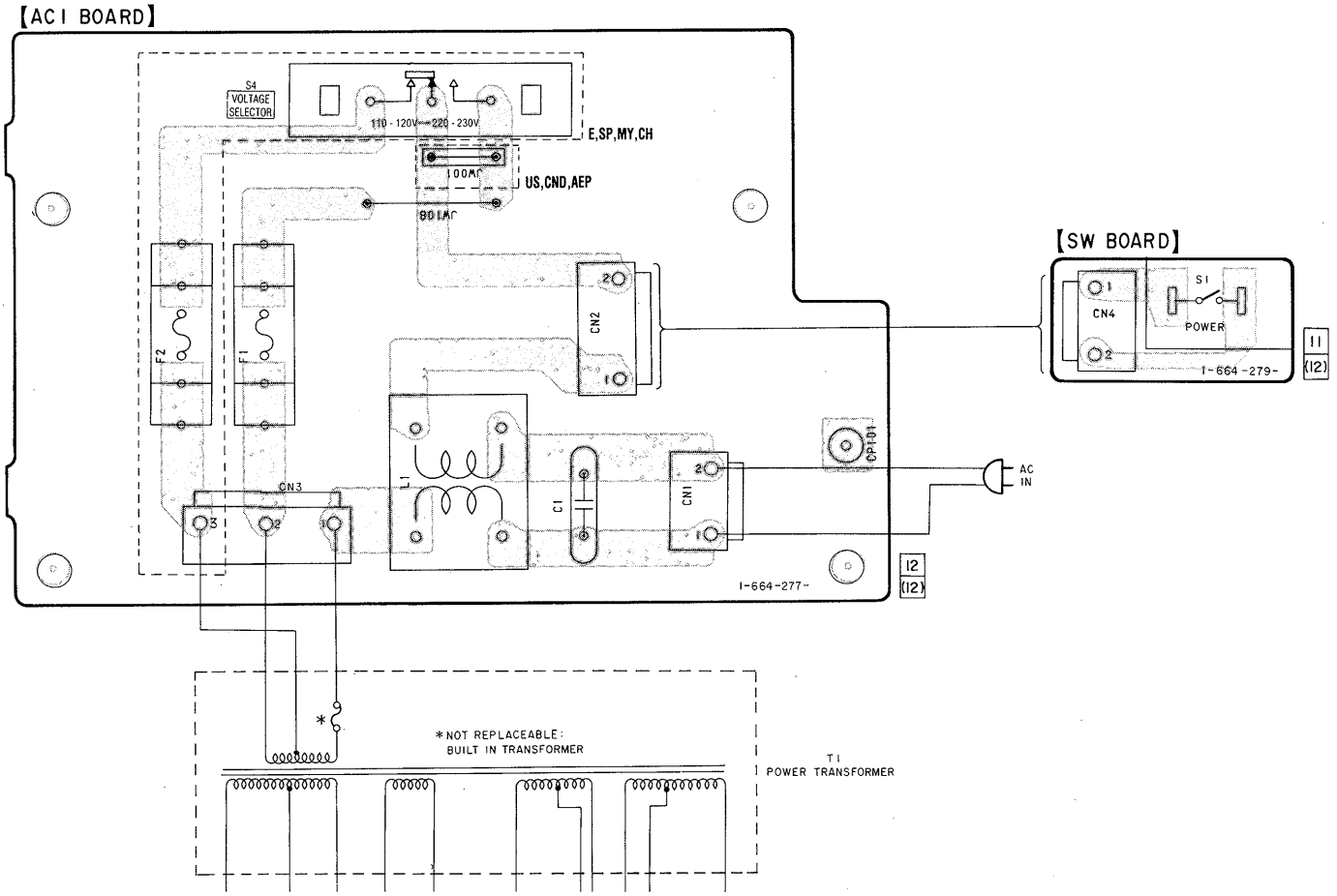

• Abbreviation
CND : Canadian model
MY : Malaysia model
SP : Singapore model
CH : Chinese model

– POWER SECTION –

Location: B–G, 10–13

: indicates changed portion.

• Abbreviation
CND : Canadian model
MY : Malaysia model
SP : Singapore model
CH : Chinese model

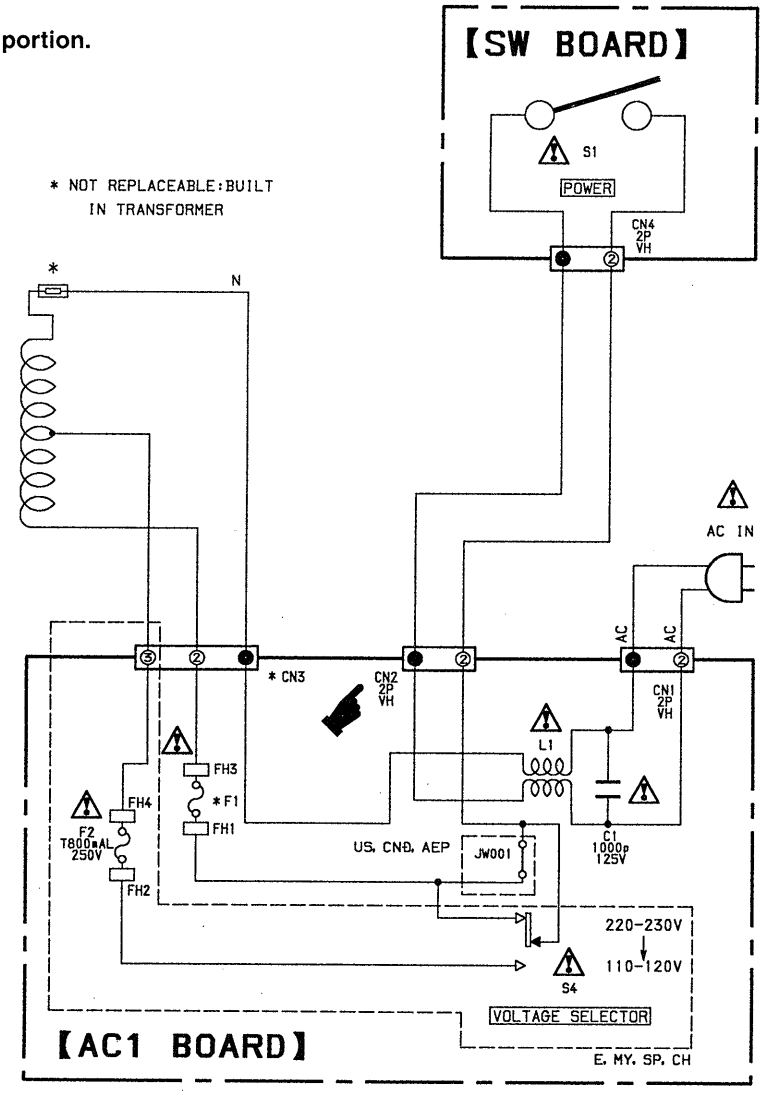

3. BOARD CHANGED

: indicates changed portion.

Page	FORMER	NEW
27	**[MAIN BOARD] (SIDE B)** Location: K–L, 21–23 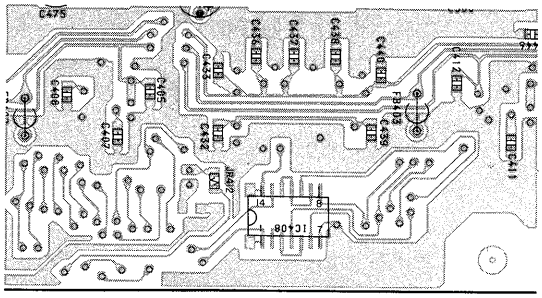 11 1-664-274-(11)	**[MAIN BOARD] (SIDE B)** Location: K–L, 21–23 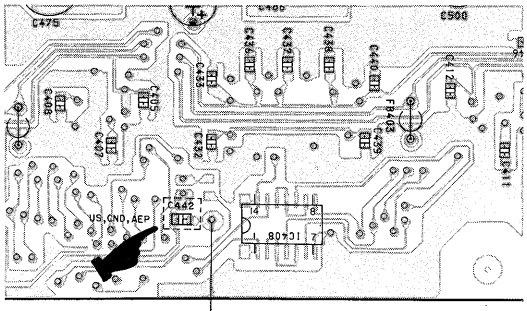 12 1-664-274-(12)

• Abbreviation
CND : Canadian model
MY : Malaysia model
SP : Singapore model
CH : Chinese model

☛ : indicates changed portion.

Page	FORMER	NEW
28	**[MAIN BOARD] (SIDE B)** Location: C–E, 26–30 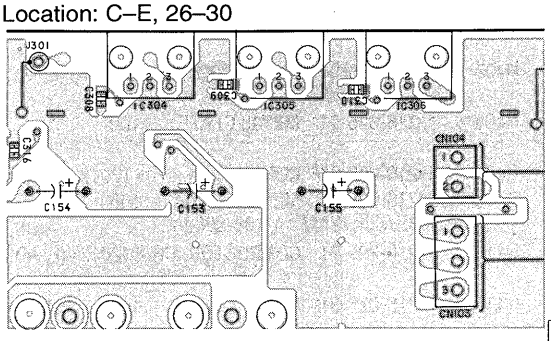 11 1-664-274-(11)	**[MAIN BOARD] (SIDE B)** Location: C–E, 26–30 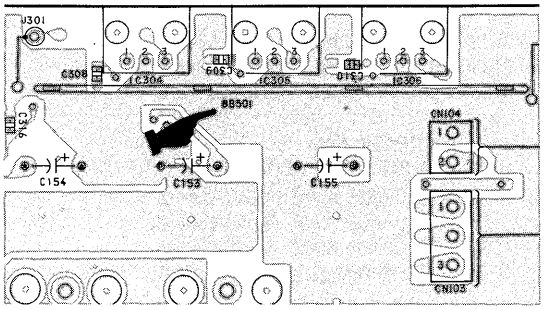 12 1-664-274-(12)
37	**[MAIN BOARD (3/3)]** Location: M–O, 18–20 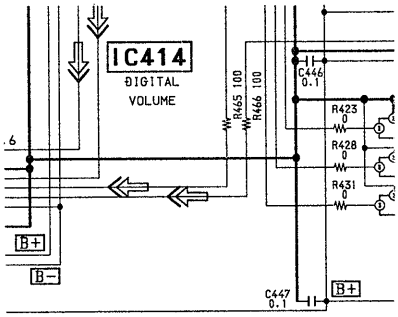 	**[MAIN BOARD (3/3)]** Location: M–O, 18–20 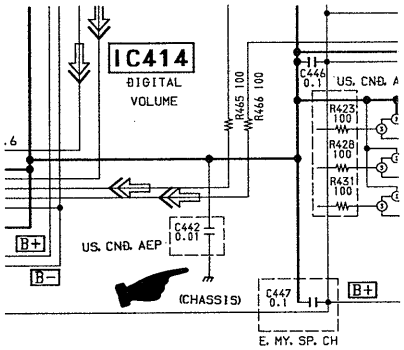

Page	NEW
26	**[MAIN BOARD] (SIDE A)** Location: H–L, 9–15 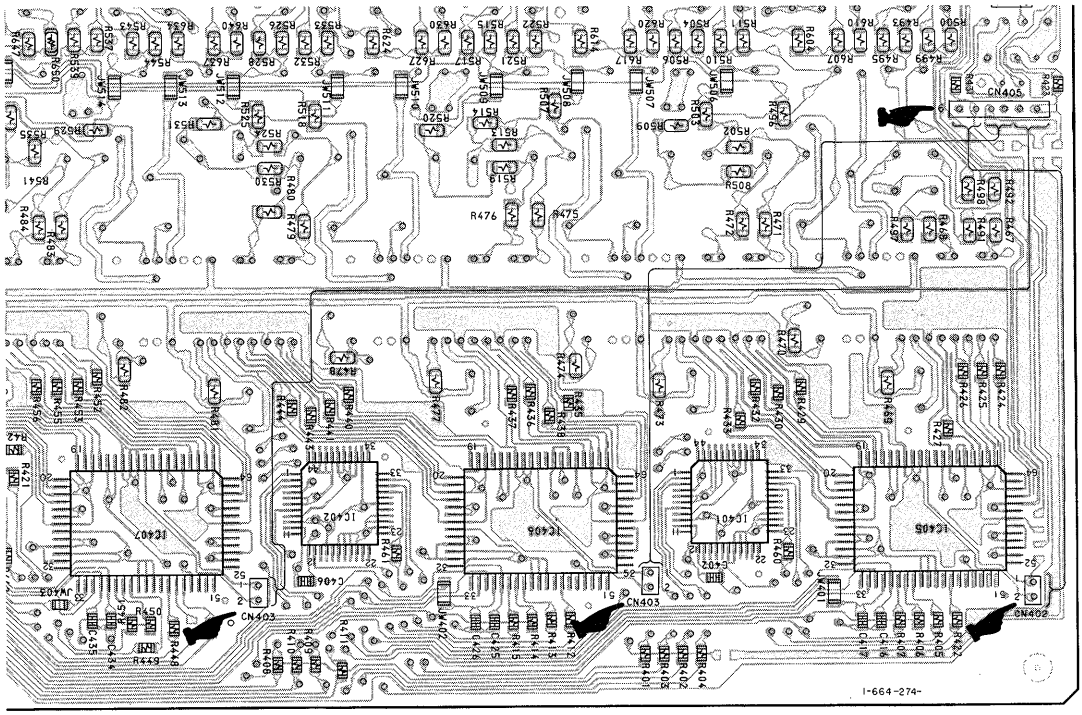 12 (12)

• Abbreviation
CND : Canadian model
MY : Malaysia model
SP : Singapore model
CH : Chinese model

: indicates changed portion.

Page	NEW
27	Location: A–B, 24–31 【TR BOARD】(SIDE A) 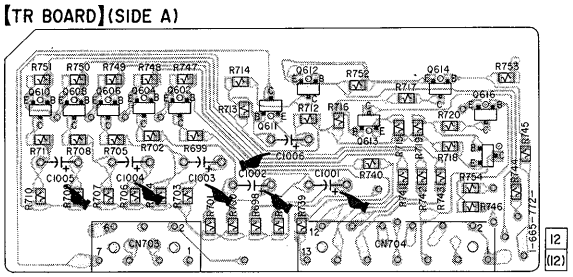 【TR BOARD】(SIDE B) 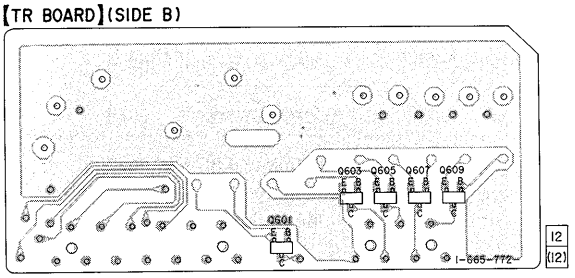
29	Location: B–F, 2–8 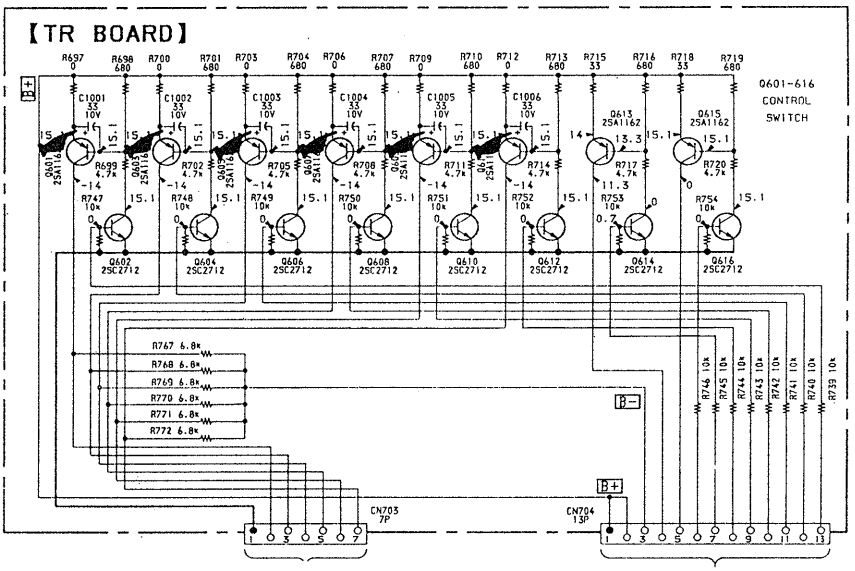
37	**[MAIN BOARD (3/3)]** Location: M–P, 15–21 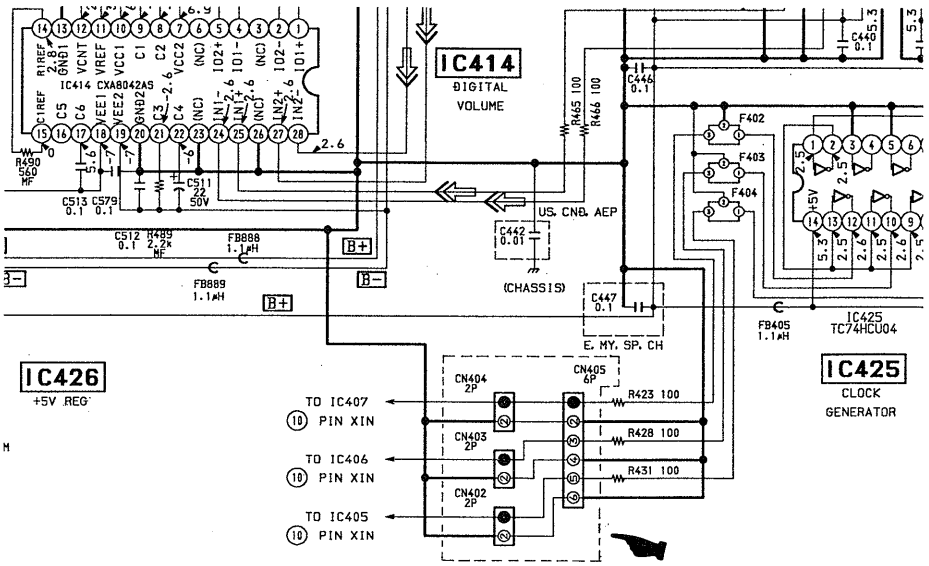

• Abbreviation
CND : Canadian model
MY : Malaysia model
SP : Singapore model
CH : Chinese model

4. PARTS CHANGED

: indicates changed portion.

Page	FORMER					NEW					
	Ref. No.	Part No.	Description		Remark	Ref. No.	Part No.	Description			Remark
68			*** EXPLODED VIEWS ***					*** EXPLODED VIEWS ***			
	* 59	A-4392-301-A	MAIN BOARD, COMPLETE			* 59	A-4392-301-A	MAIN BOARD, COMPLETE (E, MY, SP, CH)			
						* 59	A-4403-073-A	MAIN BOARD, COMPLETE (US, CND)			
						* 59	A-4403-075-A	MAIN BOARD, COMPLETE (AEP)			
70			*** MAIN BOARD ***					*** MAIN BOARD ***			
		A-4392-301-A	MAIN BOARD, COMPLETE				A-4403-073-A	MAIN BOARD, COMPLETE (US, CND)			
							A-4403-075-A	MAIN BOARD, COMPLETE (AEP)			
							A-4392-301-A	MAIN BOARD, COMPLETE (E, MY, SP, CH)			
						BB301	1-560-242-21	BUS BAR 4P			
71						C442	1-164-232-11	CERAMIC CHIP	0.01μF	50V	(US, CND, AEP)
	C447	1-165-319-11	CERAMIC CHIP	0.1μF	50V	C447	1-165-319-11	CERAMIC CHIP	0.1μF	50V	(E, MY, SP, CH)
73	C911	1-163-239-11	CERAMIC CHIP	33PF 5%	50V	C911	1-163-241-11	CERAMIC CHIP	39PF 5%	50V	
	C912	1-129-967-11	ELECT	47μF 20%	50V	C912	1-107-701-11	ELECT	47μF 20%	10V	(US, CND, AEP)
						C912	1-129-967-11	ELECT	47μF 20%	50V	(E, MY, SP, CH)
74	IC301	8-759-446-39	IC LC8905V			IC301	8-759-326-72	IC CXD8521M			
	IC302	8-759-240-80	IC TC74HC153AF			IC302	8-759-926-17	IC SN74HC153ANS (US, CND, AEP)			
						IC302	8-759-240-80	IC TC74HC153AF (E, MY, SP, CH)			
	J301	1-764-413-11	JACK, PIN (DIGITAL 4 INPUT)			J301	1-568-750-21	JACK, PIN (1P SHIELD TYPE)			(DIGITAL 4 INPUT)
	J901	1-779-491-11	JACK, PIN 1P (BLK) (AC-3 RF INPUT)			J901	1-779-734-11	JACK, PIN 1P (BCK) (AC-3 RF INPUT)			
	JR401	1-216-295-91	CONDUCTOR, CHIP (2012)								
	JR403	1-216-295-91	CONDUCTOR, CHIP (2012)								
	JR404	1-216-295-91	CONDUCTOR, CHIP (2012)								
	JR405	1-216-295-91	CONDUCTOR, CHIP (2012)								
	JR407	1-216-295-91	CONDUCTOR, CHIP (2012)								
	JR410	1-216-295-91	CONDUCTOR, CHIP (2012)								
	JR412	1-216-295-91	CONDUCTOR, CHIP (2012)								
75	R306	1-216-053-00	METAL CHIP	1.5K 5%	1/10W	R306	1-216-065-00	METAL CHIP	4.7K 5%	1/10W	
	R401	1-216-295-91	CONDUCTOR, CHIP (2012)			R401	1-216-025-91	METAL GLAZE	100 5%	1/10W	(US, CND, AEP)
						R401	1-216-295-91	CONDUCTOR, CHIP (2012)			(E, MY, SP, CH)
	R402	1-216-295-91	CONDUCTOR, CHIP (2012)			R402	1-216-025-91	METAL GLAZE	100 5%	1/10W	(US, CND, AEP)
						R402	1-216-295-91	CONDUCTOR, CHIP (2012)			(E, MY, SP, CH)
	R403	1-216-295-91	CONDUCTOR, CHIP (2012)			R403	1-216-025-91	METAL GLAZE	100 5%	1/10W	(US, CND, AEP)
						R403	1-216-295-91	CONDUCTOR, CHIP (2012)			(E, MY, SP, CH)
	R404	1-216-295-91	CONDUCTOR, CHIP (2012)			R404	1-216-025-91	METAL GLAZE	100 5%	1/10W	(US, CND, AEP)
						R404	1-216-295-91	CONDUCTOR, CHIP (2012)			(E, MY, SP, CH)
	R405	1-216-295-91	CONDUCTOR, CHIP (2012)			R405	1-216-025-91	METAL GLAZE	100 5%	1/10W	(US, CND, AEP)
						R405	1-216-295-91	CONDUCTOR, CHIP (2012)			(E, MY, SP, CH)
	R406	1-216-295-91	CONDUCTOR, CHIP (2012)			R406	1-216-025-91	METAL GLAZE	100 5%	1/10W	(US, CND, AEP)
						R406	1-216-295-91	CONDUCTOR, CHIP (2012)			(E, MY, SP, CH)
	R407	1-216-295-91	CONDUCTOR, CHIP (2012)			R407	1-216-025-91	METAL GLAZE	100 5%	1/10W	(US, CND, AEP)
						R407	1-216-295-91	CONDUCTOR, CHIP (2012)			(E, MY, SP, CH)

• Abbreviation
CND : Canadian model
MY : Malaysia model
SP : Singapore model
CH : Chinese model

Page	FORMER				NEW			
	Ref. No.	Part No.	Description	Remark	Ref. No.	Part No.	Description	Remark
75	R408	1-216-295-91	CONDUCTOR, CHIP (2012)		R408	1-216-025-91	METAL GLAZE 100 5% 1/10W	(US, CND, AEP)
					R408	1-216-295-91	CONDUCTOR, CHIP (2012)	(E, MY, SP, CH)
	R409	1-216-295-91	CONDUCTOR, CHIP (2012)		R409	1-216-025-91	METAL GLAZE 100 5% 1/10W	(US, CND, AEP)
					R409	1-216-295-91	CONDUCTOR, CHIP (2012)	(E, MY, SP, CH)
	R410	1-216-295-91	CONDUCTOR, CHIP (2012)		R410	1-216-025-91	METAL GLAZE 100 5% 1/10W	(US, CND, AEP)
					R410	1-216-295-91	CONDUCTOR, CHIP (2012)	(E, MY, SP, CH)
	R411	1-216-295-91	CONDUCTOR, CHIP (2012)		R411	1-216-025-91	METAL GLAZE 100 5% 1/10W	(US, CND, AEP)
					R411	1-216-295-91	CONDUCTOR, CHIP (2012)	(E, MY, SP, CH)
	R416	1-216-295-91	CONDUCTOR, CHIP (2012)		R416	1-216-025-91	METAL GLAZE 100 5% 1/10W	(US, CND, AEP)
					R416	1-216-295-91	CONDUCTOR, CHIP (2012)	(E, MY, SP, CH)
	R417	1-216-295-91	CONDUCTOR, CHIP (2012)		R417	1-216-025-91	METAL GLAZE 100 5% 1/10W	(US, CND, AEP)
					R417	1-216-295-91	CONDUCTOR, CHIP (2012)	(E, MY, SP, CH)
	R418	1-216-295-91	CONDUCTOR, CHIP (2012)		R418	1-216-025-91	METAL GLAZE 100 5% 1/10W	(US, CND, AEP)
					R418	1-216-295-91	CONDUCTOR, CHIP (2012)	(E, MY, SP, CH)
	R419	1-216-295-91	CONDUCTOR, CHIP (2012)		R419	1-216-025-91	METAL GLAZE 100 5% 1/10W	(US, CND, AEP)
					R419	1-216-295-91	CONDUCTOR, CHIP (2012)	(E, MY, SP, CH)
76	R423	1-216-295-91	CONDUCTOR, CHIP (2012)		R423	1-216-025-91	METAL GLAZE 100 5% 1/10W	
	R428	1-216-295-91	CONDUCTOR, CHIP (2012)		R428	1-216-025-91	METAL GLAZE 100 5% 1/10W	
	R431	1-216-295-91	CONDUCTOR, CHIP (2012)		R431	1-216-025-91	METAL GLAZE 100 5% 1/10W	
	R449	1-216-295-91	CONDUCTOR, CHIP (2012)		R449	1-216-025-91	METAL GLAZE 100 5% 1/10W	(US, CND, AEP)
					R449	1-216-295-91	CONDUCTOR, CHIP (2012)	(E, MY, SP, CH)
	R450	1-216-295-91	CONDUCTOR, CHIP (2012)		R450	1-216-025-91	METAL GLAZE 100 5% 1/10W	(US, CND, AEP)
					R450	1-216-295-91	CONDUCTOR, CHIP (2012)	(E, MY, SP, CH)
	R451	1-216-295-91	CONDUCTOR, CHIP (2012)		R451	1-216-025-91	METAL GLAZE 100 5% 1/10W	(US, CND, AEP)
					R451	1-216-295-91	CONDUCTOR, CHIP (2012)	(E, MY, SP, CH)
77	R560	1-216-295-91	CONDUCTOR CHIP (2012)		R560	1-216-025-91	METAL GLAZE 100 5% 1/10W	(US, CND, AEP)
					R560	1-216-295-91	CONDUCTOR, CHIP (2012)	(E, MY, SP, CH)
	R561	1-216-295-91	CONDUCTOR CHIP (2012)		R561	1-216-025-91	METAL GLAZE 100 5% 1/10W	(US, CND, AEP)
					R561	1-216-295-91	CONDUCTOR, CHIP (2012)	(E, MY, SP, CH)
	R562	1-216-295-91	CONDUCTOR CHIP (2012)		R562	1-216-025-91	METAL GLAZE 100 5% 1/10W	(US, CND, AEP)
					R562	1-216-295-91	CONDUCTOR, CHIP (2012)	(E, MY, SP, CH)
79	RV301	1-241-393-21	RES, ADJ, METAL GLAZE 2.2K		———			
80	———				C1001	1-124-229-00	ELECT 33μF 20% 10V	
	———				C1002	1-124-229-00	ELECT 33μF 20% 10V	
	———				C1003	1-124-229-00	ELECT 33μF 20% 10V	
	———				C1004	1-124-229-00	ELECT 33μF 20% 10V	
	———				C1005	1-124-229-00	ELECT 33μF 20% 10V	
	———				C1006	1-124-229-00	ELECT 33μF 20% 10V	

9-960-860-82

Sony Corporation
Home A&V Products Company

97I0985-1
Printed in Japan © 1997. 9
Published by General Engineering Dept.
(Shibaura)