PIONEER®
The future of sound and vision.

Service Manual

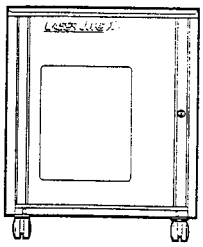

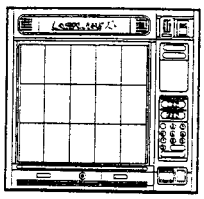

ORDER NO.
ARP1610

SELECTION COMMANDER

LJ-V20
LJ-V20-K

VIDEO DISC AUTOCHANGER

LC-V20
LC-V20-K

● Selection commander LJ−V20 or LJ−V20−K and video disc autochanger LC−V20 or LC−V20−K operate in conjunction.
One video disc autochanger LC−V20 or LC−V20−K will handle up to three selection commanders LJ−V20 or LJ−V20−K.

MODELS LC−V20, LJ−V20, LC−V20−K AND LJ−V20−K HAVE TWO VERSIONS:

Type	Applicable model				Power requirement	Export destination
	LC-V20	LJ-V20	LC-V20-K	LJ-V20-K		
HEM	○	−	○	−	AC220V,240V (switchable)	European continent
AEM	−	○	−	○	AC22V only	European continent

- This service manual is applicable to the HEM and AEM types.
- For the LC−V20−K type, refer to page 138.
- For the LJ−V20−K type, refer to page 137.
- The LC−V20−K is the same as the LC−V20 except for the color.
- The LJ−V20−K is the same as the LJ−V20 except for the color.
- Ce manuel pour le service comprend les explications en français de réglage.
- Este manual de servicio trata del método ajuste escrito en español.

PIONEER ELECTRONIC CORPORATION 4-1, Meguro 1-Chome, Meguro-ku, Tokyo 153, Japan
PIONEER ELECTRONICS SERVICE INC. P.O. Box 1760, Long Beach, California 90801 U.S.A.
PIONEER ELECTRONICS OF CANADA, INC. 505 Cochrane Drive, Markham, Ontario L3R 8E3 Canada
PIONEER ELECTRONIC [EUROPE] N.V. Keetberglaan 1, 2740 Beveren, Belgium
PIONEER ELECTRONICS AUSTRALIA PTY. LTD. 178-184 Boundary Road, Braeside, Victoria 3195, Australia TEL: [03] 580-9911
© PIONEER ELECTRONIC CORPORATION 1988
IFI JULY.1988 Printed in Japan

CONTENTS

1. SAFETY INFORMATION 2
2. SELECTION COMMANDER/LJ-V20 4
2.1 PARTS LOCATION 4
2.2 EXPLODED VIEWS AND PARTS LIST 6
2.3 SCHEMATIC DIAGRAM 12
2.4 P.C. BOARDS PATTERN 15
2.5 ELECTRICAL PARTS LIST 17
3. VIDEO DISC AUTOCHANGER/LC-V20 18
3.1 PARTS LOCATION 18
3.2 EXPLODED VIEWS AND PARTS LIST 21
3.3 SCHEMATIC DIAGRAM AND P.C. BOARDS PATTERN 45
3.4 ELECTRICAL PARTS LIST 95
3.5 ADJUSTMENT 101
3.5 RÉGLAGE 109
3.5 AJUSTE 117
3.6 DISASSEMBLY 125
3.7 SERVICE MODE 132
4. FOR LJ-V20-K/AEM TYPE 137
5. FOR LC-V20-K/HEM TYPE 138
6. SPECIFICATIONS 139
7. PANEL FACILITIES 140

1. SAFETY INFORMATION

ADVARSEL!
Lithiumbatteri. Eksplosionsfare. Udskiftning må kun foretages af en sagkyndig, og som beskrevet i servicemanualen.

Denne advarsel or angivet på produktet eller i brugsvejledningen. Ved udskiftning af lithium batterierne følges nedenstående anveisning. Batterierne må kun udskiftes med batterier af samme type og mærke.

WARNING!
Lithium batteries. Danger of explosion. Replacement must be done by qualified personnel and only by following the instructions given in the service manual.

This warning is stated on the product or in the operating instructions. When replacing the lithium batteries, follow the note below. The batteries must be replaced only by batteries of the same type and manufacture.

VAROITUS!
Litiumparistot. Räjähdysvaara. Vaihdon saa suorittaa ainoastaan asiantunteva huoltoteknikko noudattamalla huolto-ohjeessa annettuja ohjeita.

Tämä varoitus sijaitsee laitteessa tai käyttöohjeessa. Noudata litiumparistoja vaihtaessasi alla olevaa huomautusta. Paristot on vaihdettava samantyyppisiin ja saman tehtaan valmistamiin paristoihin.

(FOR EUROPEAN MODEL ONLY)

VAROITUS!
LAITE SISALTAA LASERDIODIN, JOKA LAHETTAA NAKYMATONTA, SILMILLE VAARALLISTA INFRAPUNASATEILYA LAITTEEN SISALLA ON LASERDIODIN LAHEISYYDESSA KUVAN 1. MUKAINEN VAROITUSMERKKI.

LASER
Kuva 1
Lasersateilyn varoitusmerkki

WARNING!
DEVICE INCLUDES LASER DIODE WHICH EMITS INVISIBLE INFRARED RADIATION WHICH IS DANGEROUS TO EYES. THERE IS A WARNING SIGN ACCORDING TO PICTURE 1 INSIDE THE DEVICE CLOSE TO THE LASER DIODE.

LASER
Picture 1
Warning sign for laser radiation

ADVERSEL:
USYNLIG LASERSTRÅLING VED ÅBNING NÅR SIKKERHEDSAFBRYDERE ER UDE AF FUNKTION UNDGÅ UDSAETTELSE FOR STRÅLING.

IMPORTANT
THIS PIONEER APPARATUS CONTAINS LASER OF HIGHER CLASS THAN 1. SERVICING OPERATION OF THE APPARATUS SHOULD BE DONE BY A SPECIALLY INSTRUCTED PERSON.

VIKTIGT
APARATEN INNEHÅLLER LASER AV HÖGRE KLASS ÄN 1. INGREPP I APPARATEN BÖR GÖRAS AV SPECIELLT UTBILDAD PERSONAL.

LABEL CHECK

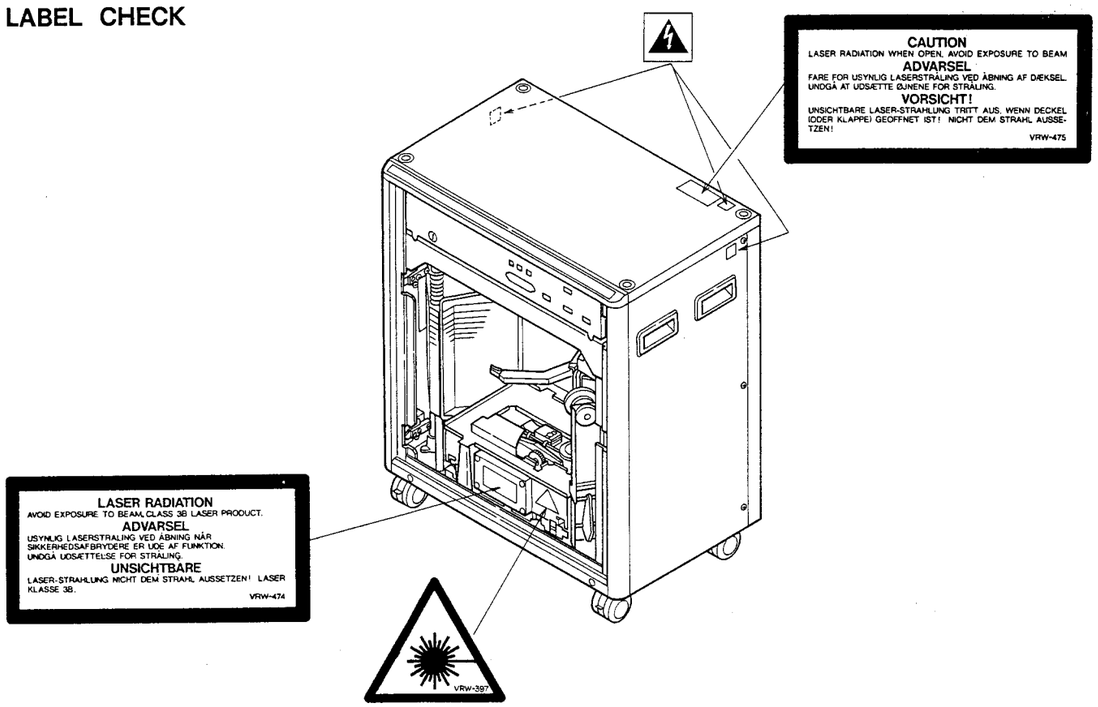

2. SELECTION COMMANDER/LJ – V20

2.1 PARTS LOCATION

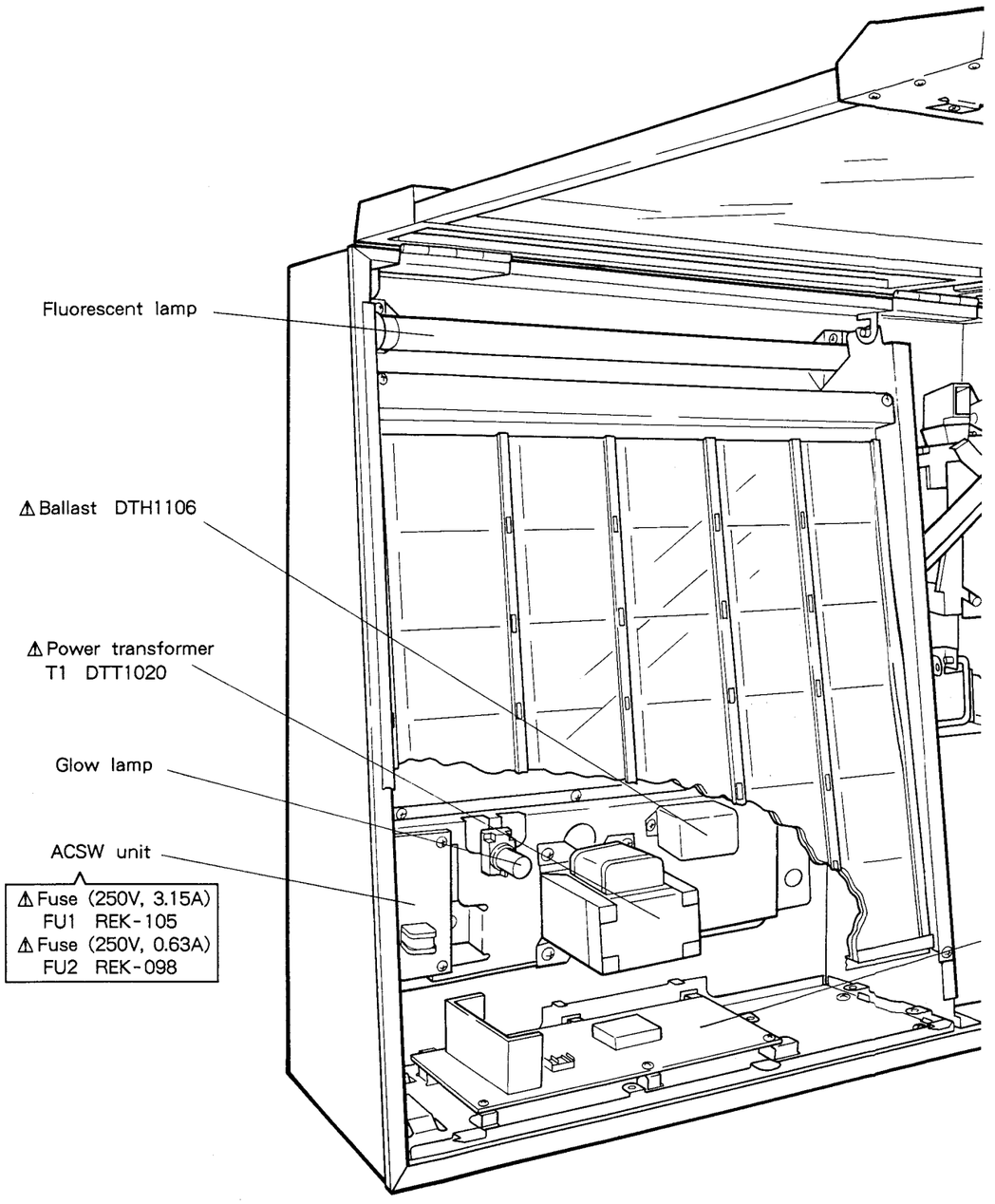

ON
VOID EXPOSURE TO BEAM
EL
G VED ÅBNING AF DÆKSEL.
STRÅLING.
HT!
TRITT AUS, WENN DECKEL
ICHT DEM STRAHL AUSSE-
VRW-475

2. SELECTION COMMANDER/LJ – V20

2.1 PARTS LOCATION

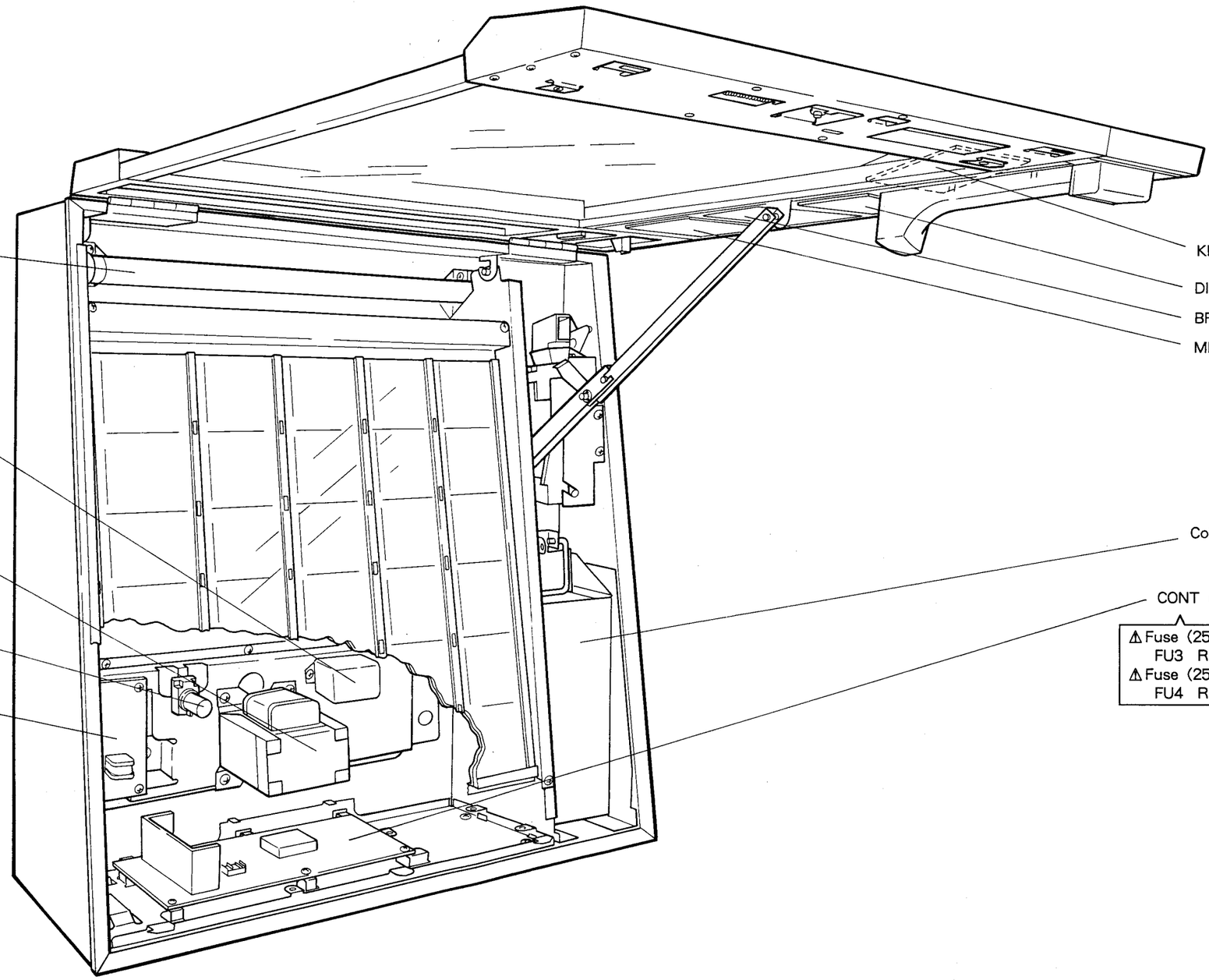

2.2 EXPLODED VIEWS AND PARTS LIST

2.2.1 EXTERIOR

NOTES :
- Parts without part number cannot be supplied.
- The ⚠ mark found on some component parts indicates the importance of the safety factor of the part. Therefore, when replacing, be sure to use parts of identical designation.
- Parts marked by "◉" are not always kept in stock. Their delivery time may be longer than usual or they may be unavailable.

Parts List

Mark	No.	Part No.	Description	Mark	No.	Part No.	Description
	1		• • • • •		106		Cord clamper
	2		• • • • •		107		CA holder A
	3	DBK1015	Acceptor plate spring		108		Socket hold plate
	4	DBH1037	CA spring		109		KS holder
	5	DKK1005	Fluorescent lamp socket L		110		Fluorescent lamp
	6	DKK1004	Fluorescent lamp socket R		111		Cord clamper
	7	DXB1069	Hinge		112		CH lever assembly A
	8	DKK1001	Glow lamp socket		113		CA holder C assembly
	9		• • • • •		114		• • • • •
⚠	10	REK-098	Fuse (630mA) (FU2)		115		Wood frame assembly
⚠	11	REK-105	Fuse (3.15A) (FU1)		116		RF holder
⚠	12	RED-098	Fuse (630mA) (FU3)		117		Stay A
⚠	13	REK-101	Fuse (1.25A) (FU4)		118		ACSW unit
⚠	14	DTT1020	Power transformer		119		Door stay A
⚠	15	DTH1106	Ballast		120		DS shaft B
◉	16	DWG1065	CONT unit		121		Door stay B
	17	DEC1120	Cord bushing		122		DS holder assembly
	18	DNK1226	Guide pin		123		Earth lag assembly
	19	DAN1003	MB glass		124		Cord holder
	20	DAH1178	Menu board		125		Stay B
	21	DNK1227	Menu presser		126		CB cushion
	22		• • • • •		127		MB clamper B
	23		• • • • •		128		Coin box assembly
	24	BBZ30P080FMC	Screw		129		CB holder
	25	BBZ40P080FMC	Screw		130		DS shaft A
	26	BBZ30P060FMC	Screw		131		Reflector
	27	DBA1007	Screw		132		Menu packing A
	28	PBZ30P120FMC	Screw		133		Reflector assembly R
	29	YE30FUC	E ring 3		134		Reflector assembly L
	30	RNH-184	Cord holder		135		MB clamper A
	101		CH lever B		136		Film
	102		• • • • •		137		Glow lamp
	103		Cord holder		138		Earth lag assemlby
	104		Throw guide				
	105		HL holder assembly A				

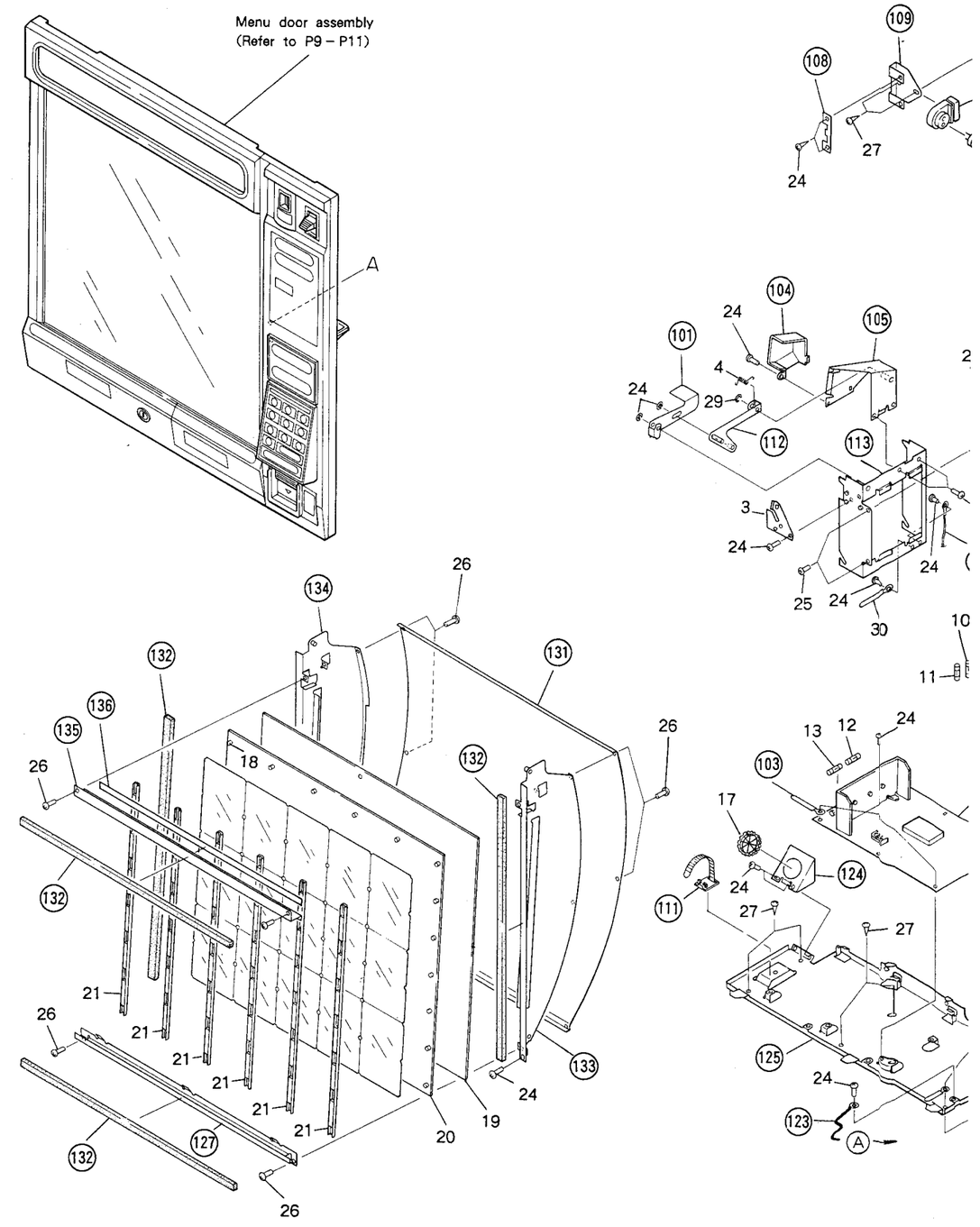

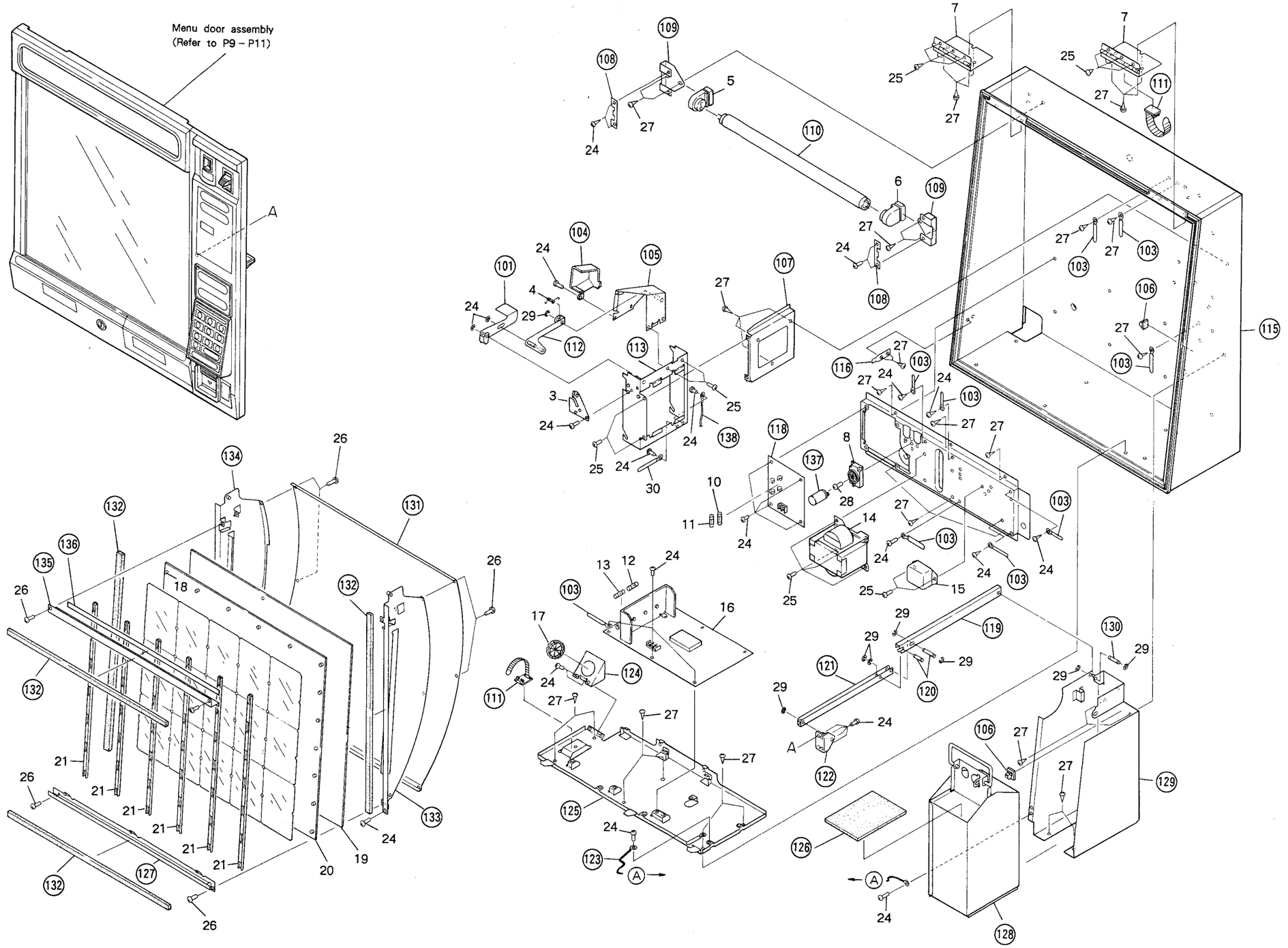
Menu door assembly
(Refer to P9 – P11)
A

2.2.2 MENU DOOR ASSEMBLY

Parts List

Mark	No.	Part No.	Description
	1	DAH1204	Sign board
	2	DNK1242	Electrical decoration panel
	3	DNK1247	Side panel
	4	DAN1004	Menu glass
	5	DNH1126	Lock release board
	6	DXA1075	Key panel assembly
	7	DAH1210	Name plate A
	8	DAH1211	Name plate B
	9	DAH1194	Name plate C
	10	DAH1195	Name plate D
	11	DBH1034	Lock spring
	12	DBH1038	Return lever spring
	13	DAD1001	Return lever
	14	DAH1208	Return lever sheet B
	15	DNS1044	Coin throw (HE)
	16	DNK1246	Operation panel
	17	DAH1229	Coin sheet
	18	DAH1207	Return lever sheet A
	19	DXX1154	Indication plate E/S
	20	DAH1233	Indication plate B
	21	DNK1236	Key knob A
	22	DNK1214	Key knob B
	23	DAH1230	Key sheet
	24	DNK1235	Return door
	25	DAH1186	Sheet
	26	BBZ40P080FMC	Screw
	27	BBZ30P080FMC	Screw
	28	BMZ30P060FMC	Screw
	29	DXX1152	Key
	30	DNH1146	Washer
	31	DXB1065	Key cylinder
	32	BBZ30P120FMC	Screw

Mark	No.	Part No.	Description
	101		Upper stay
	102		Glass packing A
	103		Glass packing B
	104		MG holder
	105		• • • • •
	106		Lock plate
	107		Plate spring
	108		Under stay assembly
	109		NESS unit
	110		BRAN unit
	111		DISP unit
	112		KEYB unit
	113		Coin guide A
	114		Coin guide C
	115		Coin guide B
	116		Return tray B
	117		Return tray A
	118		Earth lag assembly
	119		• • • • •
	120		Reinforcement plate
	121		Cord holder
	122		Cord holder
	123		Coin slit
	124		Glass presser plate

＊1 : Apply the froil GB-TS-1 (Z51-016)
＊2 : The portion of indicate "＊2" are put by the dia-bond # 1663 (ASCR-2663)

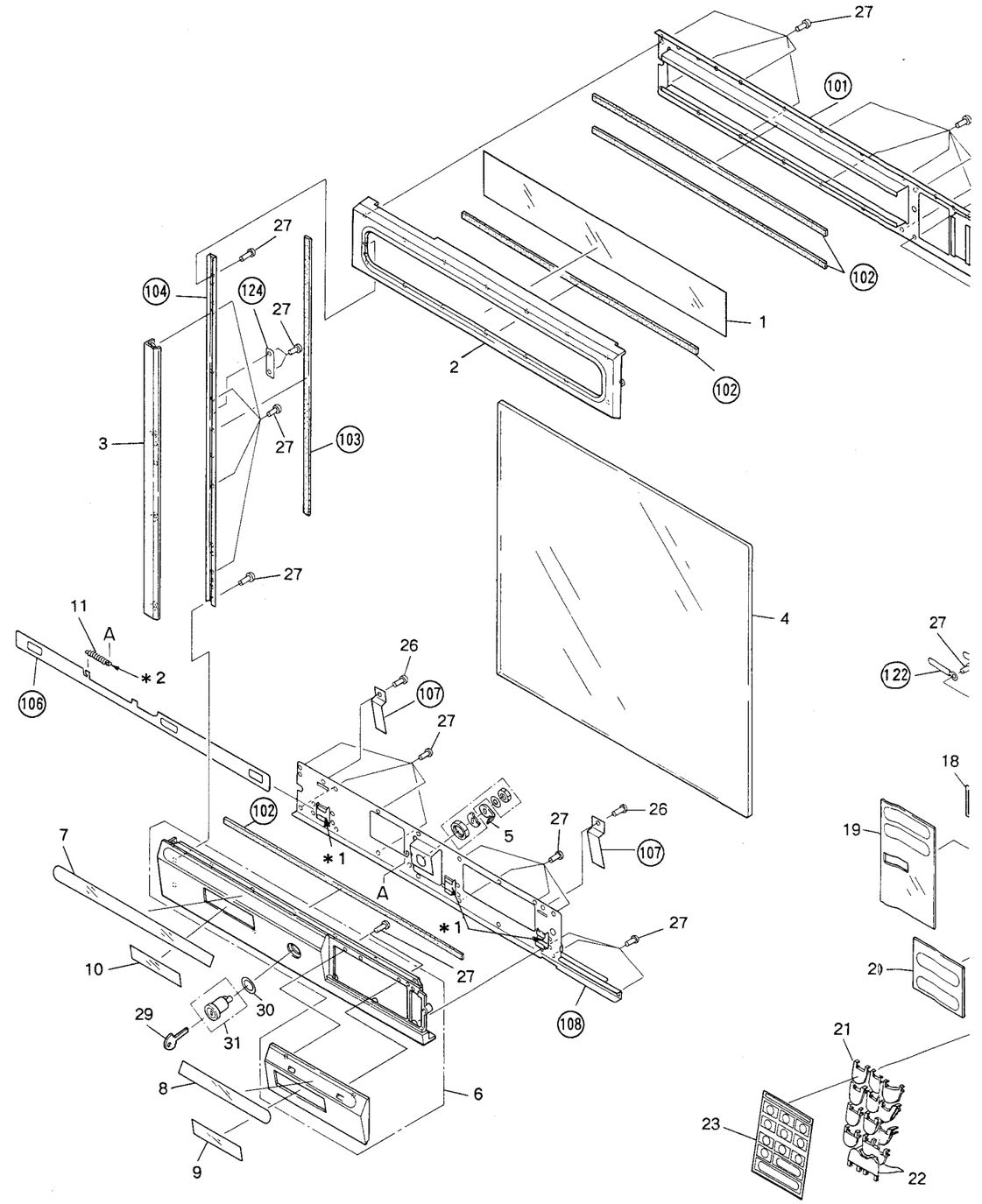

g A
g B

assembly

A
C
B

B
A
sembly

it plate

plate

by the

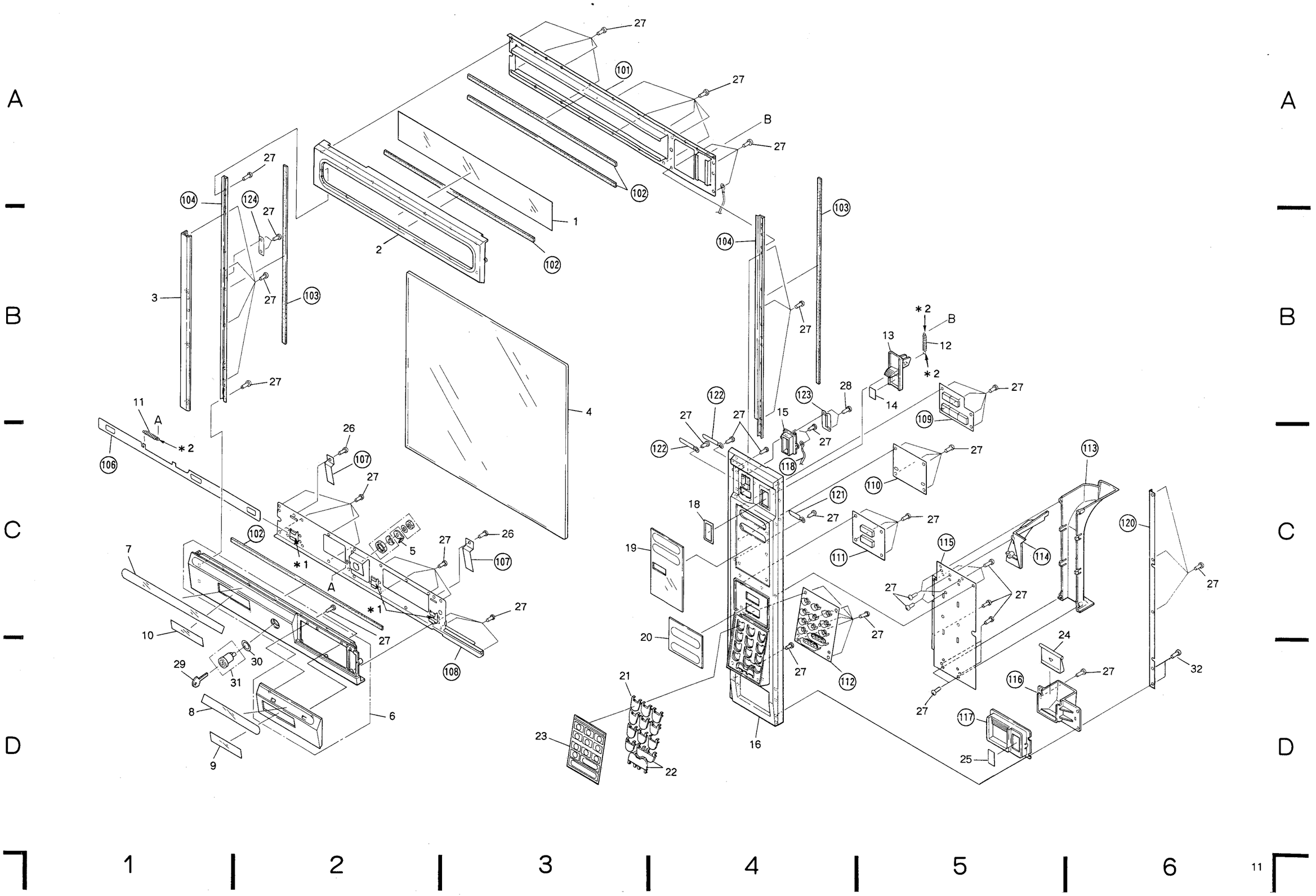

2.3 SCHEMATIC DIAGRAMS

1. RESISTORS :
Indicated in Ω, 1/4W, 1/6W and 1/8W, ±5% tolerance unless otherwise noted k ; kΩ, M ; MΩ, (F) ; ±1%, (G) ; ±2%, (K) ; ±10%, (M) ; ±20% tolerance.

2. CAPACITORS :
Indicated in capacity (μF) / voltage (V) unless otherwise noted p ; pF. Indication without voltage is 50V except electrolytic capacitor.

3. VOLTAGE, CURRENT :
V ; Signal voltage at W+ W,8Ω output (1kHz).
; DC voltage (V) at no input signal.
Value in ( ) is DC voltage at rated power.
⇦mA ; DC current at no input signal.
mV ; Signal voltage at FM 1kHz ± 75Hz DEV.

4. OTHERS :
➡ ; Signal route.
⊘ ; Adjusting point.
The ⚠ mark found on some component parts indicates the importance of the safety factor of the part. Therefore, when replacing, be sure to use parts of identical designation.
※ marked capacitors and resistors have parts numbers.

This is the basic schematic diagram, but the actual circuit may vary due to improvements in design.

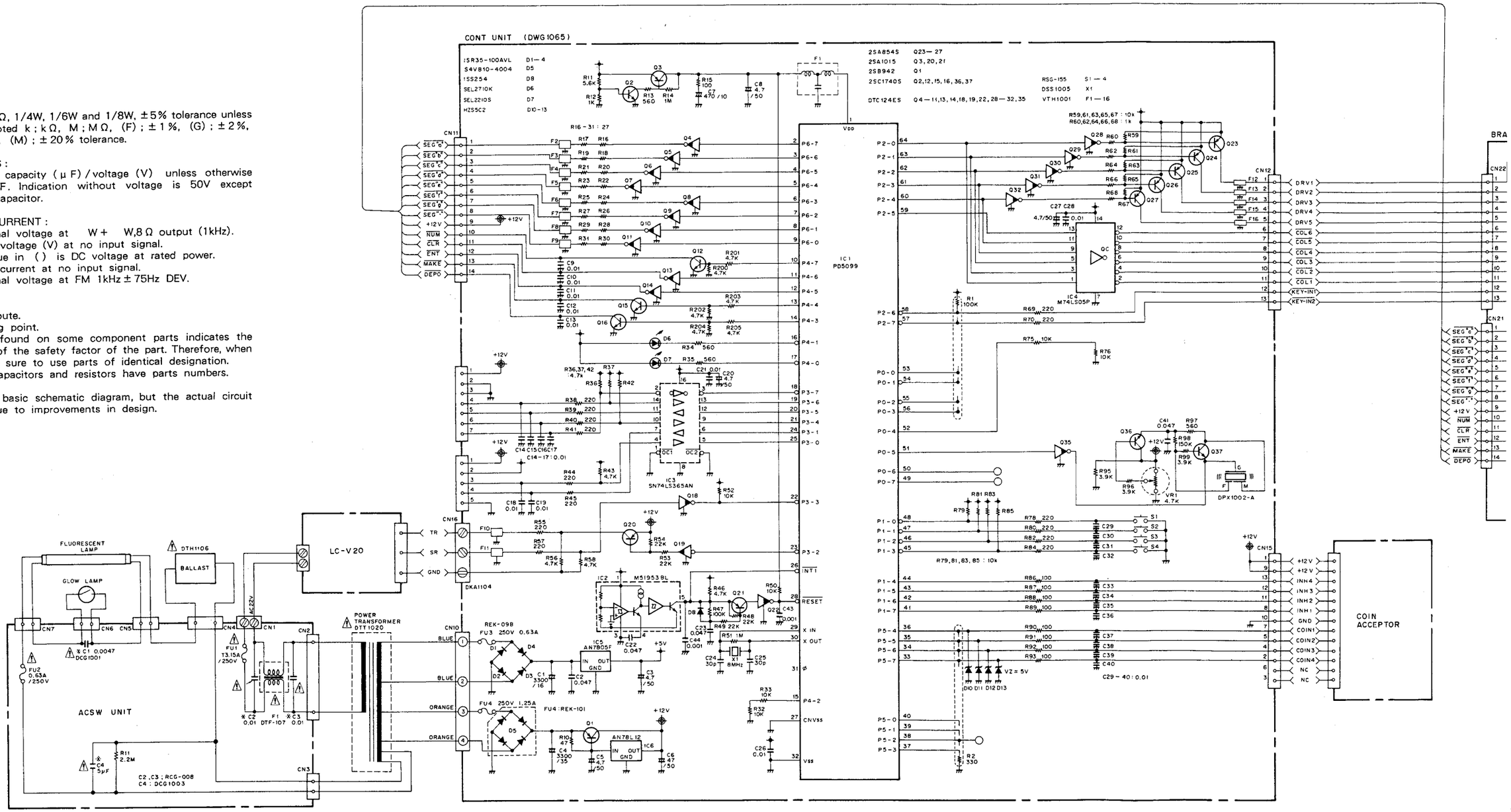

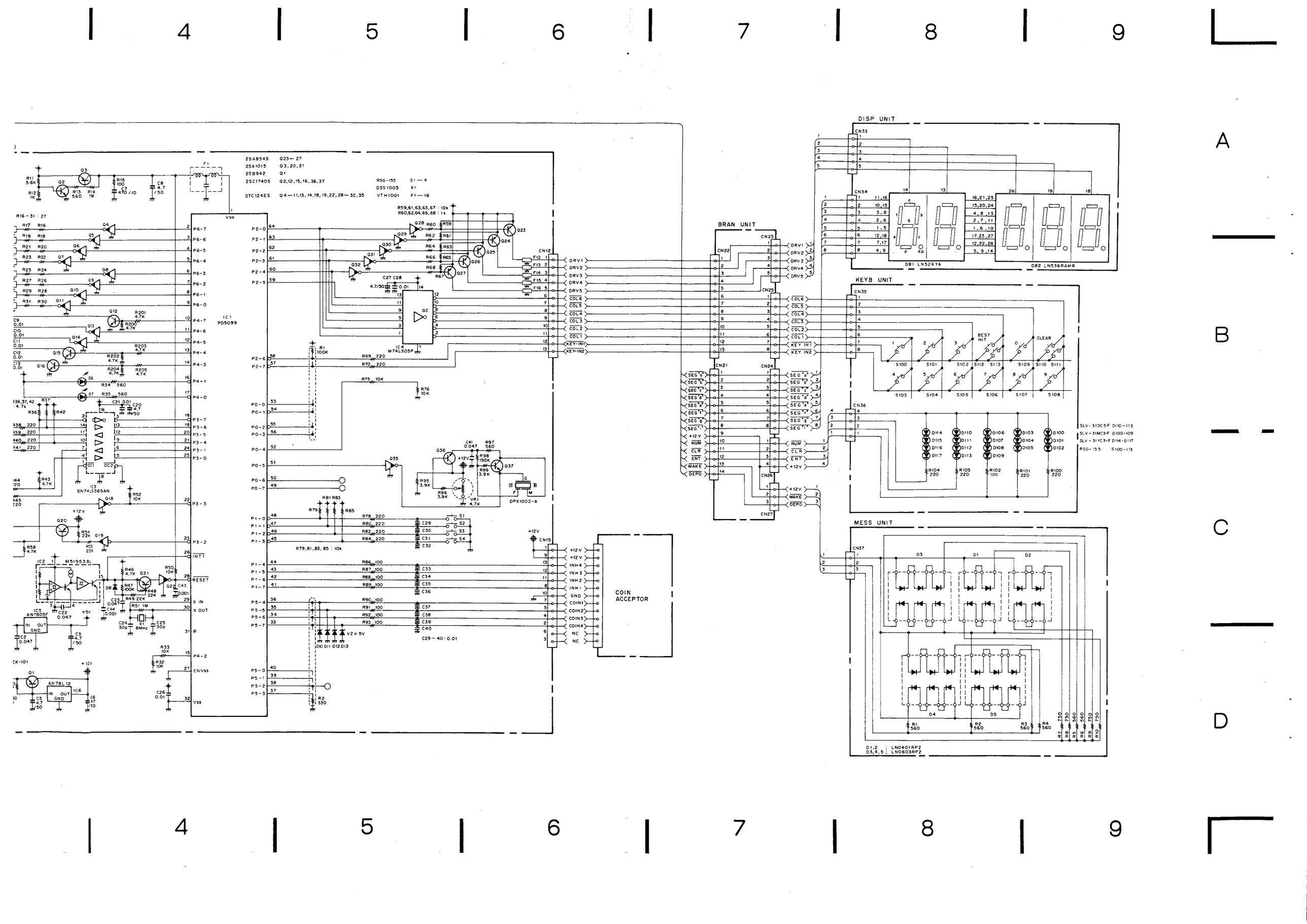

4
5
6
7
8
9
A
B
C
D
DISP UNIT
BRAN UNIT
KEYB UNIT
MESS UNIT
COIN ACCEPTOR
IC1 PD5099
IC4 M74LS05P
IC3 SN74LS365AN
IC2 M51953BL
IC5 AN7805F
IC6 AN78L12
DPX1002-A
D81 LN526YA
D82 LN536RAMR
BEST HIT
CLEAR
D1,2 : LN0401RP2
D3,4,5 : LN0603RP2

2.4 P.C. BOARD PATTERNS

P.C.B. pattern diagram indication	Corresponding part symbol	Part name	P.C.B. pattern diagram indication	Corresponding part symbol	Part name
		Transistor			Ceramic capacitor
		FET			Mylar capacitor
		Diode	SA		Styrol capacitor
			NP		Electrolytic capacitor (Non polarized)
			IN		Electrolytic capacitor (Noiseless)
		Zenner diode			Electrolytic capacitor (Polarized)
					Electrolytic capacitor (Polarized)
		LED			Power capacitor
		Varactor			Semi-fixed resistor
		Tact switch			Resistor array
					Resistor
		Inductor			
		Coil			Resonator
		Transformer			Thermistor
		Filter			

1. This P.C.B. connection diagram is viewed from the parts mounted side.
2. The parts which have been mounted on the board can be replaced with those shown with the corresponding wiring symbols listed in the above Table.
3. The capacitor terminal marked with ▭ shows negative terminal.
4. The diode marked with O shows cathode side.
5. The transistor terminal marked with ▭ shows emitter.

ACSW UNIT

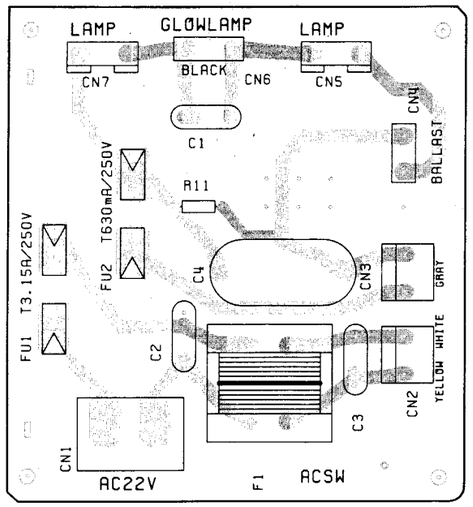

DISP UNIT

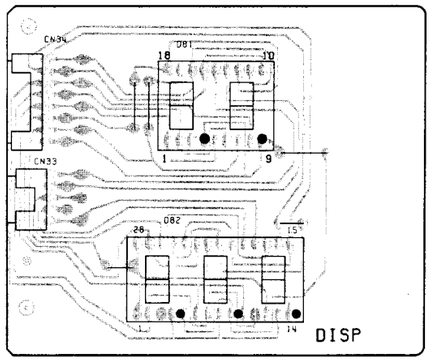

CONT UNIT (DWG1065)

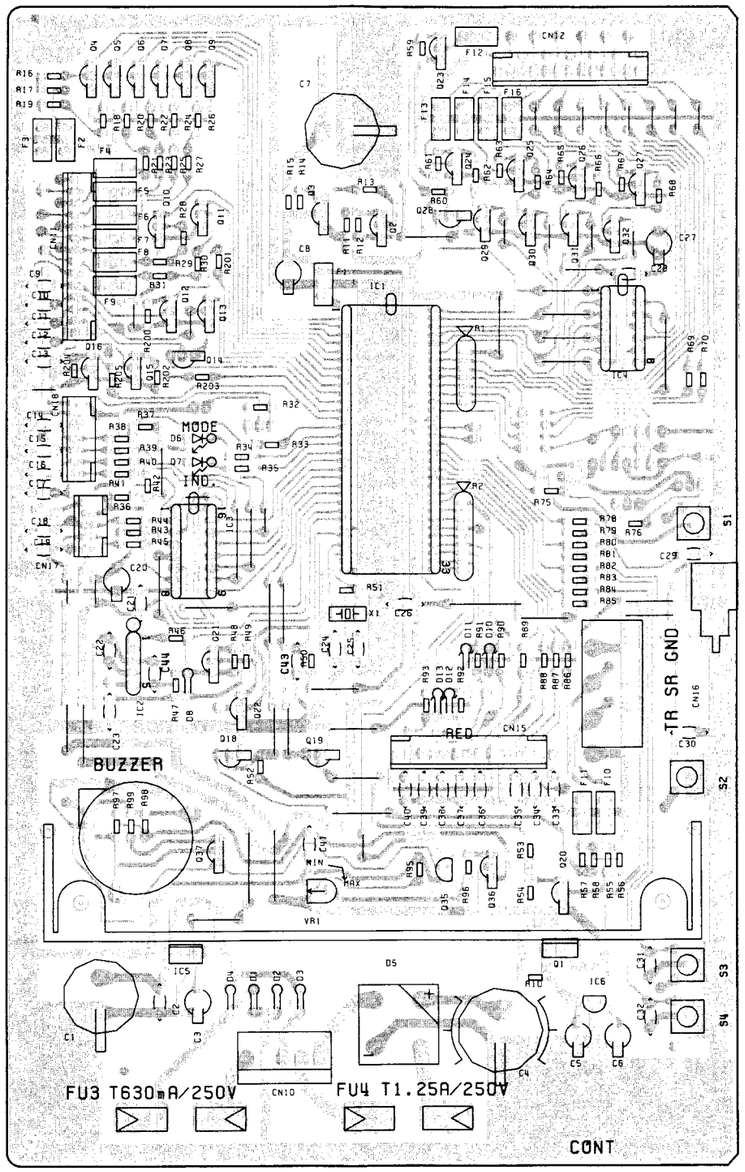

KEYB UNIT

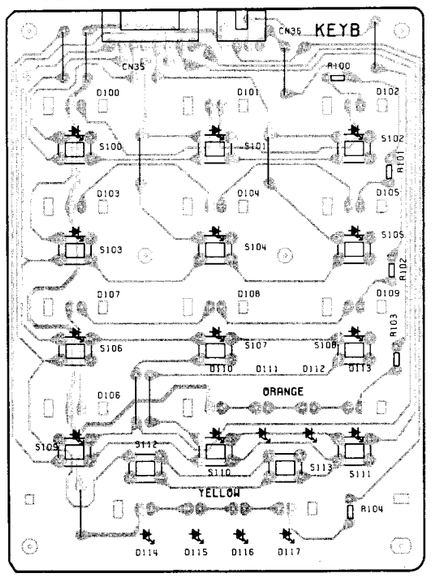

BRAN UNIT

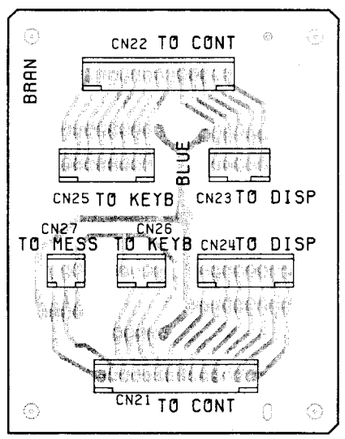

MESS UNIT

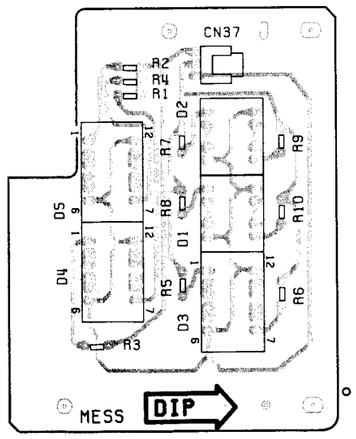

2.5 ELECTRICAL PARTS LIST

NOTES :
- Parts without part number cannot be supplied.
- Parts marked by "◉" are not always kept in stock. Their delivery time may be longer than usual or they may be unavailable.
- The ⚠ mark found on some component parts indicates the importance of the safety factor of the part. Therefore, when replacing, be sure to use parts of identical designation.
- When ordering resistors, first convert resistance values into code form as shown in the following examples.

Ex.1 When there are 2 effective digits (any digit apart from 0), such as 560 ohm and 47k ohm (tolerance is shown by J = 5 %, and K = 10 %).
560 Ω→56 × 10^1 →561 ····· RD1/4PS 5 6 1 J
47k Ω→47 × 10^3 →473 ····· RD1/4PS 4 7 3 J
0.5 Ω→0R5 ····· RN2H 0 R 5 K
1 Ω→010 ····· RS1P 0 1 0 K

Ex.2 When there are 3 effective digits (such as in high precision metal film resistors).
5.62k Ω→562 × 10^1 →5621 ····· RN1/4SR 5 6 2 1 F

- The part number of the semiconductors and the pioneer exclusive use parts are not mentioned. Their are mentioned in the schematic diagrams.

Main body unit

Mark	Symbol & Description	Part No.
◉	CONT unit DISP unit KEYB unit MESS unit ACSW unit BRAN unit	DWG1065

◉CONT unit (DWG1065)

CAPACITORS

Mark	Symbol & Description	Part No.
	C24,C25	CCCSL300J50
	C1	CEAS332M16
	C4	CEAS332M35
	C3,C5,C6,C8,C20,C27	CEAS4R7M50
	C7	CEAS471M10
	C43,C44	CKCYB102K50
	C2,C22,C23,C41	CGCYX473M25
	C9 – C19,C21,C26,C28 – C40	CKCYF103Z50

RESISTORS

Mark	Symbol & Description	Part No.
	VR1 Semi-fixed (47k Ω)	VRTB6VS472
	R1 Resistor array	DCN1010
	R2 Resistor array	DCN1011
	Other resistors	RD1/6PM□□□J

DISP unit

The part number of the service parts are mentioned to the schematic diagram.

KEYB unit

RESISTORS

Mark	Symbol & Description	Part No.
	All resistors	RD1/6PM□□□J

MESS unit

RESISTORS

Mark	Symbol & Description	Part No.
	All resistors	RD1/6PM□□□J

ACSW unit

CAPACITORS

Mark	Symbol & Description	Part No.
⚠	C1 (0.0047)	DCG1001
⚠	C4 (5 μF)	DCG1003
⚠	C2,C3 (0.01)	RCG-008

RESISTORS

Mark	Symbol & Description	Part No.
	R11	RD1/4PM225J

BRAN unit

Electrical parts are not supplied in this unit.

3. VIDEO DISC AUTOCHANGER/LC – V20

3.1 PARTS LOCATION

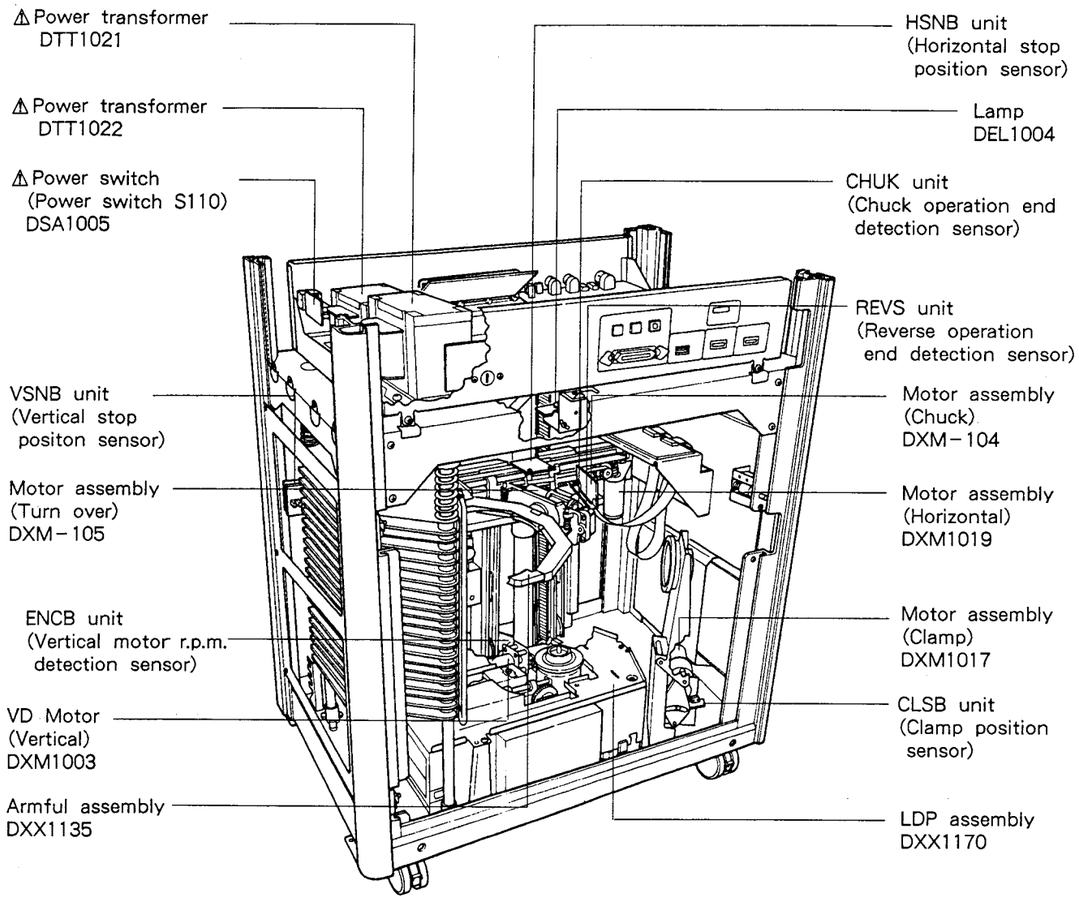

3.2 P.C. BOARDS LOCATION

3.2.1 EXTERIOR

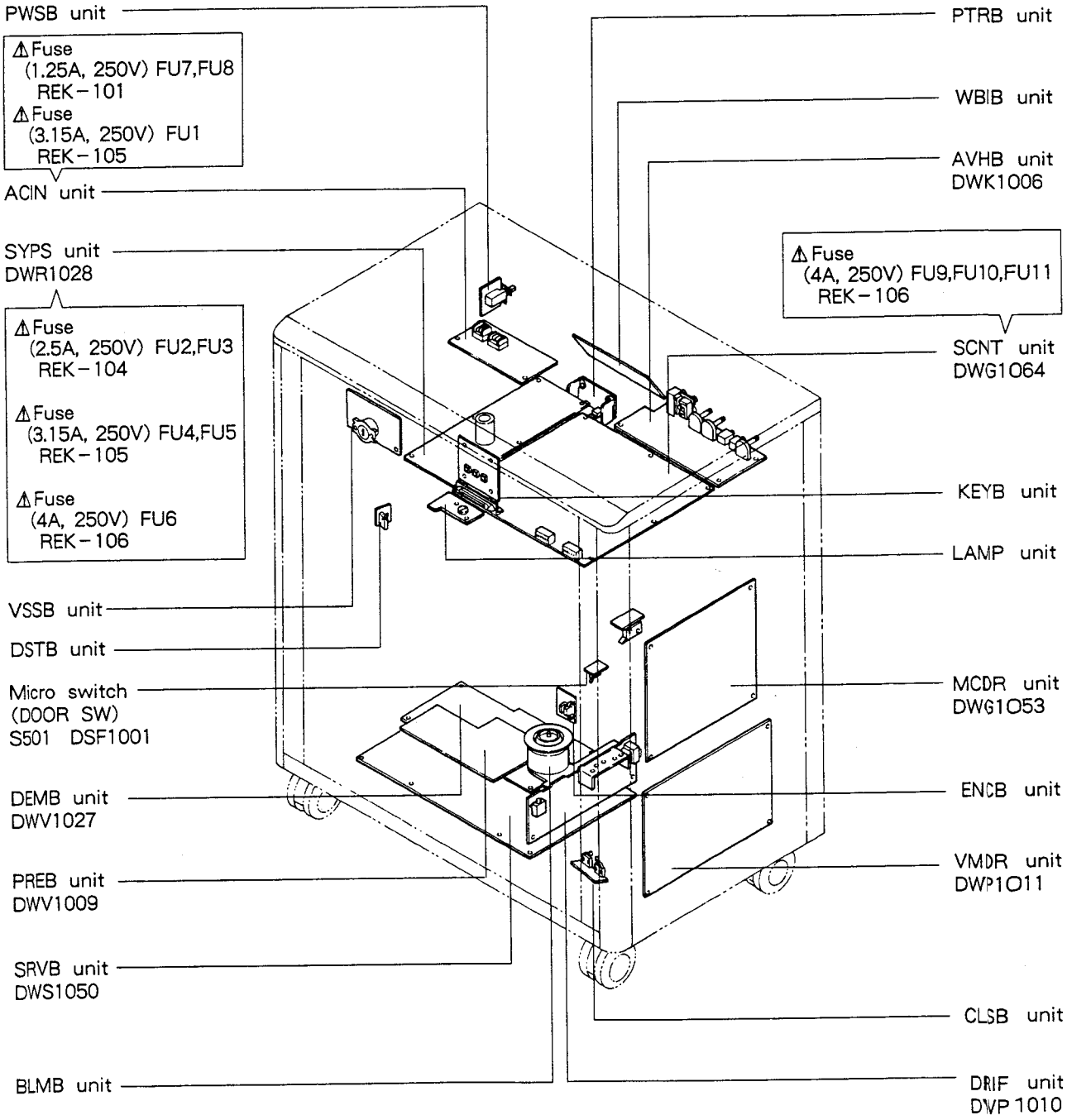

3.2.2 VH base section

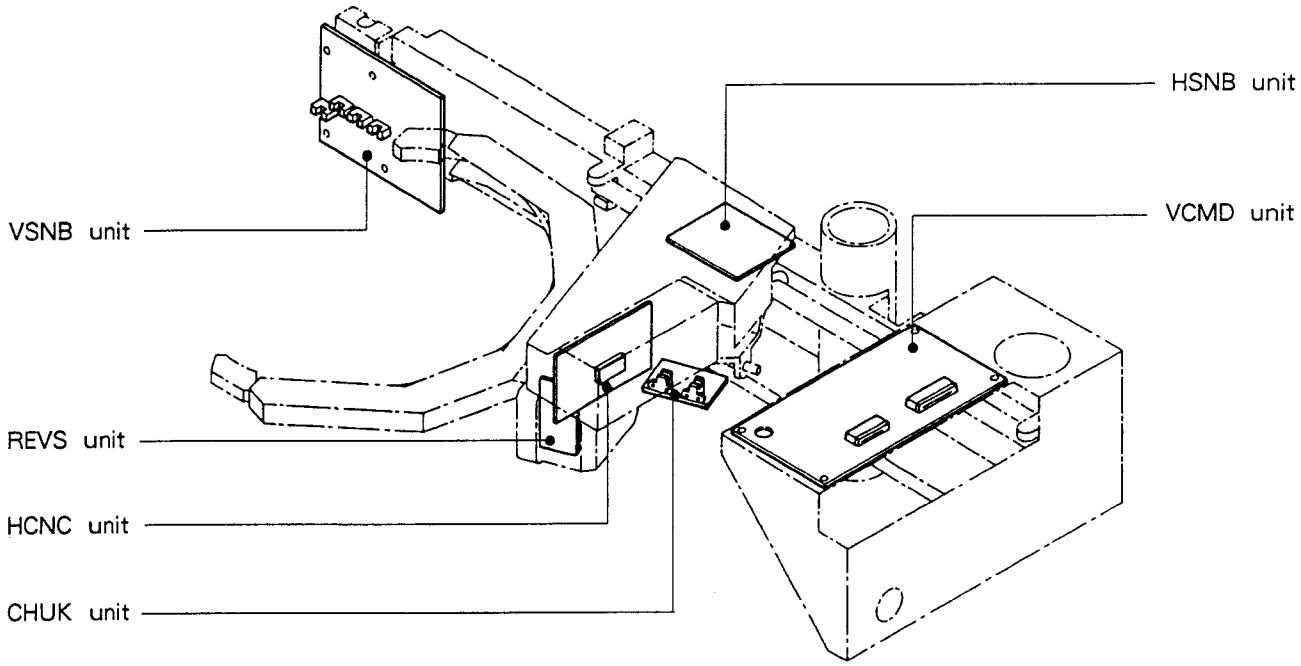

LC - V20 P.C. BOARDS NAME

ACIN : AC Input Board
AVHB : Audio, Video and Headphone Board
CHUK : Chucking Sensor Board
CLSB : Clamp and Switch Board
DEMB : Demodulator Board
DRIF : Driver and Interface Board
DSTB : Disc Stopper Board
ENCB : Encoder Board
HCNC : Horizontal Connecter Board
HEAD : Head Board
HSNB : Horizontal Sensor Board
KEYB : Key Board
LAMP : Lamp Board
VSSB : Voltage Selector Switch Board
BLMB : Brushless Motor Board
MCDR : Micro-Computer and Driver Board
PREB : Pre-Processing Board
PTRB : Power Transistor Board
PWSB : Power Switch Board
REVS : Reverse Sensor Board
SRVB : Servo Board
SYPS : System Power Supply Board
TLMB : Tilt Motor Board
VCMD : Vertical Controller and Motor Driver Board
VMDR : Vertical Motor Driver Board
VSNB : Vertical Sensor Board
WBIB : Wall-Box Interface Board
SCNT : System Controller Board

3.2 EXPLODED VIEWS AND PARTS LIST

3.2.1 EXTERIOR

NOTES :
- Parts without part number cannot be supplied.
- The ⚠ mark found on some component parts indicates the importance of the safety factor of the part. Therefore, when replacing, be sure to use parts of identical designation.
- Parts marked by "◉" are not always kept in stock. Their delivery time may be longer than usual or they may be unavailable.

Parts List

Mark	No.	Part No.	Description
	1	DNK1250	Catch
	2	DNK1252	Decoration panel
	3	DAH1214	Name plate
	4	DMK1029	Top panel
	5	DNH1129	Blind panel A
	6	DNH1130	Blind panel B
	7	DNH1131	Blind panel C
	8	VNL-181	Protector
	9	DMK1028	Rear panel
	10	DMK1027	Side panel R
	11	DMK1026	Side panel L
	12	DXB1063	Slide hinge
	13	DAP1017	Glass sash R
	14	DAP1016	Glass sash L
	15	DAN1007	Front glass
	16	DNK1224	Catch
	17	DXB1065	Key cylinder
	18	CPZ30P120FMC	Screw
	19	WAX9F300M160	Washer
	20	DBA1012	Screw
	21	BBZ40P080FCR	Screw
	22	Z39-009	Screw
	23	DBA1010	Screw
	24	DNH-104	Washer
	25	PBZ60P300FMC	Screw

Mark	No.	Part No.	Description
	101		Screw cover B
	102		Screw cover A
	103		Seal packing E
	104		Seal packing D
	105		Cushion A
	106		Cushion B
	107		Cushion C
	108		Cushion D
	109		Cushion E
	110		Seal packing B
	111		Door settle plate
	112		J settle plate
	113		Stopper
	114		Safety sheet

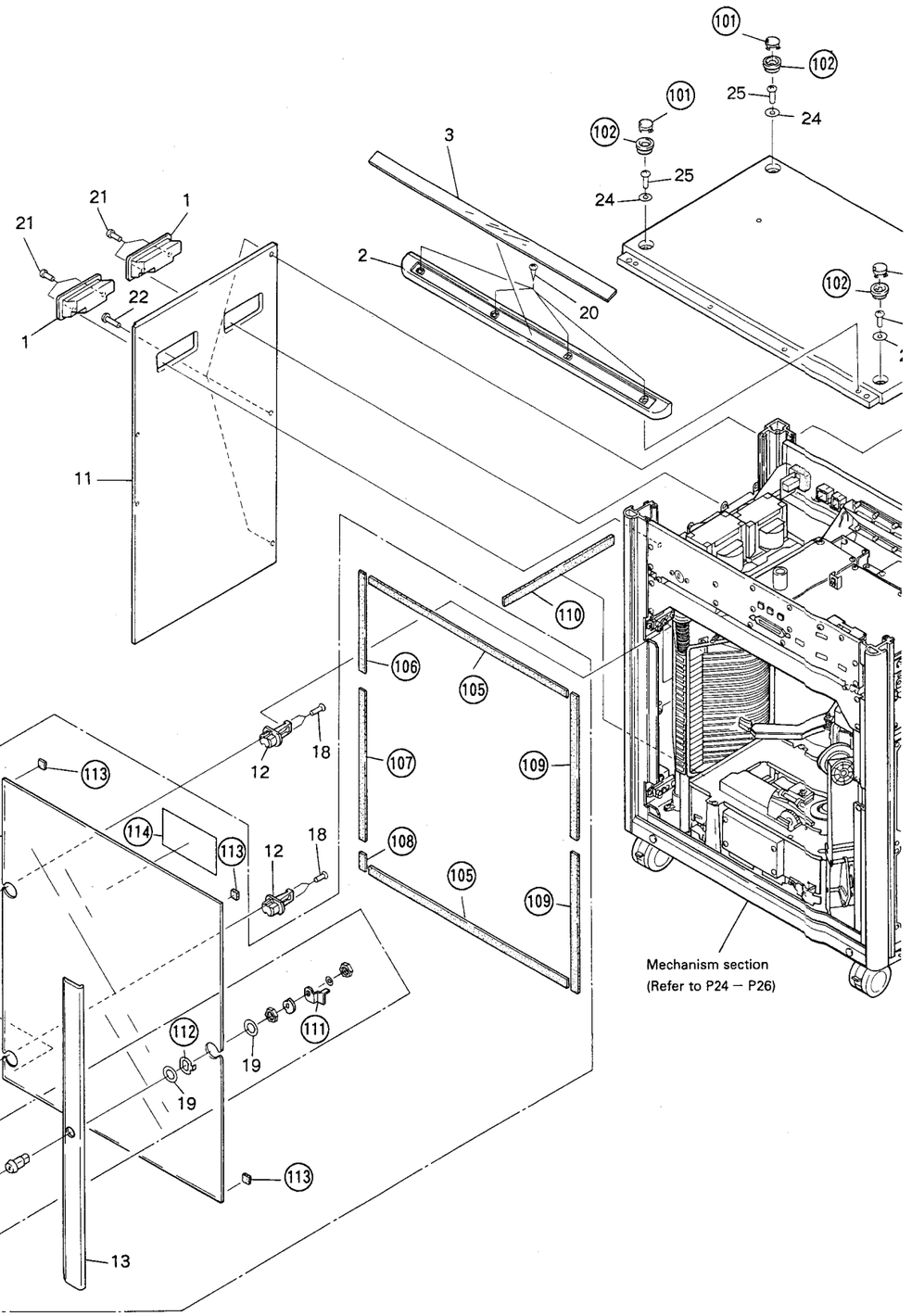

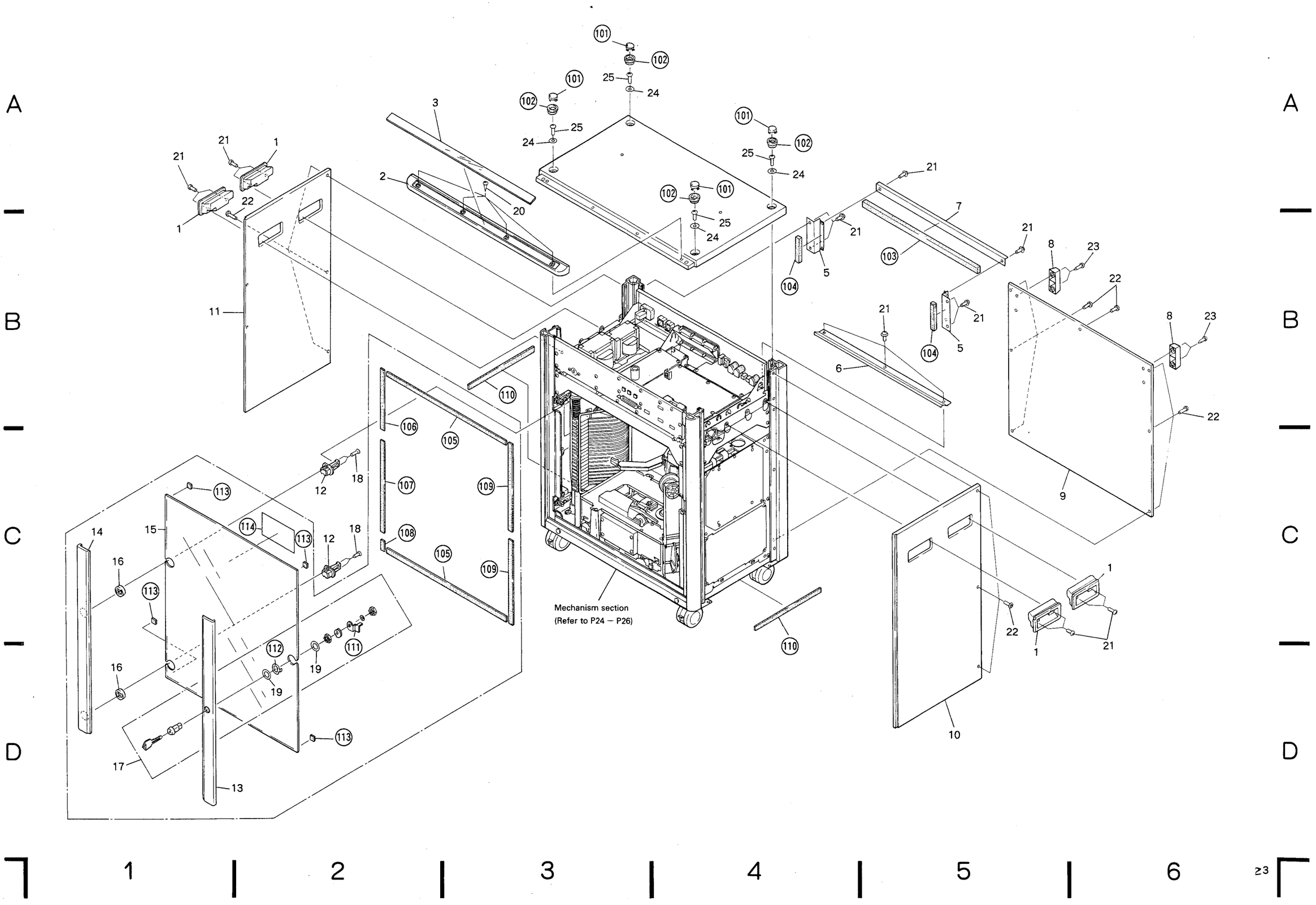
Mechanism section
(Refer to P24 — P26)

3.2.2 MECHANISM SECTION

Parts List

Mark	No.	Part No.	Description	Mark	No.	Part No.	Description
	1	DNH1140	Frame FL		101		Back plate B
	2	DNH1141	Frame R		102		Hinge plate
	3	DNH1139	Frame FR		103		Mount plate
◉	4	DWG1053	MCDR unit		104		LAMP unit
◉	5	DWP1011	VMDR unit		105		Spacer
	6	DBH1036	Door lock spring		106		Lens
	7	DSF1001	Micro switch (DOOR SWITCH)		107		Lamp base
					108		Lamp holder plate
	8	CKDYF473Z50	Ceramic capacitor (C1)		109		Cord holder
	9	DXM1017	Motor assembly (CLAMP)		110		Upper frame
	10	DLA1135	Roller		111		Cord holder
	11	VNL1001	Clamper head		112		Back plate C
	12	VLL1002	Yoke		113		Door lock shaft
	13	DNK1251	Hole cap		114		DRS guide
	14	DDD1008	Flexible cord		115		Door lock plate
	15	DEL1004	Lamp		116		SYPS stay
	16	AMZ40P100FMC	Screw		117		Back plate A
	17	AMZ30P060FZK	Screw		118		Shield plate
	18	AMZ40P080FMC	Screw		119		Clamper magnet
	19	AMZ50P100FMC	Screw		120		Disc clamper
	20	BBZ30P080FZK	Screw		121		Buffer sheet
	21	BBZ40P080FMC	Screw		122		Clamp arm
	22	AMZ40P060FZK	Screw		123		Shaft A
	23	YE20FUC	E ring 2		124		Shaft C
	24	PMH20P100FMC	Screw		125		Plate
	25	YDX5S	C ring 15		126		Joint arm
	26	AMZ30P060FMC	Screw		127		CLamp base
	27	BBZ30P080FMC	Screw		128		SW cam
	28	PMA40P100FMC	Screw		129		CLSB unit
	29	PMB30P060FMC	Screw		130		Shaft B
	30	YE30FUC	Washer		131		LDP plate assembly
	31	YE40FUC	Washer		132		Shield sheet
	32	ZMD26H050FBT	Screw				
	33	CMZ26P050BNT	Screw				
	34	VEB1009	Rubber foot (A)				
◉	35	DXX1170	LDP assembly				

＊1 : Apply the froil GB-TS-1 (Z51-016)
＊2 : The portion of indicate "＊2" are put by the screw tight # 300VB (ASCE-0300)
＊3 : The portion of indicate "＊3" are put by the dia-bond # 1663 (ASCR-2663)

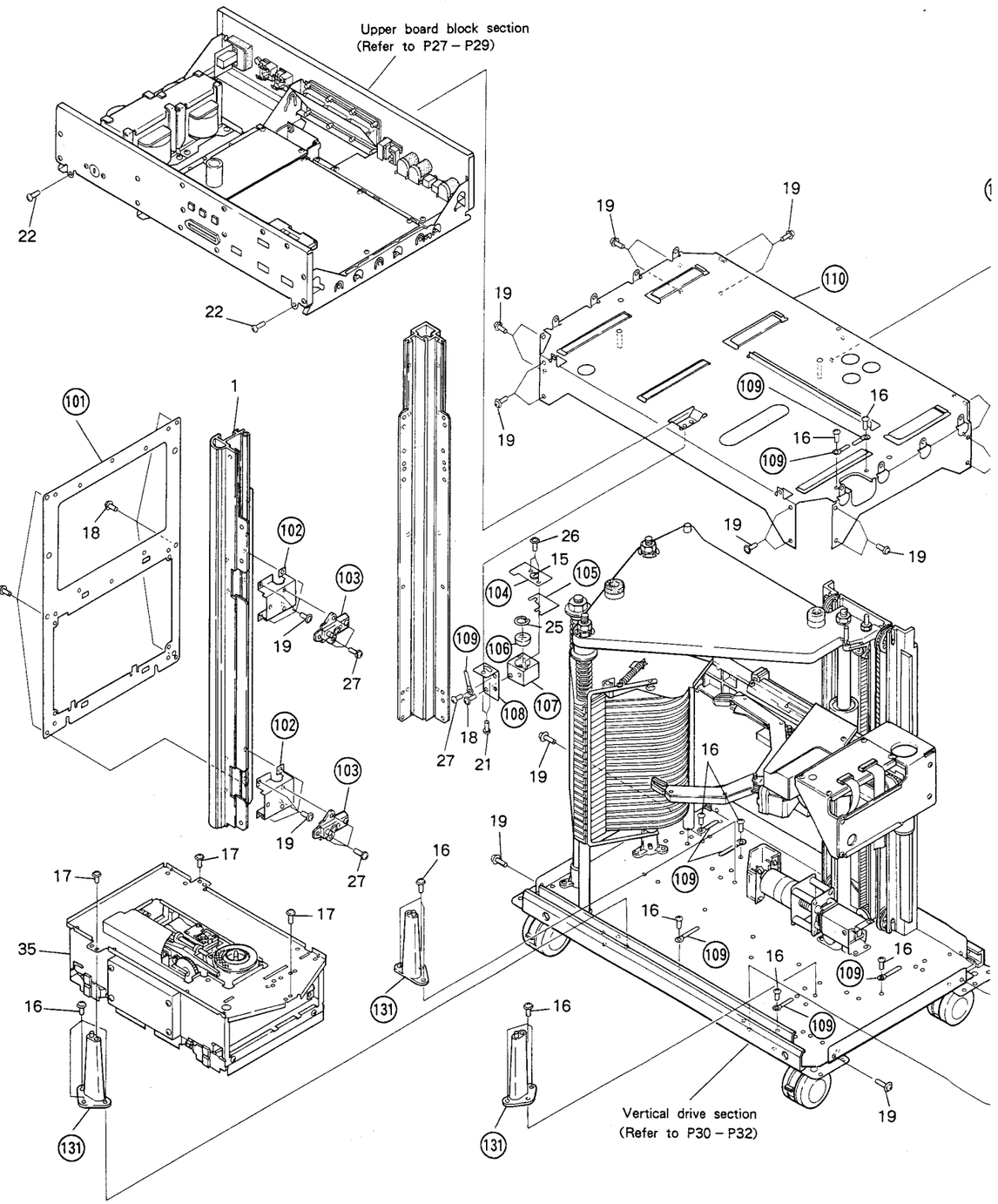

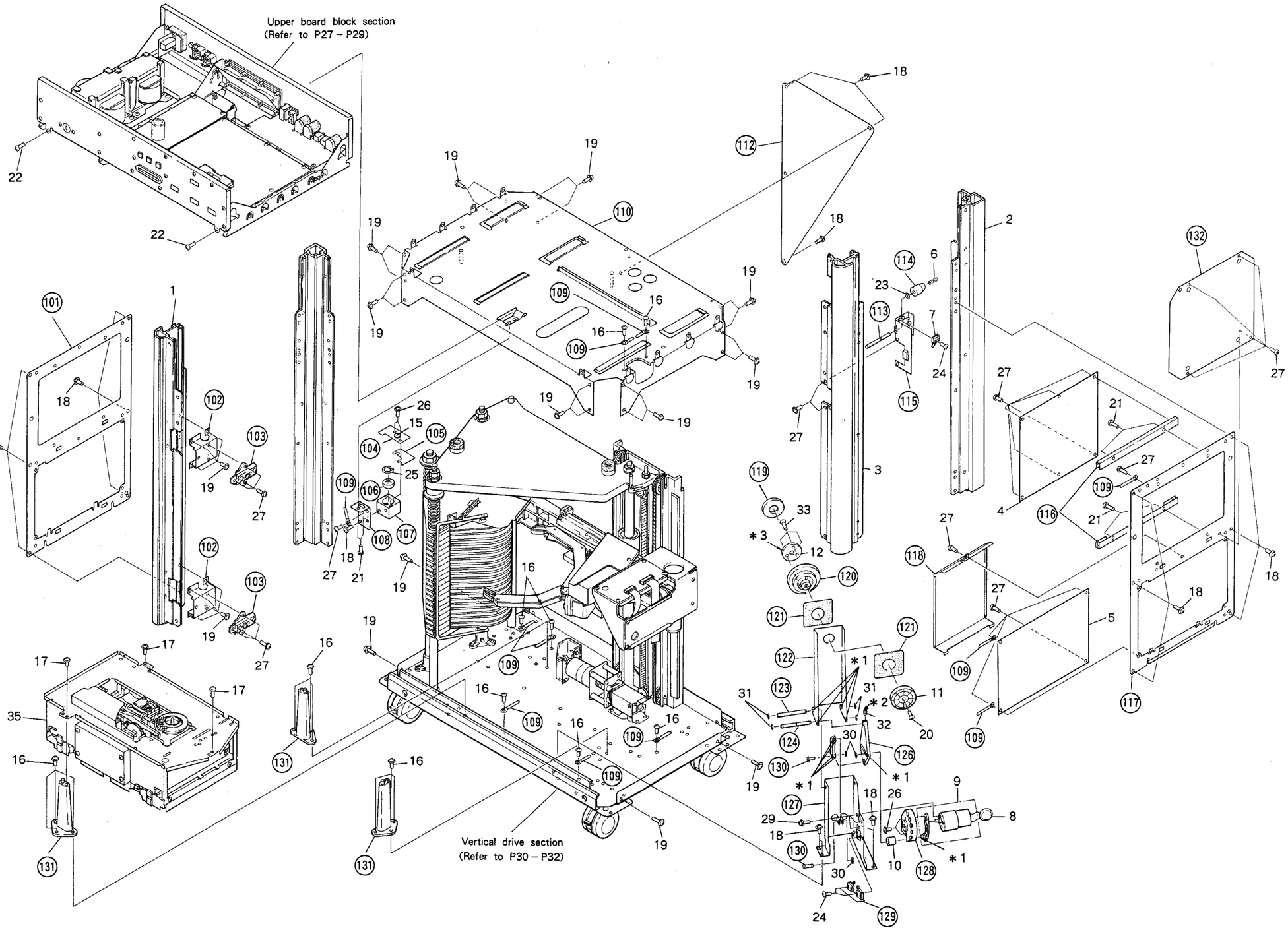
Upper board block section
(Refer to P27 – P29)
Vertical drive section
(Refer to P30 – P32)

3.2.3 UPPER BOARD BLOCK SECTION

Parts List

Mark	No.	Part No.	Description
⚠	1	DTT1021	Power transformer
⚠	2	DTT1022	Power transformer
⚠	3	REK-101	Fuse (1.25A/250V, FU7,FU8)
⚠	4	REK-104	Fuse (2.5A/250V, FU2,FU3)
⚠	5	REK-105	Fuse (3.15A/250V, FU1,FU4,FU5)
	6	DLA-177	Stud
	7	DAC1107	Push knob
⚠	8	DDG1011	AC power cord
⚠	9	AKP-508	AC outlet (1P)
	10	DNH1132	Terminal cover
⚠	11	REK-106	Fuse (4A/250V, FU6, FU9 – FU11)
◉	12	DWK1006	AVHB unit
	13	DYW1029	IC1
	14	DEM1001	Battery
◉	15	DWG1064	SCNT unit
	16	VCX-006	Hour meter
◉	17	DWR1028	SYPS unit
	18	DAW1006	Electromgnetic counter
	19	DNB1007	Front panel
	20	DAC-116	Push button
	21	BBZ30P080FMC	Screw
	22	PMZ30P030FMC	Screw
	23	BBZ30P060FMC	Screw
	24	AMZ30P060FZK	Screw
	25	BBZ30P080FZK	Screw
	26	BBZ40P080FMC	Screw
⚠	27	CM-22B	Strain relief
	28	BBZ30P100FMC	Screw

Mark	No.	Part No.	Description
	101		ACIN unit
	102		PWSB unit
	103		C stopper A
	104		• • • • •
	105		Terminal frame
	106		WBIB unit
	107		C stopper B
	108		PTRB unit
	109		Connect unit
	110		Cord holder
	111		Side frame
	112		Terminal holder
	113		Center frame
	114		Transformer plate
	115		Seal packing F
	116		P.C.B holder
	117		KEYB unit
	118		Counter holder
	119		Rear panel
	120		VSSB unit

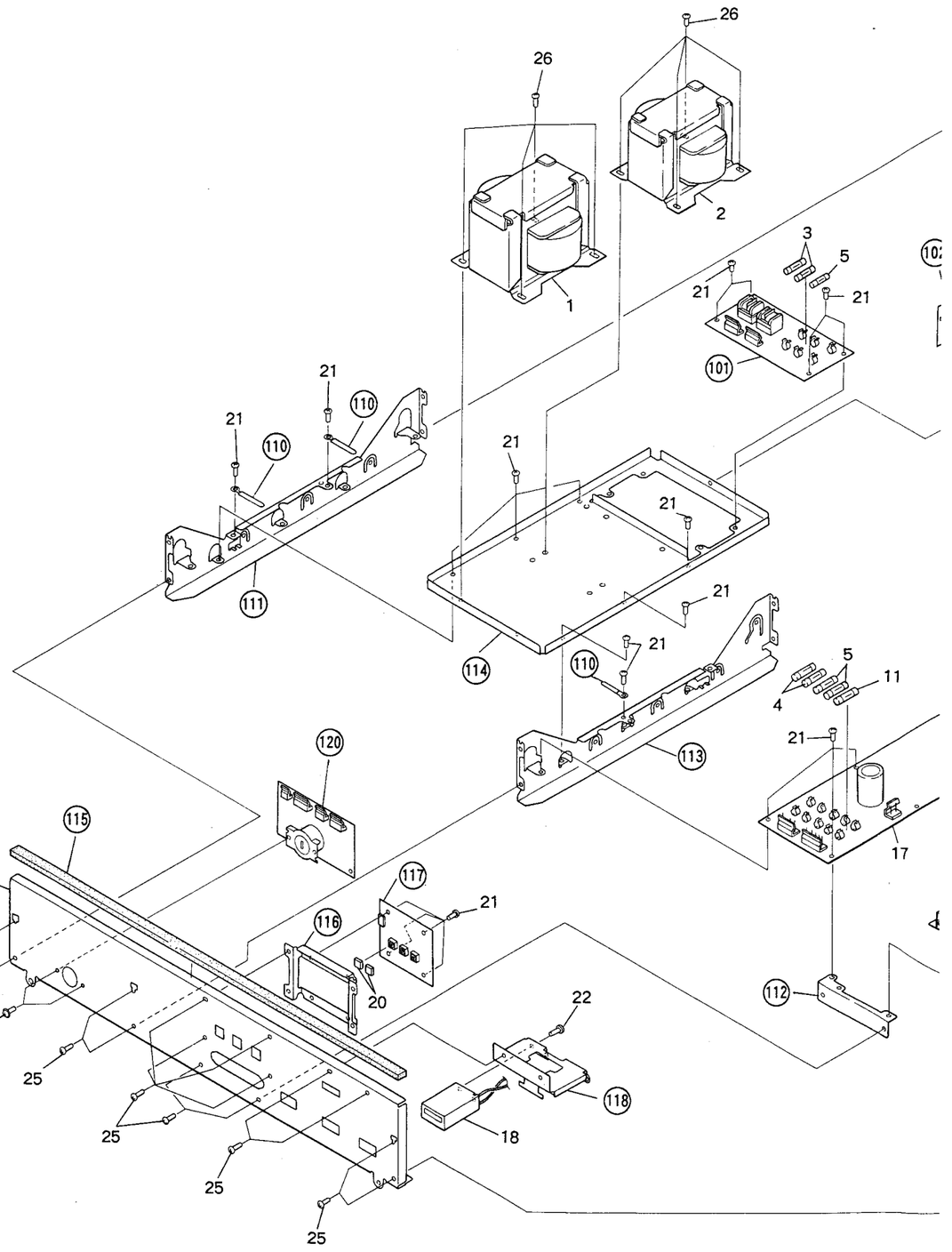

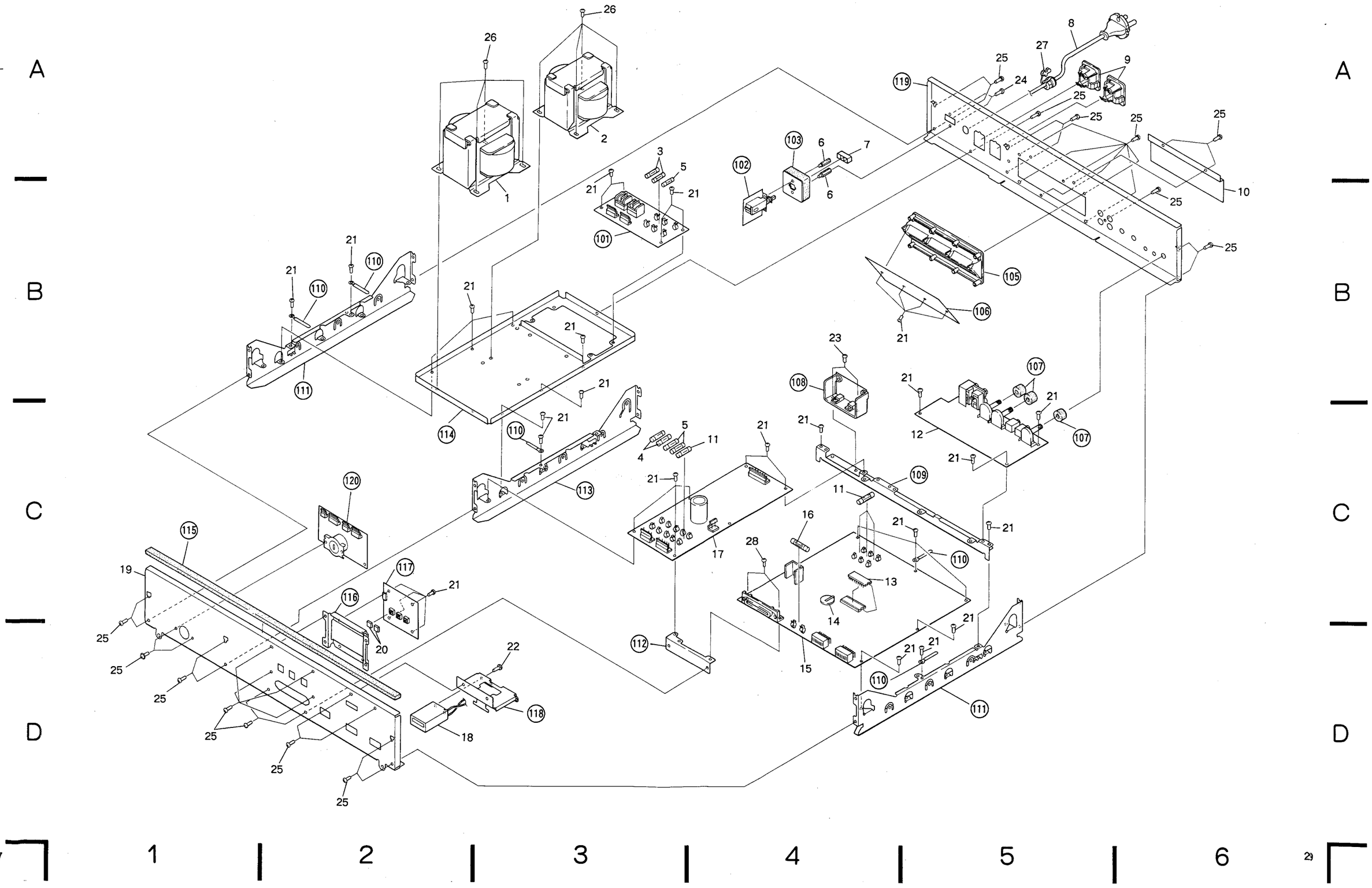
1
2
3
4
5
6
A
B
C
D
26
1
2
3
5
21
101
102
103
6
7
8
9
27
24
25
119
10
105
106
107
108
109
110
111
112
113
114
115
116
117
118
120
11
12
13
14
15
16
17
18
19
20
22
23
28

3.2.4 VERTICAL DRIVE SECTION

Parts List

Mark	No.	Part No.	Description
	1	DEC-137	Dummy disc
	2	DNH-125	Washer assemlby
	3	DXB-109	Bearing
	4	DMA-112	Pulley D
	5	DMS1004	Timing belt
	6	DMA-115	Belt presser
	7	DNH1133	Nut
	8	DMA-120	Weight roller
	9	DLA-134	Weight pulley shaft
	10	DMA-121	Weight pulley
	11	DXB1061	Wire assembly
	12	DBH-120	Weight spring
	13	DLA1064	Worm gear assembly
	14	DLA1145	Worm foil assembly
	15	DEB1003	PL ring
	16	DXX1134	Gear box assembly
	17	DNK1043	Coupling
	18		• • • • •
	19	DXM1003	VD motor (VERTICAL)
	20	DXB1021	Disc slit
	21	DXB1053	Caster
	22	DXB1052	Caster S
	23	DNH1137	Under frame F
	24	DNH1138	Under frame R
	25	AMZ40P100FMC	Screw
	26	ZMD50H080FBT	Screw
	27	WDXOFMC	Washer
	28	WSXOFMC	Spring washer
	29	NBXOFMC	Nut
	30	WB60FMC	Washer
	31	NB60FMC	Nut
	32	AMZ40P080FMC	Screw
	33	NN30FUC	Nylon nut
	34	PMA50P100FMC	Screw
	35	YE40FUC	E ring 4
	36	PMH30P140FMC	Screw
	37	VEB1009	Rubber foot (A)
	38	DNK1258	VD pulley
	39	AMZ30P060FMC	Screw
	40	PMZ26P080FMC	Screw
	41	NB26FMC	Nut 2.6
	42	AMZ30P160FMC	Screw
	43	ZMD26H030FBT	Screw
	44	AMZ20P060FMC	Screw
	45	ZMD40H080FBT	Screw
	46	WA52D080D025	Polyslider
	47	WA52D120D025	Polyslider W
	48		• • • • •
	49	DAH1177	Address label

Mark	No.	Part No.	Description
	101		Upper base
	102		• • • • •
	103		Guide shaft
	104		Linear shaft
	105		Pulley shaft B
	106		Pulley holder assembly
	107		Collar
	108		Rock plate H
	109		• • • • •
	110		• • • • •
	111		• • • • •
	112		• • • • •
	113		Caution label
	114		Rail
	115		Weight assembly
	116		Flange
	117		Oil seal
	118		O ring
	119		Bearing
	120		Bearing
	121		Gear box
	122		Flange
	123		GB holder
	124		GB plate
	125		VM boss
	126		VM plate
	127		Cord holder
	128		VME plate
	129		ENCB unit
	130		Motor cover
	131		Shaft plate
	132		LDP slit
	133		Under base
	134		Reinforced angle B
	135		Reinforced angle A
	136		Seal
	137		Caster hold plate B
	138		Caster hold plate A

* 1 : Apply the froil GB-TS-1 (Z51-016)
* 2 : Apply the super highland oil (Z51-045)
* 3 : The portion of indicate "* 3" are put by the screw tight # 300VB (ASCE-0300)
* 4 : The portion of indicate "* 4" are put by the dia-bond # 1663 (ASCR-2663)

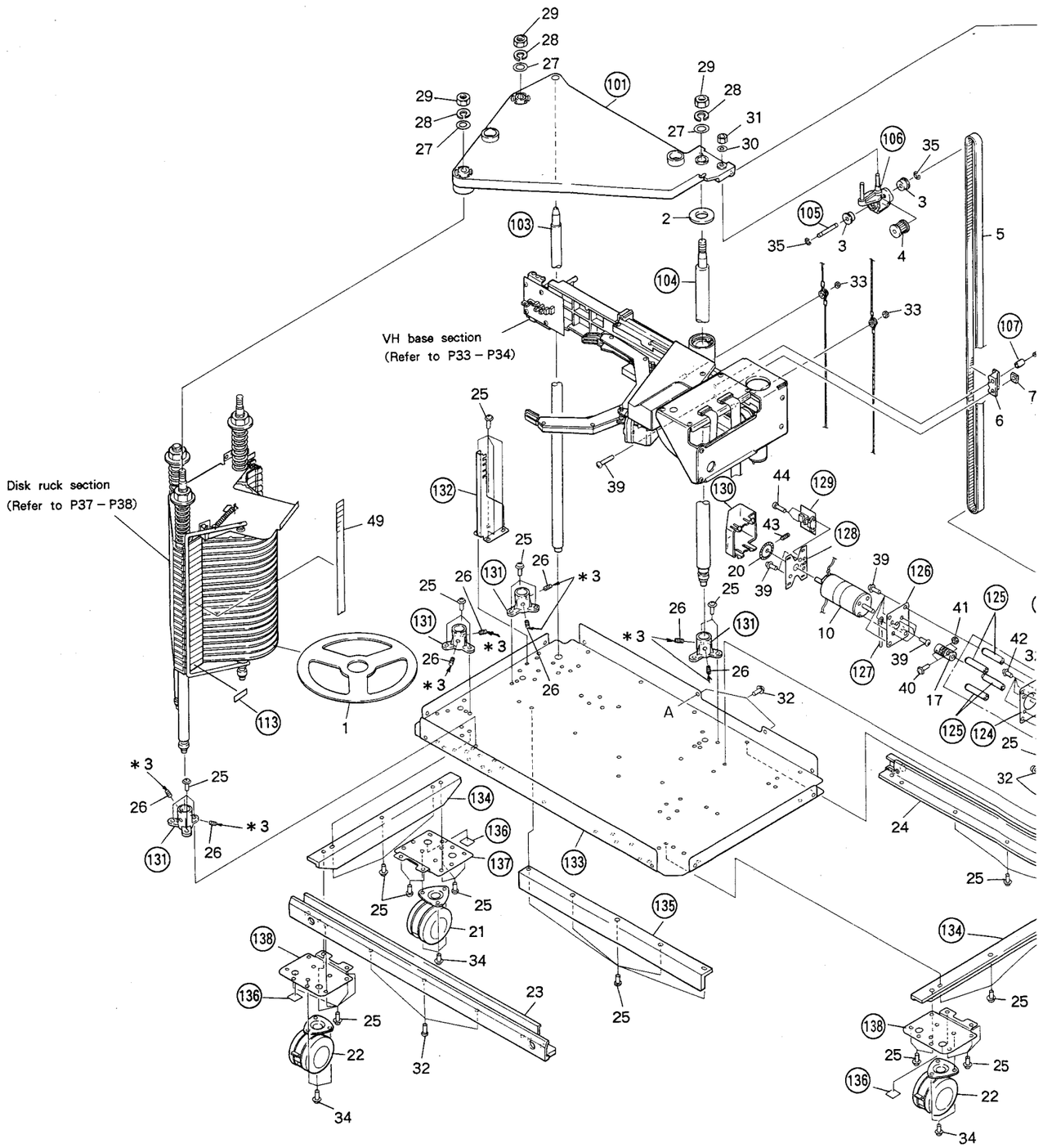

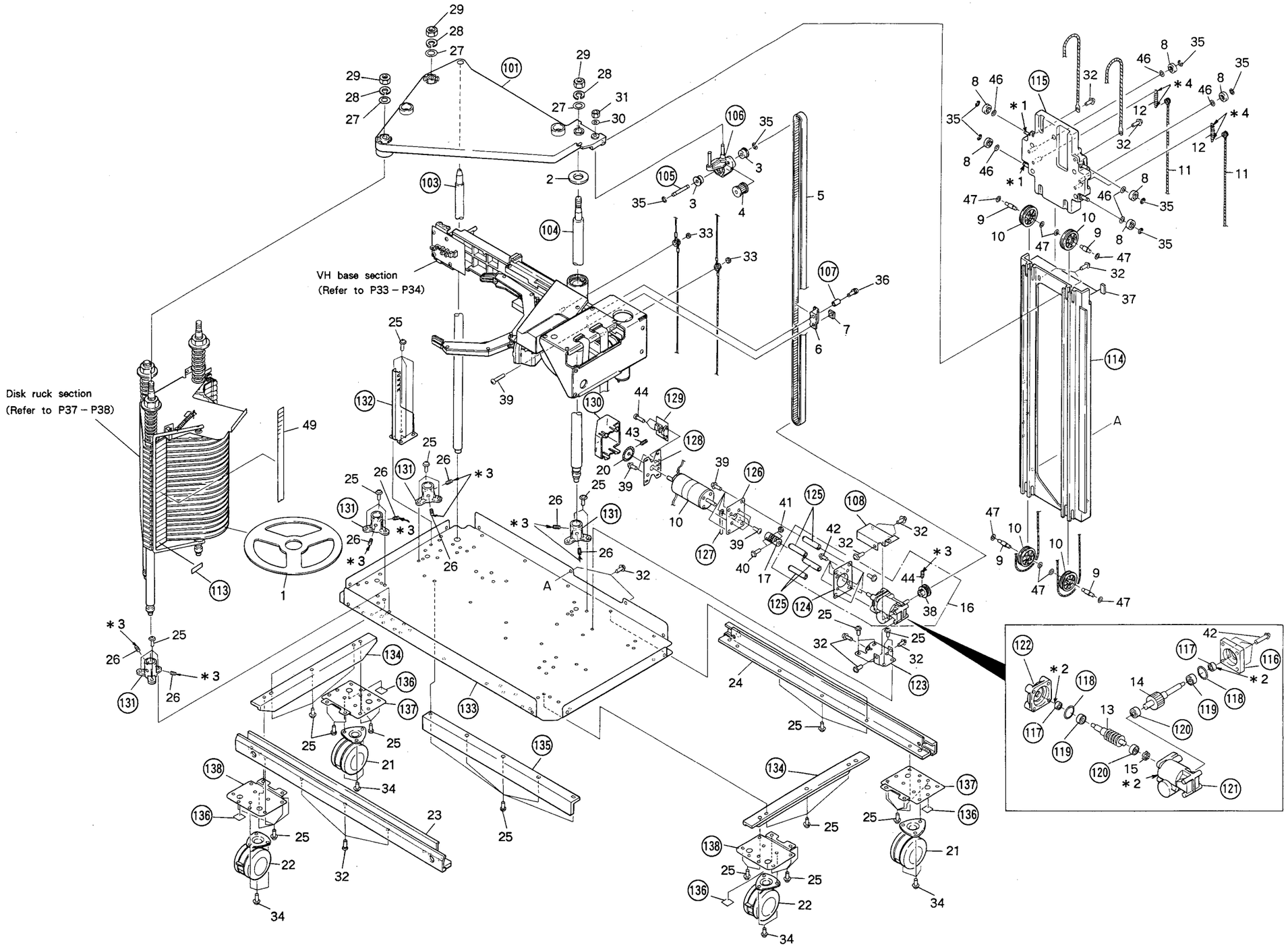
Disk ruck section
(Refer to P37 – P38)
VH base section
(Refer to P33 – P34)
A
A

3.2.5 VH BASE SECTION

Parts List

Mark	No.	Part No.	Description
	1	DXB1088	Bearing
	2	DMA-122	Tension roller
	3	DMA-114	Pulley F
	4	DMS-103	Timing belt
	5	DMA-113	Pully E
	6	DBH-119	Spring
	7	DBH-112	Torsion spring
	8	DDD1007	Flexible cord (VCMD unit – CN426 ⇔ HCNC unit – CN501)
	9	DDD1008	Flexible cord (VCMD unit – CN421 ⇔ MCDR unit – CN501)
	10	DXM1019	Motor assembly (HORIZONTAL)
	11	CKDYF473Z50	Ceramic capacitor (C2)
	12	DXB-124	SB sleeve
	13	DEB-105	Rubber washer
	14	BBZ30P060FMC	Screw
	15	AMZ30P060FMC	Screw
	16	BBZ30P080FZK	Screw
	17	AMZ30P100FMC	Screw
	18	WA71D110D025	Polyslider washer
	19	YE30FUC	E ring 3
	20	RTW-32	C ring
	21	ZMD40H060FBT	Screw
	22	AMZ40P080FMC	Screw
	23	YE50FUC	E ring 5
	24	YE40FUC	E ring 4
	25		• • • • •
	26	PMA30P080FMC	Screw
	27		• • • • •
	28		• • • • •
	29	ZMD40H180FBT	Screw
	101		VSNB unit
	102		V sensor plate
	103		VS plate C
	104		VS plate B assembly
	105		VS plate A
	106		Tension roller plate
	107		Tension roller shaft
	108		Cord holder
	109		VD belt plate
	110		Slit plate H
	111		Roller bar assembly
	112		Hook pin
	113		VH base assemlby
	114		Arm set plate
	115		VCMD unit
	116		PC holder
	117		Motor holder plate
	118		Sensor cover
	119		Guide bar

*1 : The portion of indicate "*1" are put by the screw tight # 300VB (ASCE-0300)

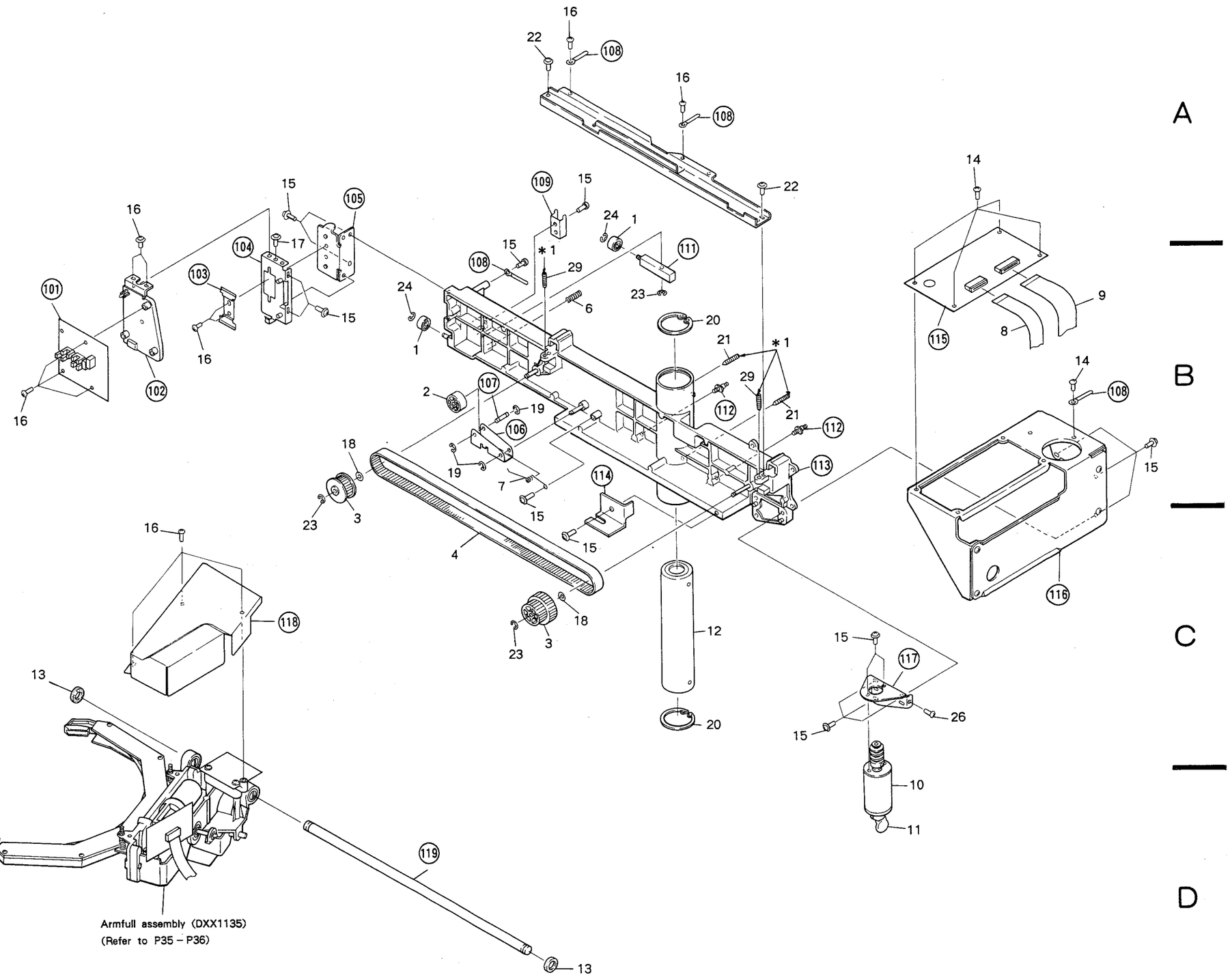

3.2.6 ARMFUL ASSEMBLY (DXX1135)

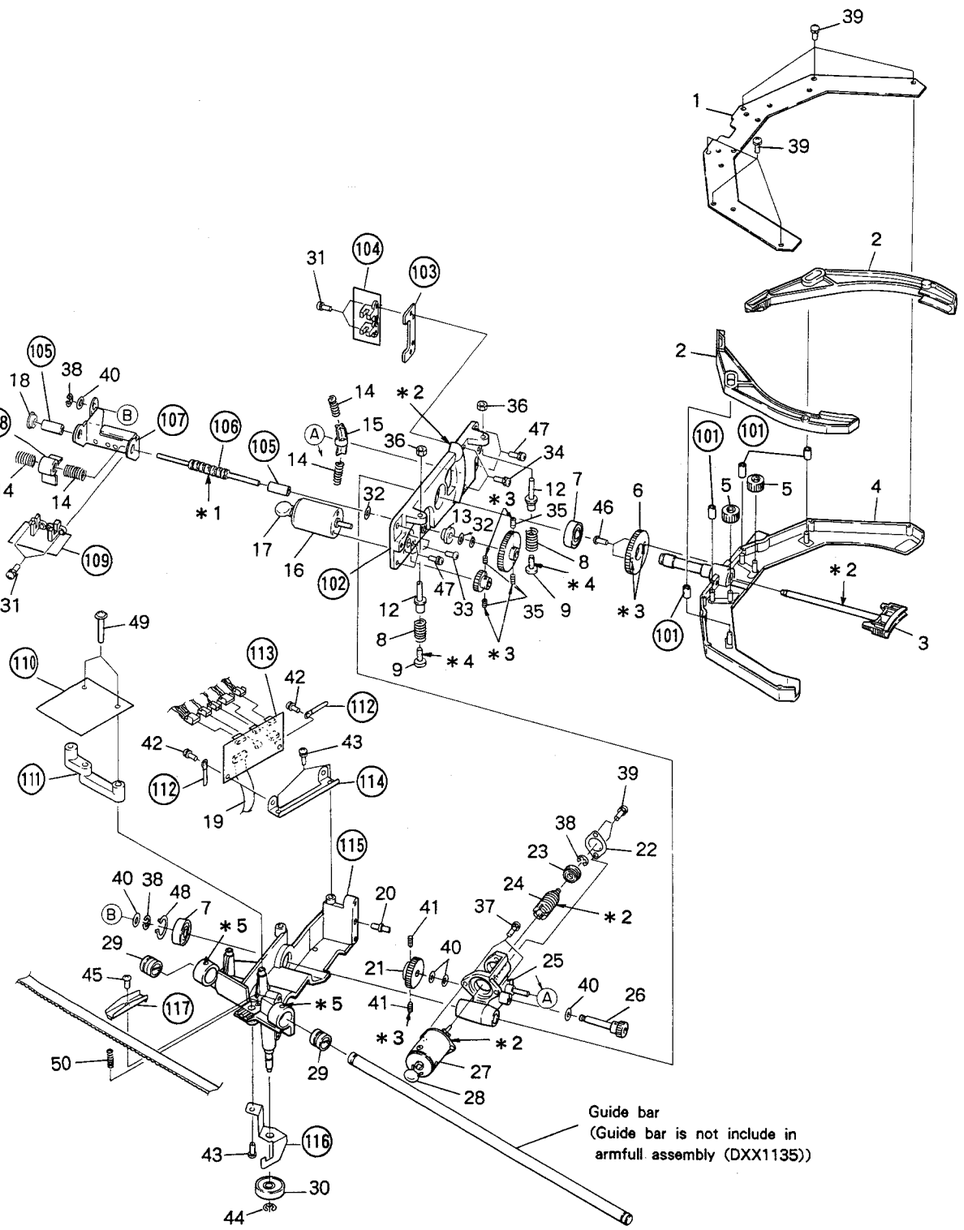

Parts List

Mark	No.	Part No.	Description
	1	DNH-120	Arm cover
	2	DMA-137	Arm
	3	DMA-138	Chuck
	4	DXB-106	Arm cover assembly
	5	DMA-139	Idle gear
	6	DMA-132	Reverse gear B
	7	DXB-116	Bearing
	8	DBH1001	Damper spring
	9	DEB-124	Damper rubber
	10	DMA-177	Chuck gear B
	11	DMA-129	Chuck gear A
	12	DLA1003	Ajustmet screw
	13	DXB1084	Bearing
	14	DBH-127	Road spring
	15	DMA-135	SP holder
	16	DXM-104	Motor (CHUK)
	17	CKDYF473Z50	Ceramic capacitor (C4)
	18	DXB1083	Bearing
	19	DDD1007	Flexible cord (HCNC unit – CN416 ⇔ VCMD unit – CN426)
	20	DLA-143	Pin
	21	DNK1257	Worm foil
	22	DNF-128	Bearing holder
	23	DXB-115	Bearing
	24	DLA-156	Worm gear
	25	DXB-105	Reverse base assembly
	26	DMA-131	Reverse gear A
	27	DXM-105	Motor assemlby (REVERSE)
	28	CKDYF473Z50	Ceremic capacitor (C3)
	29	DXB-125	Bushing
	30	DXB1088	Bearing
	31	PMH30P060FMC	Screw
	32	WA42D080D025	Polyslider washer
	33	PMA20P040FMC	Screw
	34	PMH30P140FMC	Screw
	35	ZMD30H040FBT	Screw
	36	NB40FMC	Nut 4
	37	PMH30P120FMC	Screw
	38	YE30FUC	E ring 3
	39	PMH26P060FMC	Screw
	40	WA52D080D025	Polyslider washer
	41	ZMD30H060FBT	Screw
	42	BBZ30P060FMC	Screw
	43	AMZ30P060FMC	Screw
	44	YE40FUC	E ring 4
	45	PMH40P080FMC	Screw
	46	BMZ30P060FMC	Screw
	47	AMZ40P120FMC	Screw
	48	YCX0FBT	C ring 10
	49	AMZ30P200FMC	Screw
	50	DBH-117	Clamp spring
	101		Curler
	102		Arm base A
	103		SW holder
	104		REVS unit
	105		Curler
	106		Drive shaft
	107		Drive plate
	108		Drive top
	109		CHUK unit
	110		HSNB unit
	111		H sensor plate
	112		Cord holder
	113		HCNC unit
	114		PC holder B
	115		Arm base B assembly
	116		Plate
	117		Belt presser

＊1 : Apply the froil # 947P (Z51-038)
＊2 : Apply the froil GB-TS-1 (Z51-016)
＊3 : The portion of indicate "＊3" are put by the screw tight # 300VB (ASCE-0300)
＊4 : The portion of indicate "＊4" are put by the dia-bond # 1663 (ASCR-2663)
＊5 : The portion of indicate "＊5" are put by the look tight # 460 (AMAC 0460)

3.2.7 DISC RACK

Parts List

Mark	No.	Part No.	Description
	1	DBH1031	Spring
	2	DBA1001	Screw
	3	DMA-185	Detector lever
	4	DNK1215	Disc rack
	5	DNH1002	Rack washer
	6	YCX6FBT	C ring 16
	7	NBX4FMC	Nut 14
	8	BBZ30P080FMC	Screw
	9	PMH20P100FMC	Screw
	51		Washer
	52		Rack spring
	53		Rack shaft A
	54		Rack shaft B
	55		DSTB unit
	56		Rack set plate assembly A
	57		Disc clamper
	58		Slit plate V
	59		Rack set plate assembly B

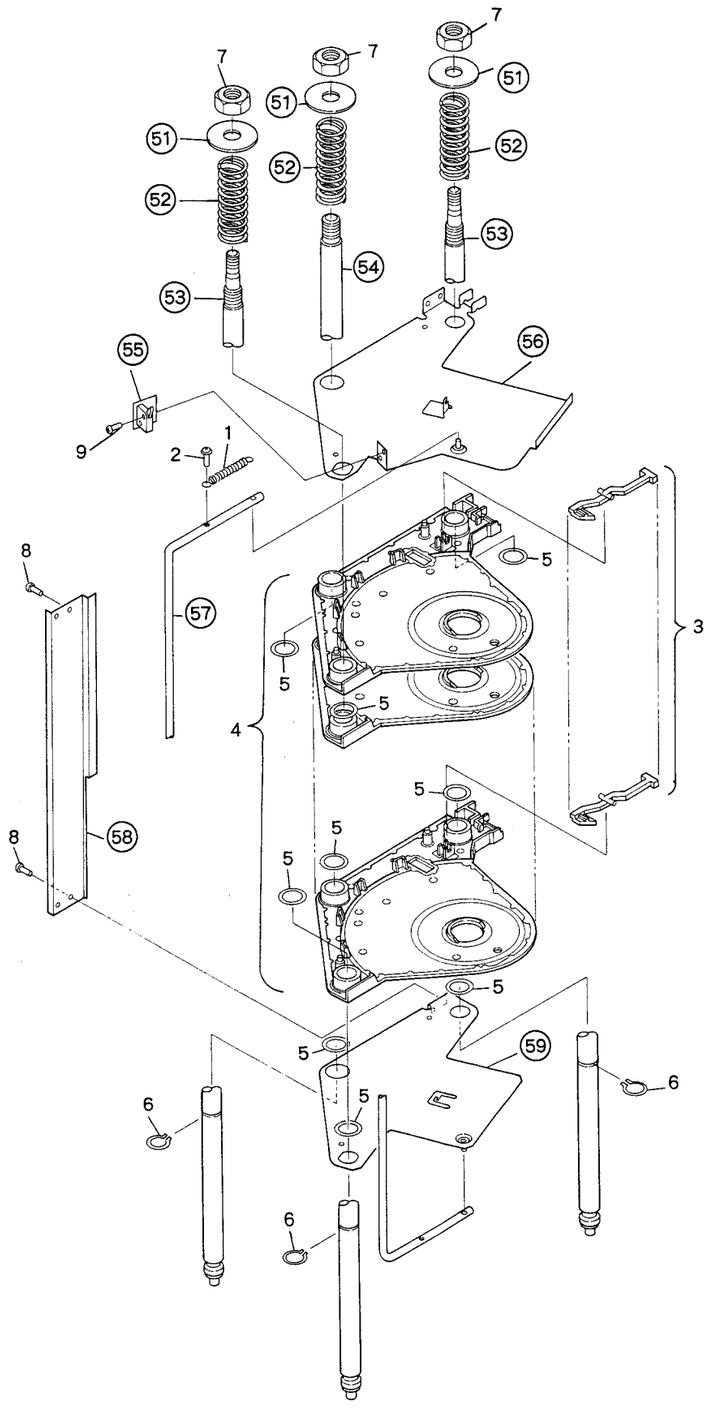

3.2.8 LDP ASSEMBLY (DXX1170)

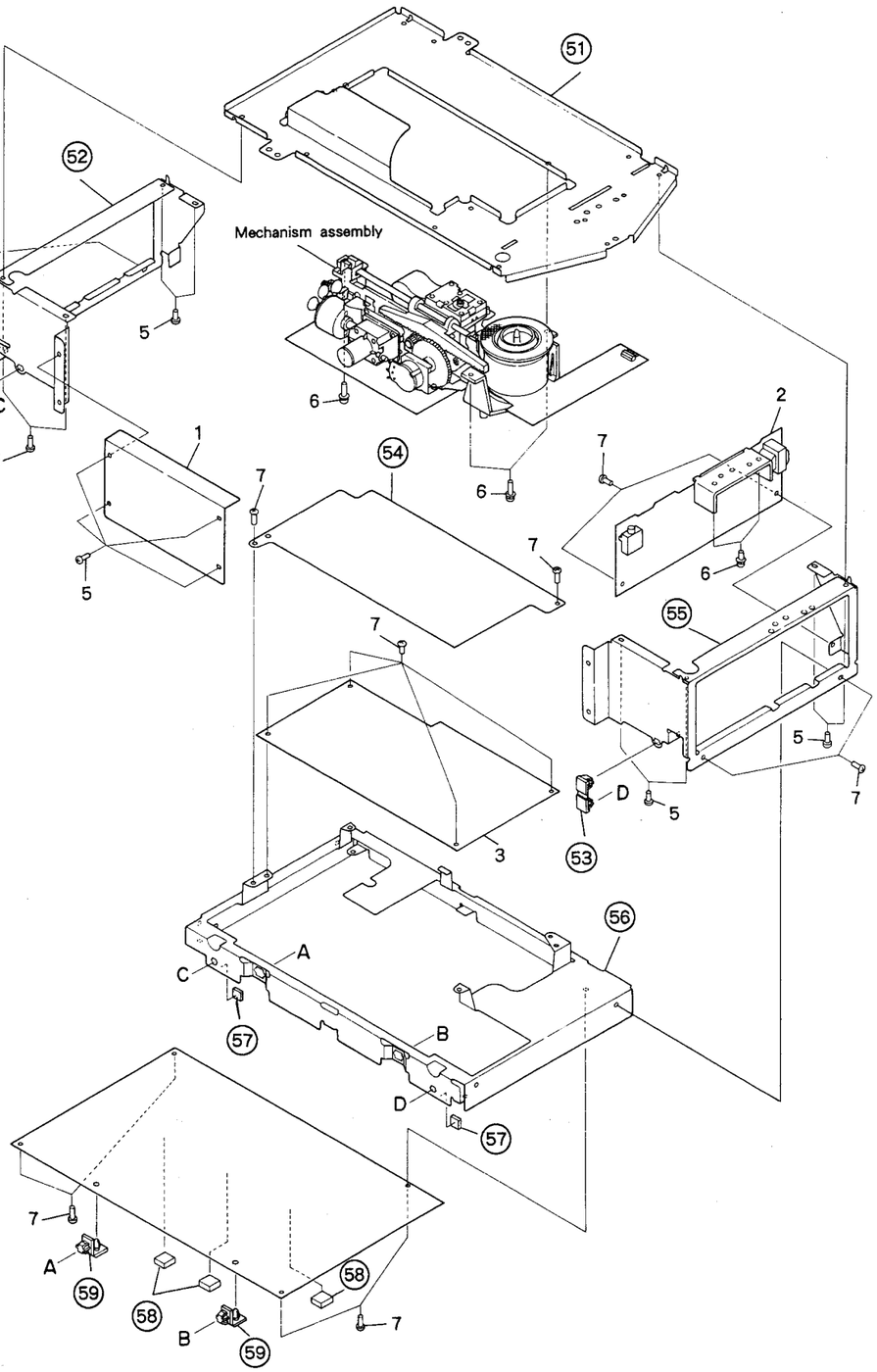

Parts List

Mark	No.	Part No.	Description
◉	1	DEC1093	LF cover
◉	2	DWP1010	DRIF unit
◉	3	DWV1027	DEMB unit
◉	4	DWS1050	SRVB unit
	5	BBZ30P060FZK	Screw
	6	PMB30P100FZK	Screw
	7	BBZ30P080FMC	Screw
	51		LVP base
	52		Side cover L
	53		Hinge
	54		Sealed plate
	55		Side cover R
	56		P.C.B holder
	57		SR spacer
	58		Spacer cushion
	59		P.C.B hinge

3.2.9 MECHANISM ASSEMBLY

Parts List

Mark	No.	Part No.	Description
	1	VWY1005	Pick-up assembly
	2	VXA-394	Roller arm assembly
	3	DMA1001	Slider
	4	DLA1001	Shaft
	5	DLA1137	Centering hab
	6	DBH1032	Centering spring
	7	VEB1008	Rubber spacer
	8	DXM1018	Spindle motor
	9	VXA-387	Tilt shaft assembly
	10	VBH-142	Tilt spring
	11	VNV-036	Tilt nut
	12	VXM-060	Tilt motor (TILT)
	13	PSN-003	Leaf switch (TILT LIMIT.S5)
	14	VNE-701	Switch regurator plate
	15	VEC-143	Plastic rivet
	16	VXM-076	Slider motor (SLIDER)
	17	VNL-623	Slider pinion
	18	VBH-138	Slider motor spring
	19	VBH-175	Potention meter spring
	20	DWV1009	PREB unit
	21	VXA-439	PM holder assembly
	22	VLL-311	Washer
	23	RNH-184	Cord holder
	24	VBH-140	Torsion spring
	25	VLL-310	PM washer
	26	VNL-508	Potention pinion B
	27	DSC1006	Potention meter
	28		• • • • •
	29		• • • • •
	30		• • • • •
	31	PMB30P080FMC	Screw
	32	PMB30P100FMC	Screw
	33	ZMD30H080FBT	Screw
	34	ZMD30H060FBT	Screw
	35	ZMD30H120FBT	Screw
	36	BBZ30P060FMC	Screw
	37	PMA26P040FMC	Screw
	38	PMZ20P050FMC	Screw
	39	PMB26P060FMC	Screw
	40	AMZ26P070FMC	Screw
	41		• • • • •
	42	YE20FUC	Washer
	43	VLL1001	Coller
	44	WA62N120W020	Washer
	45	YC60FBT	Washer
	46	VLL-045	Plate
	47	CMZ26P140FZK	Screw
	48	DEC1083	Center sheet
	49	VNE-807	Filter holder
	50	VCG-005	Thrn type capacitor
	101		Mchanism chassis assembly
	102		Cushion rubber (A)
	103		Cushion rubber (B)
	104		Tilt holder
	105		Insulator bushing
	106		Motor holder assembly
	107		Tilt base
	108		PM support

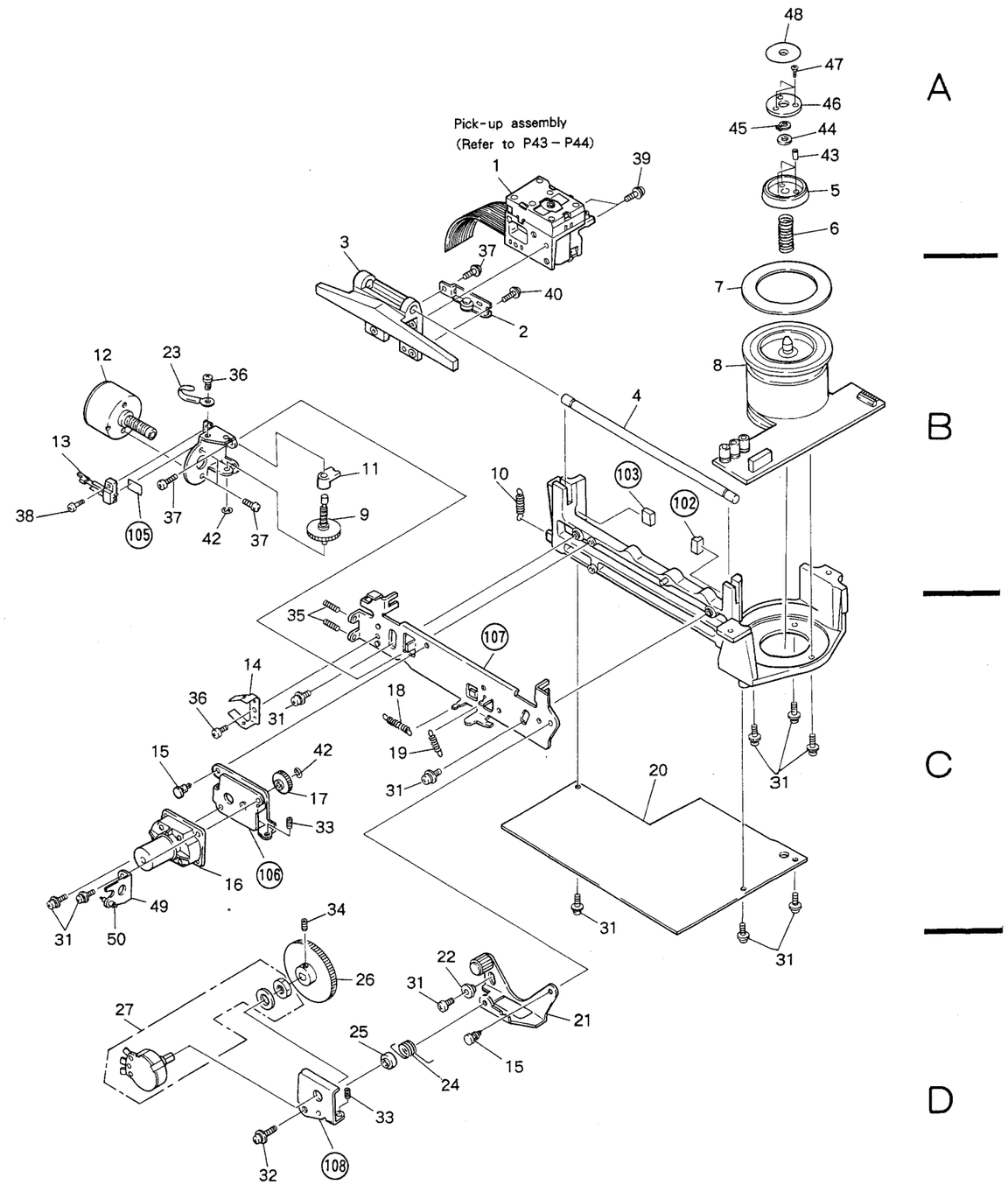

3.2.10 PICK-UP ASSEMBLY (VWY1005)

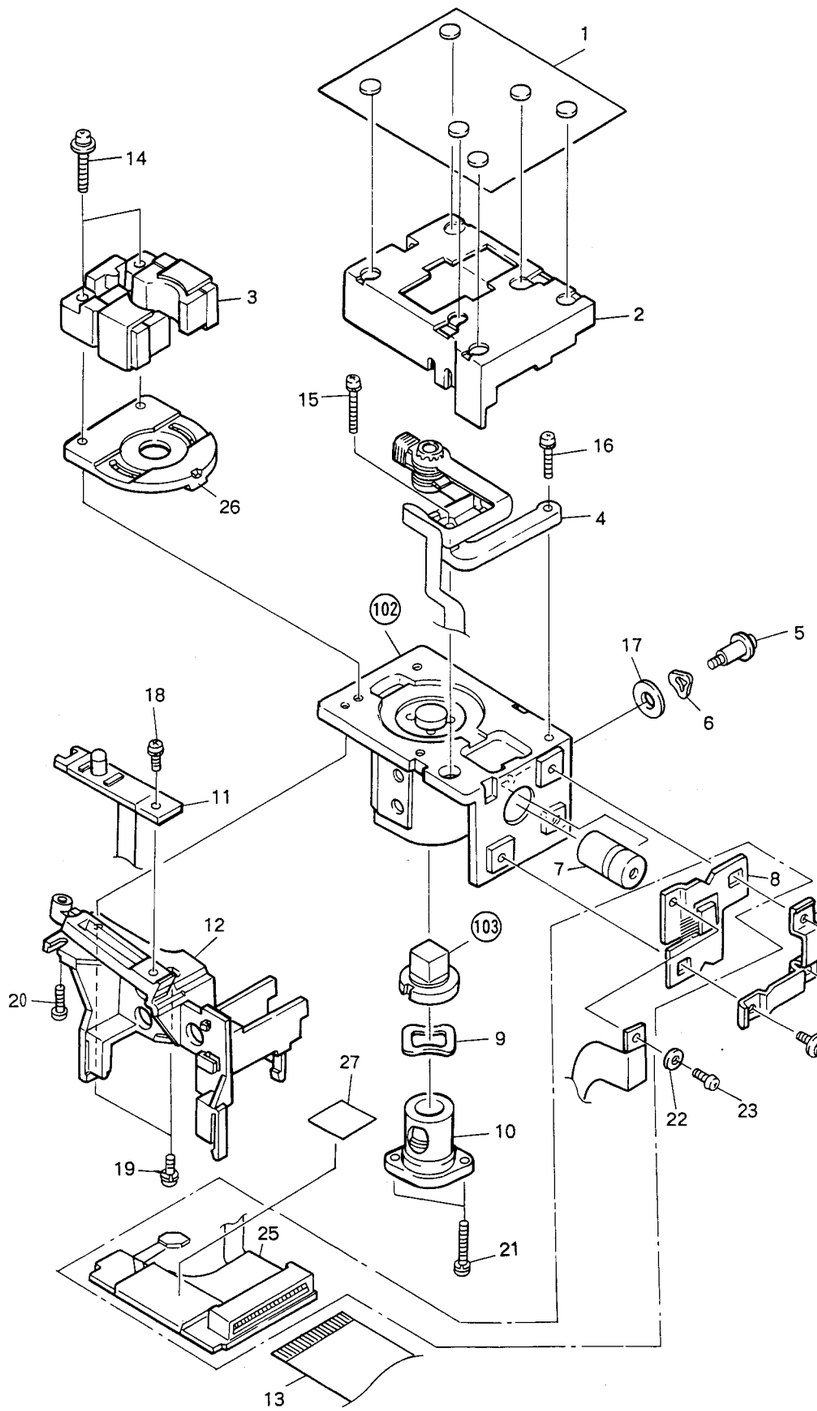

Parts List

Mark	No.	Part No.	Description
	1	VED-034	Pad
	2	VNH-057	Actuator cover
	3	VGX-063	Magnetic circuit assembly
	4	VGX-069	Objective lens assembly
	5	VLL-292	Screw 5
	6	PBE-020	Washer (A)
	7	VGX-064	Multi lens assembly
	8	VGX-065	PD assembly
	9	PBE-022	Washer (B)
	10	VGX-066	LD assembly
	11	VEX-022	Sensor assembly
	12	VNH-056	Sensor stay
	13	VDA-108	Card
	14	PBM20P120FMC	Screw
	15	PMA20P140FMC	Screw
	16	PMA20P080FMC	Screw
	17	WA40F100M050	Washer
	18	PPZ20P050FMC	Screw
	19	PMB20P050FMC	Screw
	20	PBZ20P080FMC	Screw
	21	PMA26P080FMC	Screw
	22	WA20W050R050	Washer
	23	PMA20P040FMC	Screw
	24	PMA26P060FMC	Screw
	25	VWV-079	HEAD assembly
	26	VGX1005	Wave length plate assembly
	27	VEB1002	Sheet
	101		PD spring
	102		Optical body
	103		Prism assembly

INSTALLING THE HEAD ASSEMBLY

The Head assembly is supplied with the flexible parts not bent ; therefore, use the following procedure to process.

1. Bend as shown by the arrow in Fig. 1 and fasten using double-sided tape and adhesive.
2. With the flexible parts bent as shown in Fig. 1, mount on the pick-up.
3. Mount the flex strip that connects the disc tilt detection PCB and the TRKG and FOCS coils on the Head assembly as shown in Fig. 2.

Note :

The copper foil of the flex strip has little resistance to heat ; therefor, soldering should be performed as quickly as possible. Apply the soldering iron to the Head assembly, not to the flex strip.

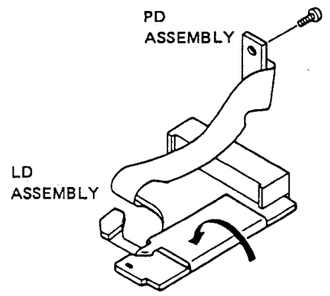

Fig. 1

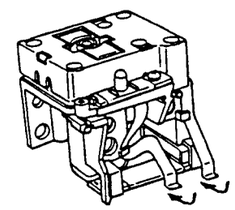

Fig. 2

3.3 SCHEMATIC DIAGRAM AND P.C. BOARDS PATTERN

3.3.1 MAIN BODY

3.3.1.1 OVERALL CONNECTION DIAGRAM

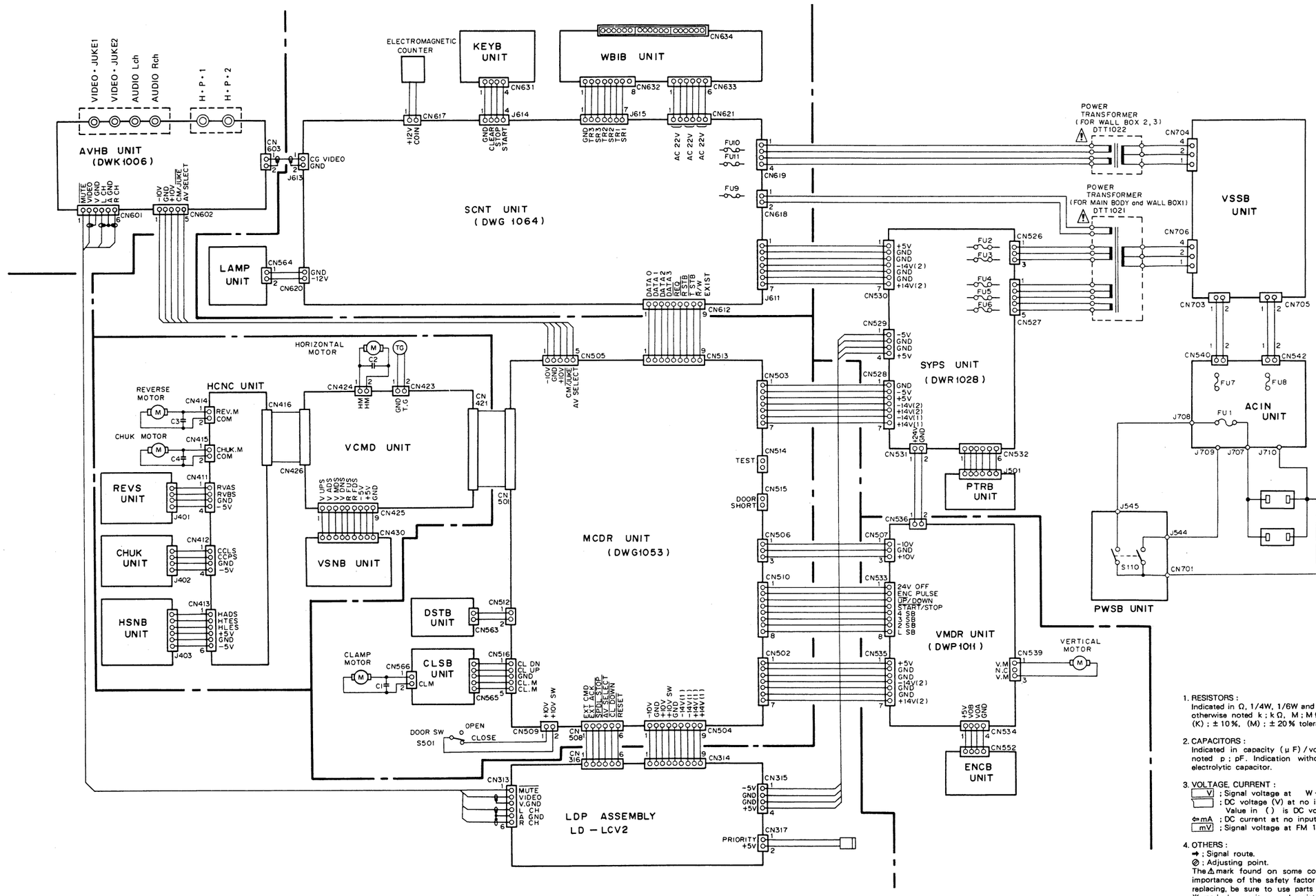

1. RESISTORS :
   Indicated in Ω, 1/4W, 1/6W and 1/8W, ±5% tolerance unless otherwise noted k ; kΩ, M ; MΩ, (F) ; ±1%, (G) ; ±2%, (K) ; ±10%, (M) ; ±20% tolerance.

2. CAPACITORS :
   Indicated in capacity (μF) / voltage (V) unless otherwise noted p ; pF. Indication without voltage is 50V except electrolytic capacitor.

3. VOLTAGE, CURRENT :
   V ; Signal voltage at W+ W, 8Ω output (1kHz).
   ; DC voltage (V) at no input signal.
   Value in ( ) is DC voltage at rated power.
   ⇦mA ; DC current at no input signal.
   mV ; Signal voltage at FM 1kHz ± 75Hz DEV.

4. OTHERS :
   ➡ ; Signal route.
   ⊘ ; Adjusting point.
   The ⚠ mark found on some component parts indicates the importance of the safety factor of the part. Therefore, when replacing, be sure to use parts of identical designation.
   ※ marked capacitors and resistors have parts numbers.

This is the basic schematic diagram, but the actual circuit may vary due to improvements in design.

3.3.1.2 LASER JUKE BOX SYSTEM CONTROL SECTION

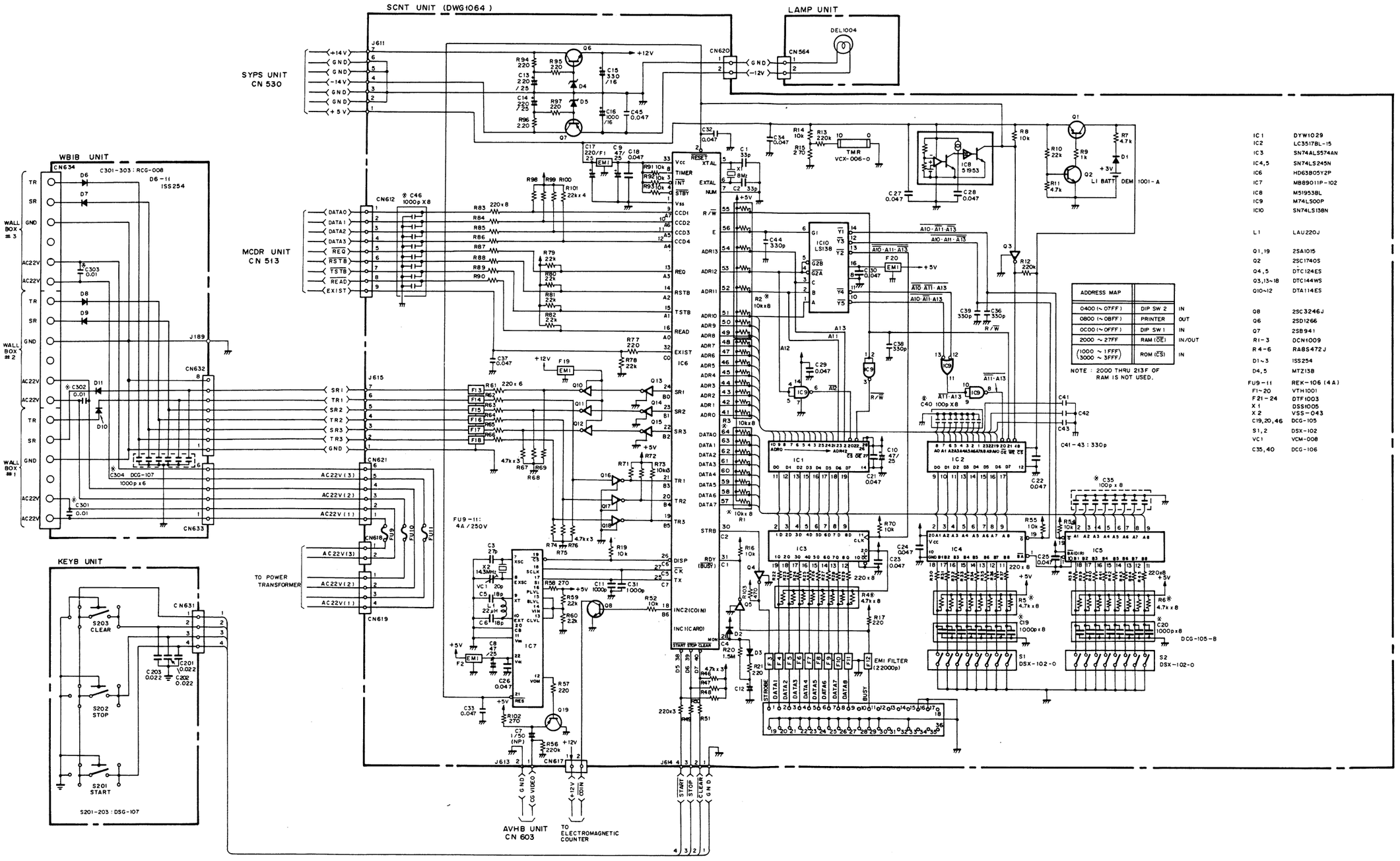

ADDRESS MAP		
0400 (~ 07FF)	DIP SW 2	IN
0800 (~ 0BFF)	PRINTER	OUT
0C00 (~ 0FFF)	DIP SW 1	IN
2000 ~ 27FF	RAM ($\overline{OE}$)	IN/OUT
(1000 ~ 1FFF) (3000 ~ 3FFF)	ROM ($\overline{CS}$)	IN

IC1	DYW1029
IC2	LC3517BL-15
IC3	SN74ALS574AN
IC4,5	SN74LS245N
IC6	HD63B05Y2P
IC7	MB89011P-102
IC8	M51953BL
IC9	M74LS00P
IC10	SN74LS138N
L1	LAU220J
Q1,19	2SA1015
Q2	2SC1740S
Q4,5	DTC124ES
Q3,13~18	DTC144WS
Q10~12	DTA114ES
Q8	2SC3246J
Q6	2SD1266
Q7	2SB941
R1~3	DCN1009
R4~6	RABS472J
D1~3	1SS254
D4,5	MTZ13B
FU9~11	REK-106 (4A)
F1~20	VTH1001
F21~24	DTF1003
X1	DSS1005
X2	VSS-043
C19,20,46	DCG-105
S1,2	DSX-102
VC1	VCM-008
C35,40	DCG-106

P.C.B. pattern diagram indication	Corresponding part symbol	Part name	P.C.B. pattern diagram indication	Corresponding part symbol	Part name
		Transistor			Ceramic capacitor
		FET			Mylar capacitor
		Diode			Styrol capacitor
					Electrolytic capacitor (Non polarized)
					Electrolytic capacitor (Noiseless)
		Zenner diode			Electrolytic capacitor (Polarized)
					Electrolytic capacitor (Polarized)
		LED			Power capacitor
		Varactor			Semi-fixed resistor
		Tact switch			Resistor array
					Resistor
		Inductor			
		Coil			Resonator
		Transformer			Thermistor
		Filter			

1. This P.C.B. connection diagram is viewed from the parts mounted side.
2. The parts which have been mounted on the board can be replaced with those shown with the corresponding wiring symbols listed in the above Table.
3. The capacitor terminal marked with ▭ shows negative terminal.
4. The diode marked with O shows cathode side.
5. The transistor terminal marked with ▭ shows emitter.

SCNT UNIT (DWG1064)

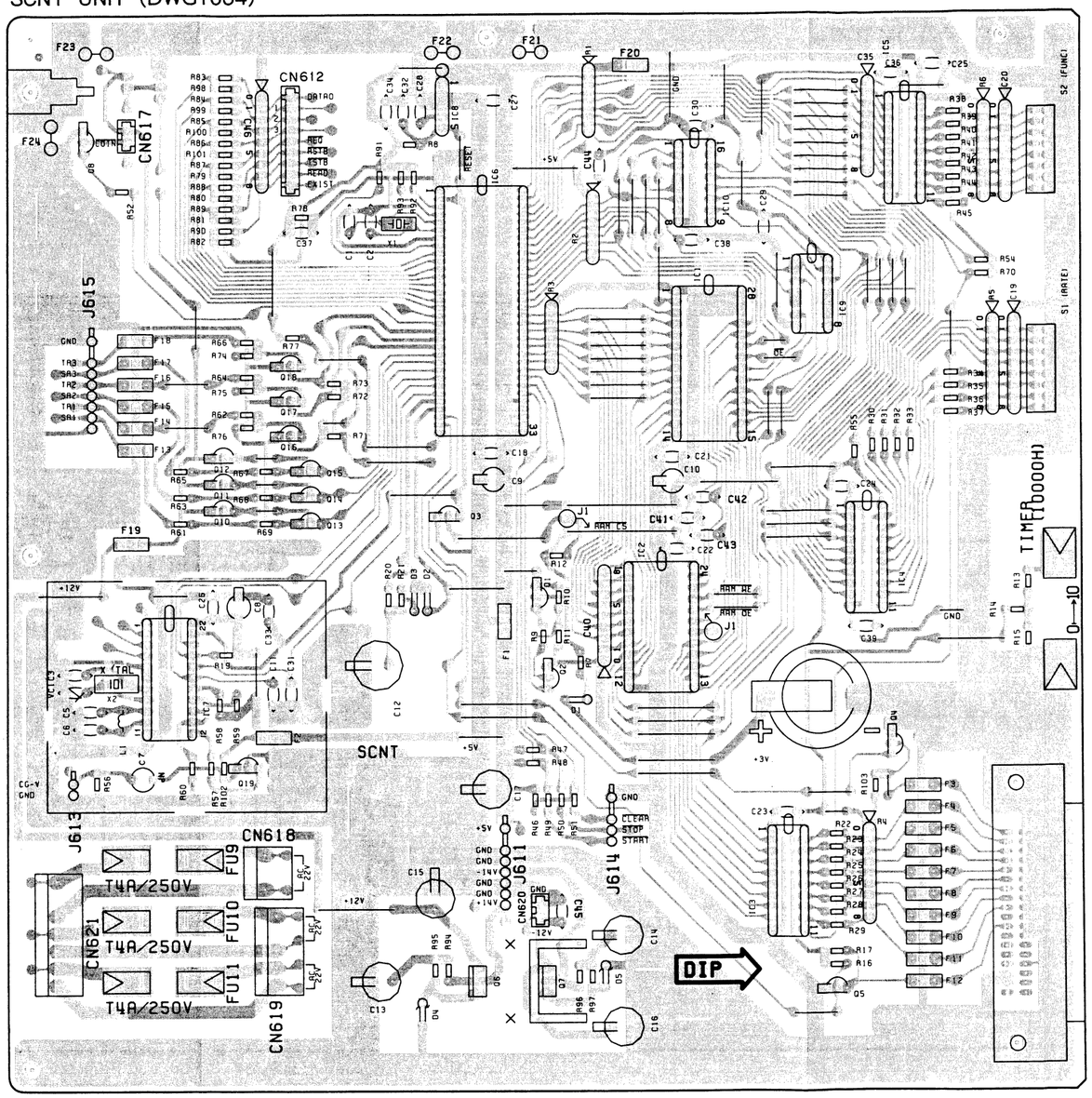

WBIB UNIT

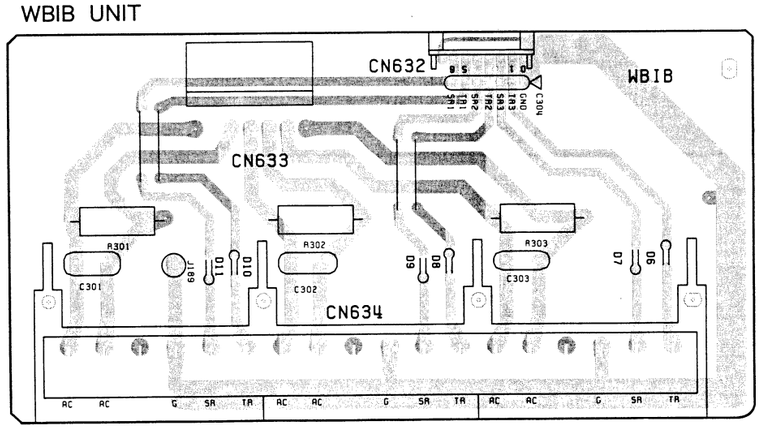

LAMP UNIT

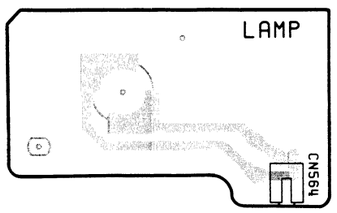

KEYB UNIT

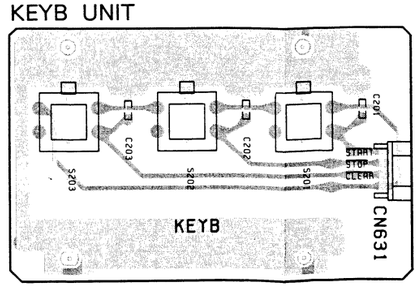

3.3.1.3 VIDEO, AUDIO OUTPUT SECTION

AVHB UNIT (DWK1006)

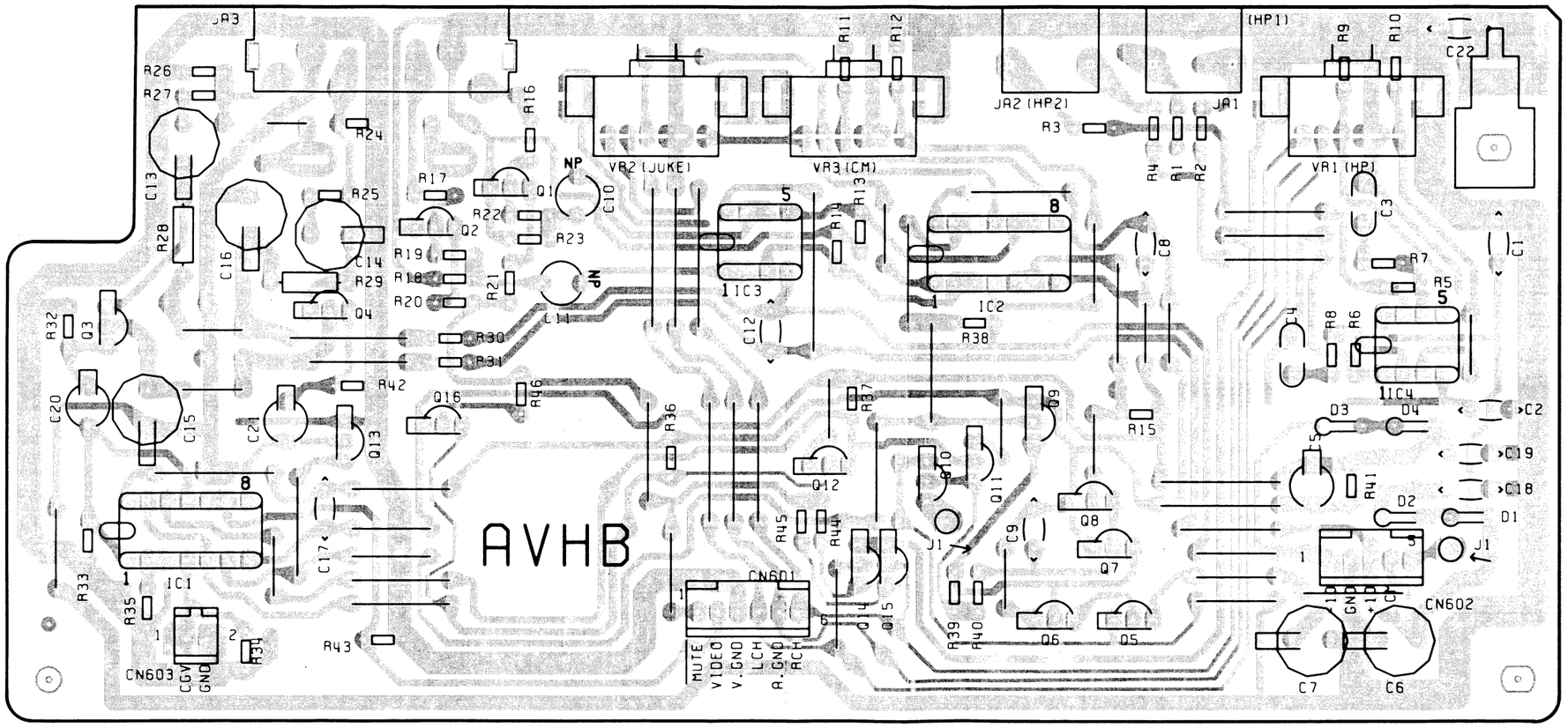

AVHB UNIT (DWK1006)

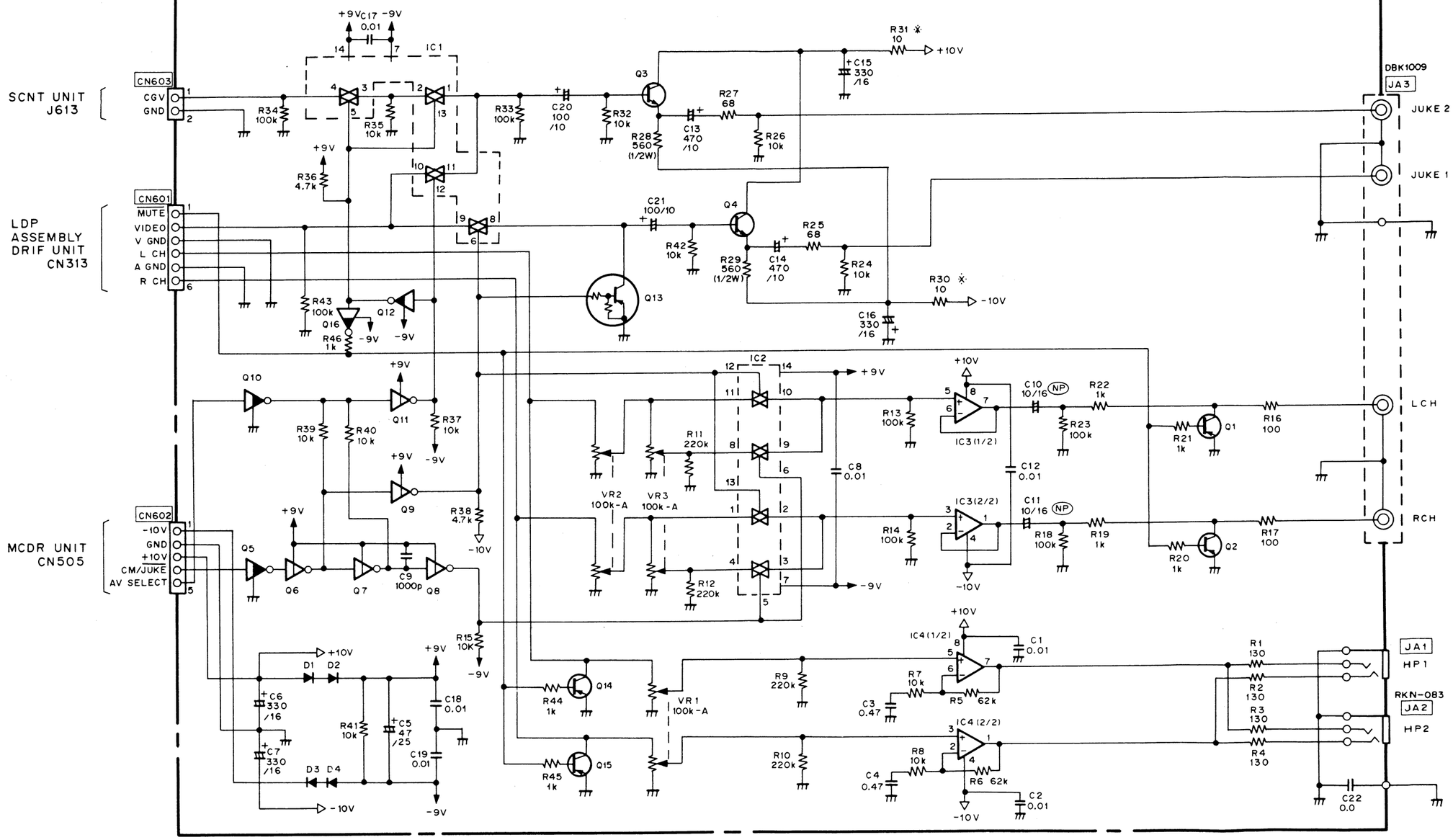

IC1,2	: TC4066BP	VR1,2,3	: DCS-117
IC3	: NJM4558DX	R30,31	: DCN1002
IC4	: NJM4556DE	Q16	: DTC144WS
Q1,2,14,15	: 2SA933S		
Q3,4	: 2SC3581		
Q5,10,12	: DTC124ES		
Q6~9,11,13	: DTA124ES		
D1~4	: ISS254		

3.3.1.4 POWER SUPPLY SECTION

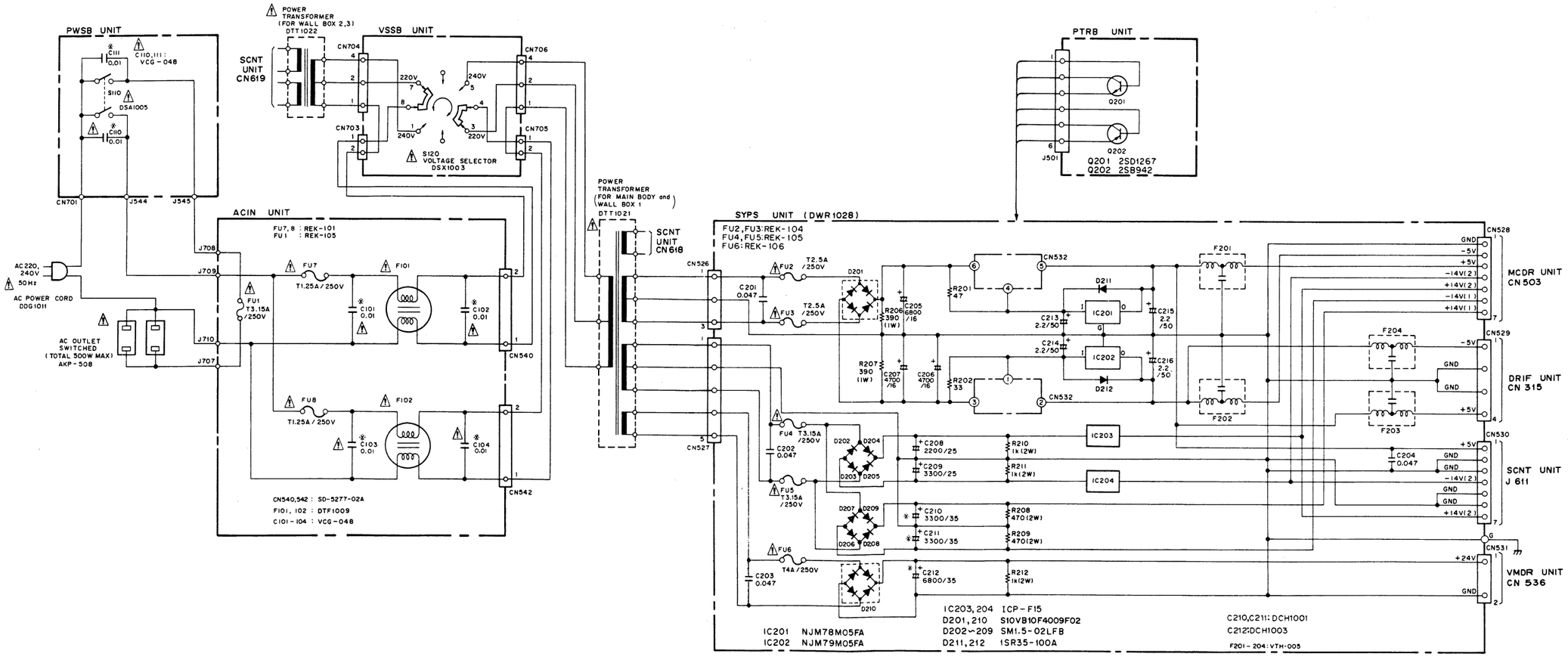

VSSB UNIT

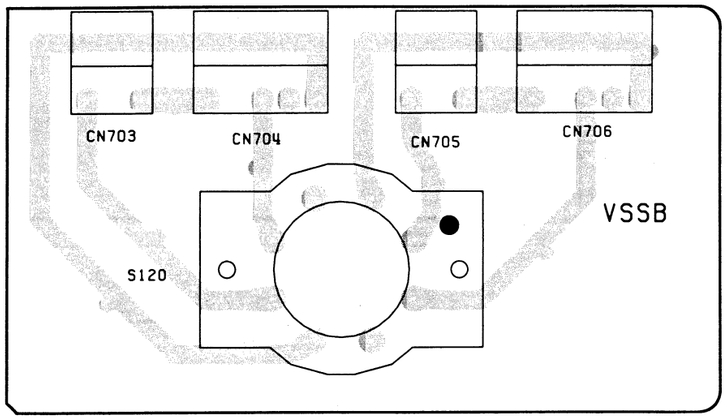

ACIN UNIT

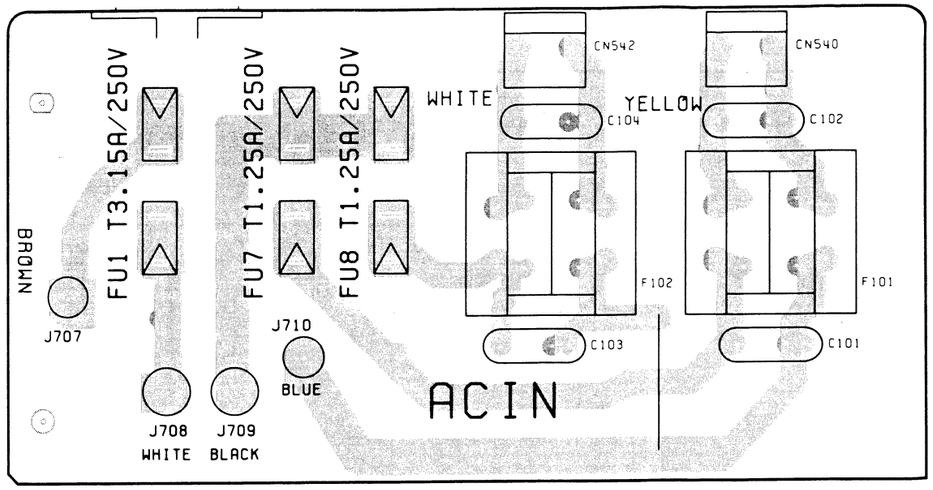

SYPS UNIT (DWR1028)

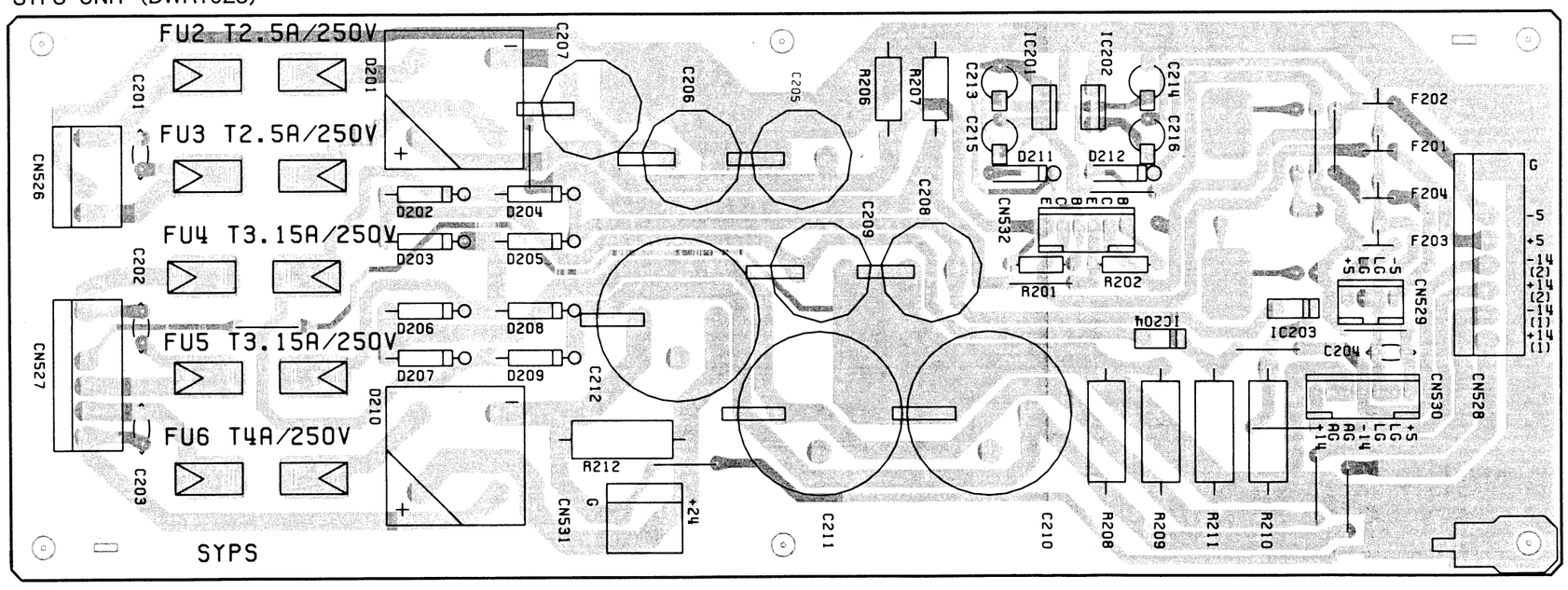

PWSB UNIT

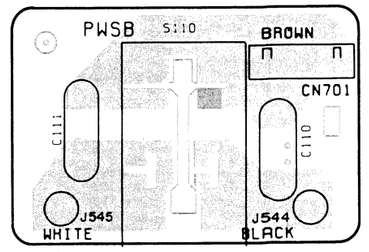

PTRB UNIT

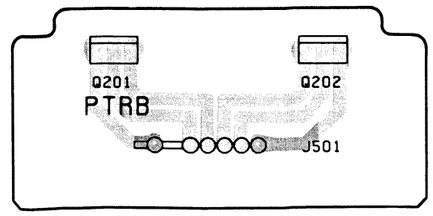

3.3.1.5 CHANGER CONTROL SECTION

MCDR UNIT (DWG1053)

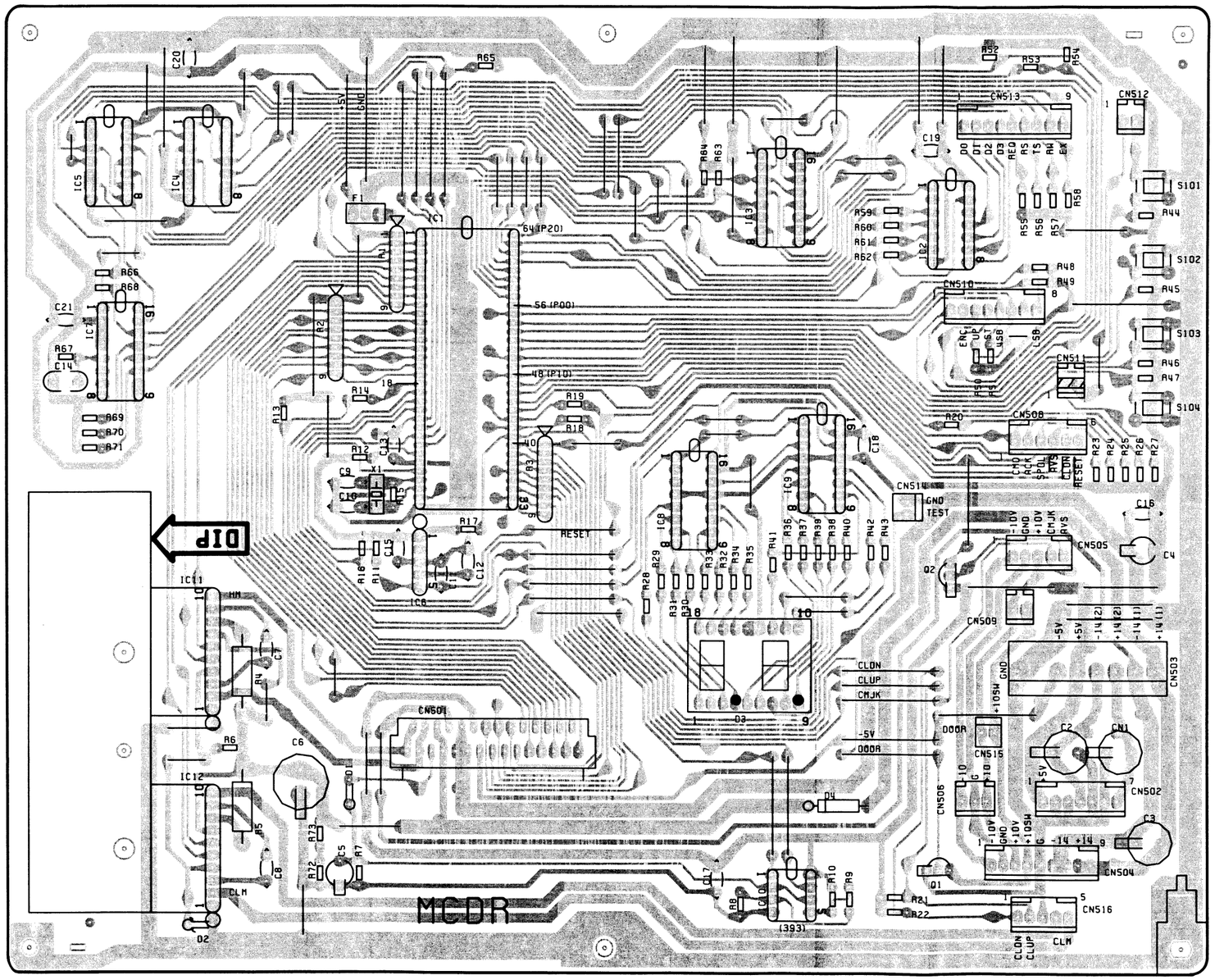

CLSB UNIT

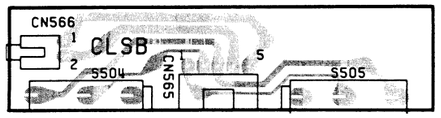

DSTB UNIT

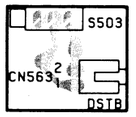

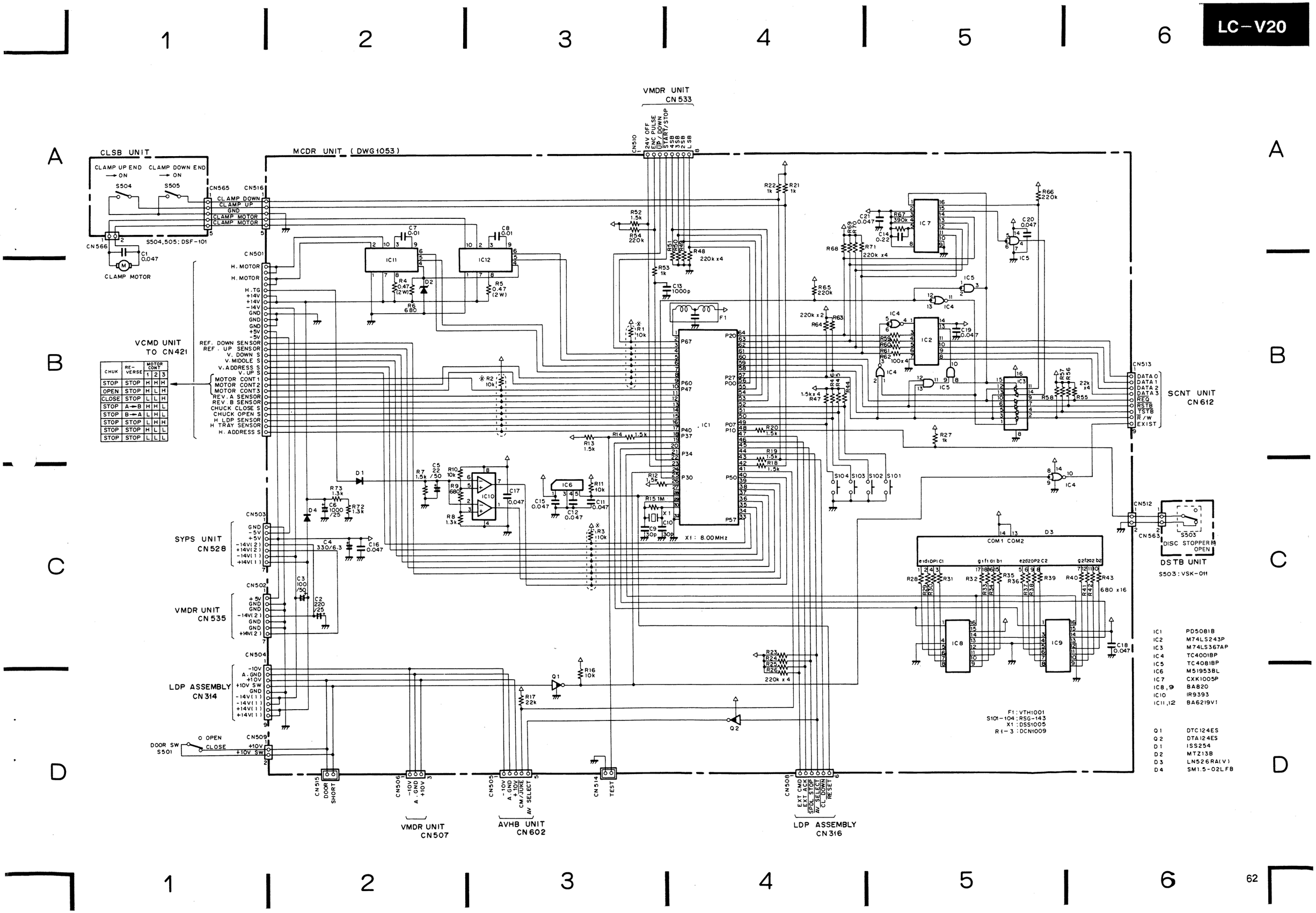
VMDR UNIT
CN533
MCDR UNIT (DWG1053)
CLSB UNIT
CLAMP UP END
CLAMP DOWN END
S504
S505
CN565
CN516
CLAMP DOWN
CLAMP UP
GND
CLAMP MOTOR
CLAMP MOTOR
CN566
S504,505: DSF-101
CLAMP MOTOR
CN501
H. MOTOR
H. MOTOR
H. TG
+14V
+14V
-14V
GND
GND
GND
+5V
-5V
REF. DOWN SENSOR
REF. UP SENSOR
V. DOWN S
V. MIDDLE S
V. ADDRESS S
V. UP S
MOTOR CONT 1
MOTOR CONT 2
MOTOR CONT 3
REV. A SENSOR
REV. B SENSOR
CHUCK CLOSE S
CHUCK OPEN S
H. LDP SENSOR
H. TRAY SENSOR
H. ADDRESS S
VCMD UNIT
TO CN421
CHUK
REVERSE
MOTOR CONT
STOP STOP H H H
OPEN STOP H L H
CLOSE STOP L L H
STOP A→B H H L
STOP B→A L H L
STOP STOP L H H
STOP STOP H L L
STOP STOP L L L
SYPS UNIT
CN528
CN503
GND
-5V
+5V
-14V(2)
+14V(2)
-14V(1)
+14V(1)
VMDR UNIT
CN535
CN502
+5V
GND
GND
-14V(2)
GND
GND
+14V(2)
LDP ASSEMBLY
CN314
CN504
-10V
A. GND
+10V
+10V SW
GND
-14V(1)
-14V(1)
+14V(1)
+14V(1)
DOOR SW
S501
OPEN
CLOSE
CN509
+10V
+10V SW
CN510
24V OFF
ENC PULSE
UP/DOWN
START/STOP
4SB
3SB
2SB
LSB
IC11
IC12
IC1
IC2
IC3
IC4
IC5
IC6
IC7
IC8
IC9
IC10
IC11
IC12
X1: 8.00MHz
CN513
DATA 0
DATA 1
DATA 2
DATA 3
REQ
RSTB
TSTB
R/W
EXIST
SCNT UNIT
CN612
CN512
CN563
S503
DISC STOPPER
OPEN
DSTB UNIT
S503: VSK-011
COM1 COM2
IC1 PD5081B
IC2 M74LS243P
IC3 M74LS367AP
IC4 TC4001BP
IC5 TC4081BP
IC6 M51953BL
IC7 CXK1005P
IC8,9 BA820
IC10 IR9393
IC11,12 BA6219V1
Q1 DTC124ES
Q2 DTA124ES
D1 ISS254
D2 MTZ13B
D3 LN526RA(V)
D4 SM1.5-02LFB
F1: VTH1001
S101-104: RSG-143
X1: DSS1005
R1-3: DCN1009
CN515
DOOR SHORT
CN506
-10V
A. GND
+10V
CN505
-10V
A. GND
+10V
CM/JUKE
AV SELECT
CN514
TEST
CN508
EXT CMD
EXT ACK
SPDL STOP
AV SELECT
CL DOWN
RESET
VMDR UNIT
CN507
AVHB UNIT
CN602
LDP ASSEMBLY
CN316

3.3.1.6 VH BASE SECTION

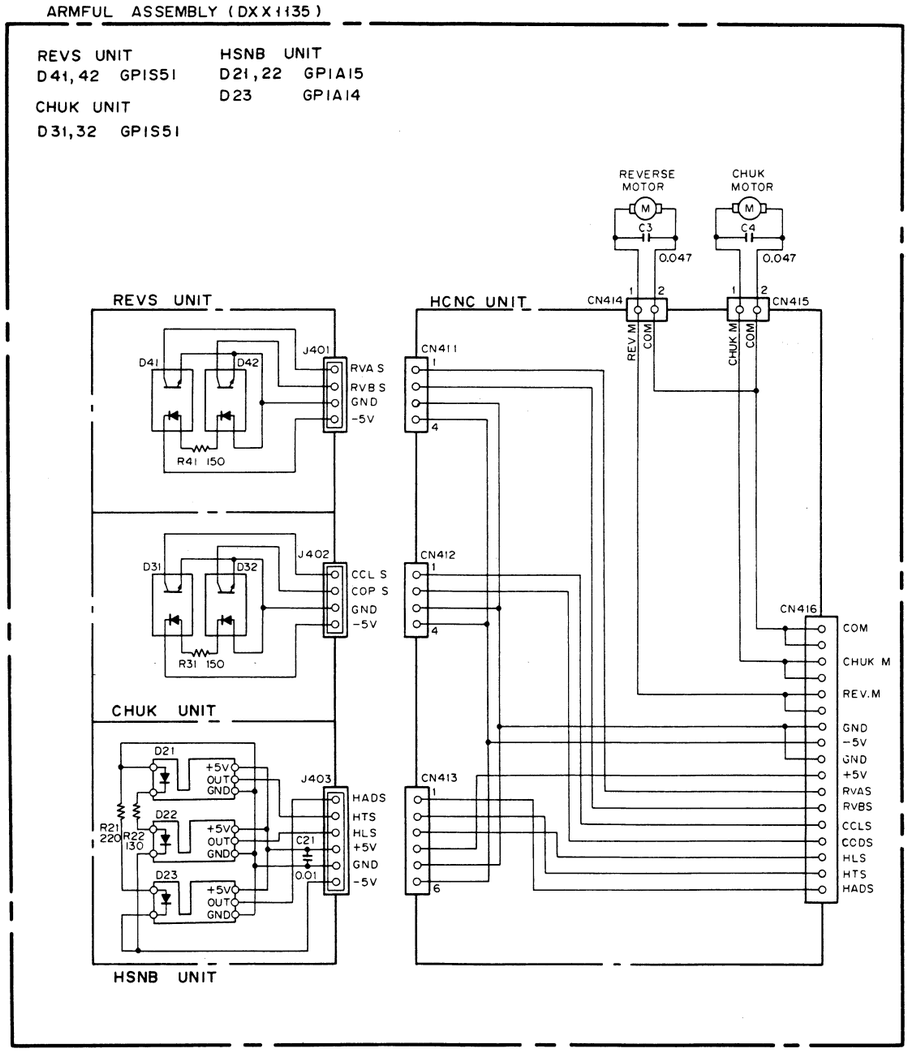

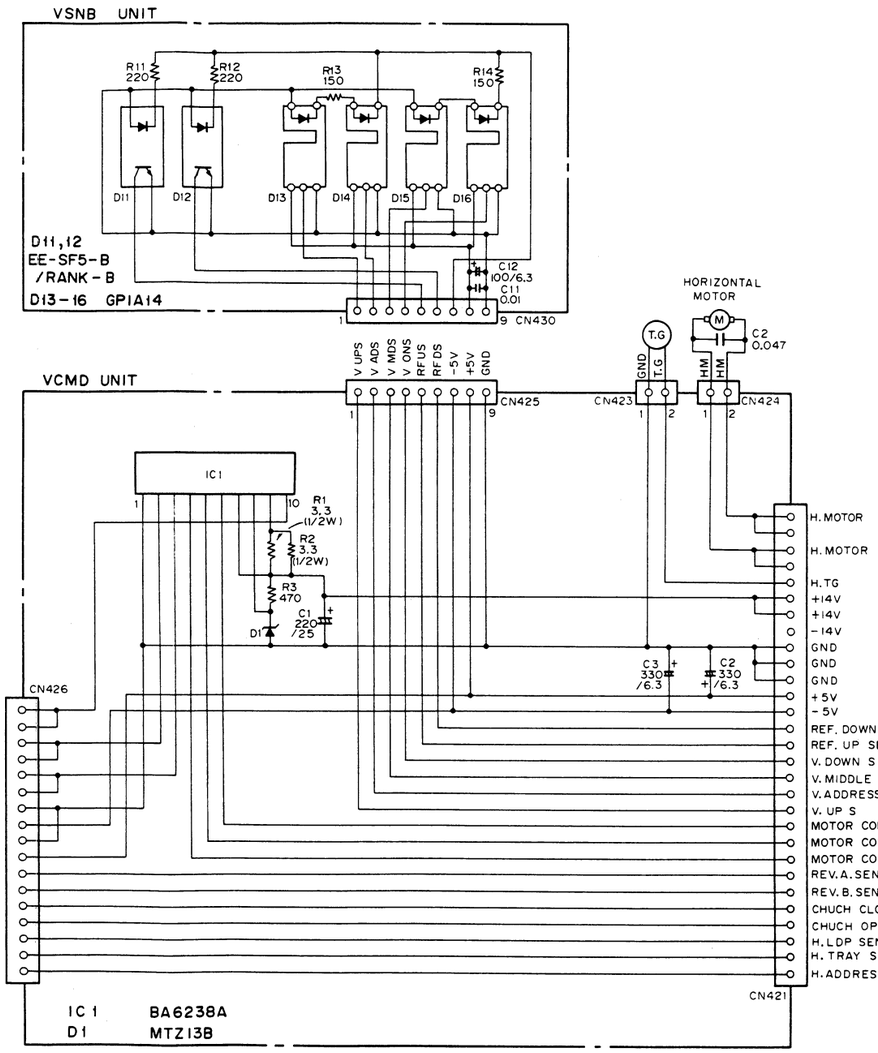

CHUK	REVERSE	MOTOR CONT 1	2	3
STOP	STOP	H	H	H
OPEN	STOP	H	L	H
CLOSE	STOP	L	L	H
STOP	A→B	H	H	L
STOP	B→A	L	H	L
STOP	STOP	L	H	H
STOP	STOP	H	L	L
STOP	STOP	L	L	L

VCMD UNIT

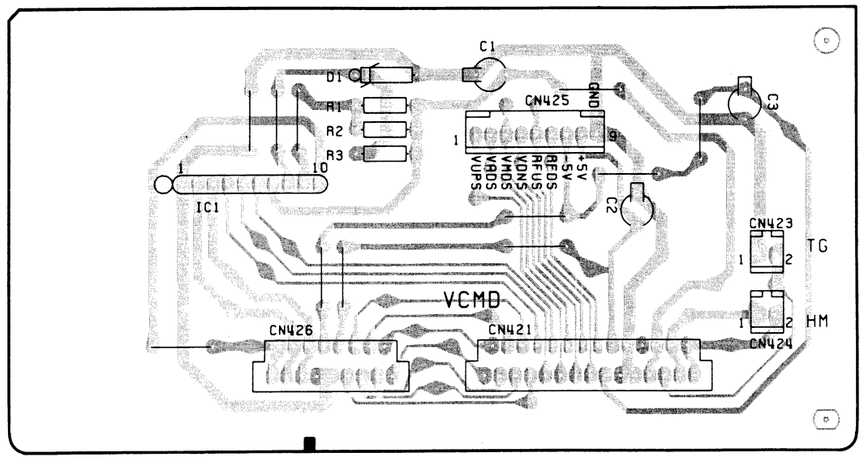

ARMFUL ASSEMBLY (DXX1135)

HCNC UNIT

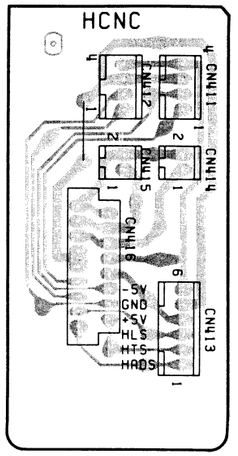

HSNB UNIT

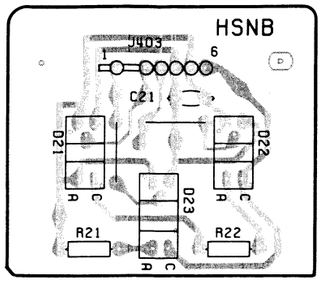

VSNB UNIT

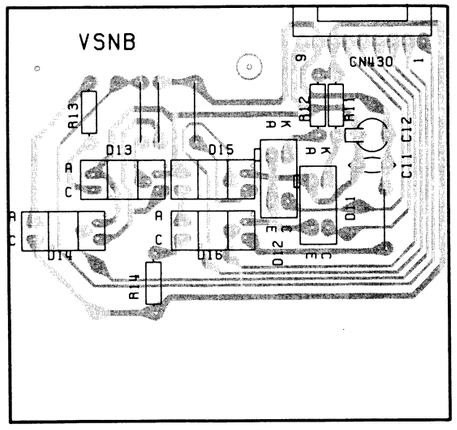

REVS UNIT

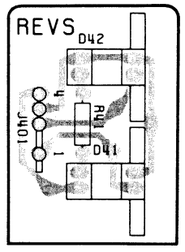

CHUK UNIT

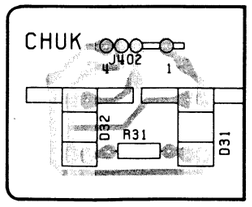

3.3.1.7 VERTICAL MOTOR CONTROL SECTION

VMDR UNIT (DWP1011)

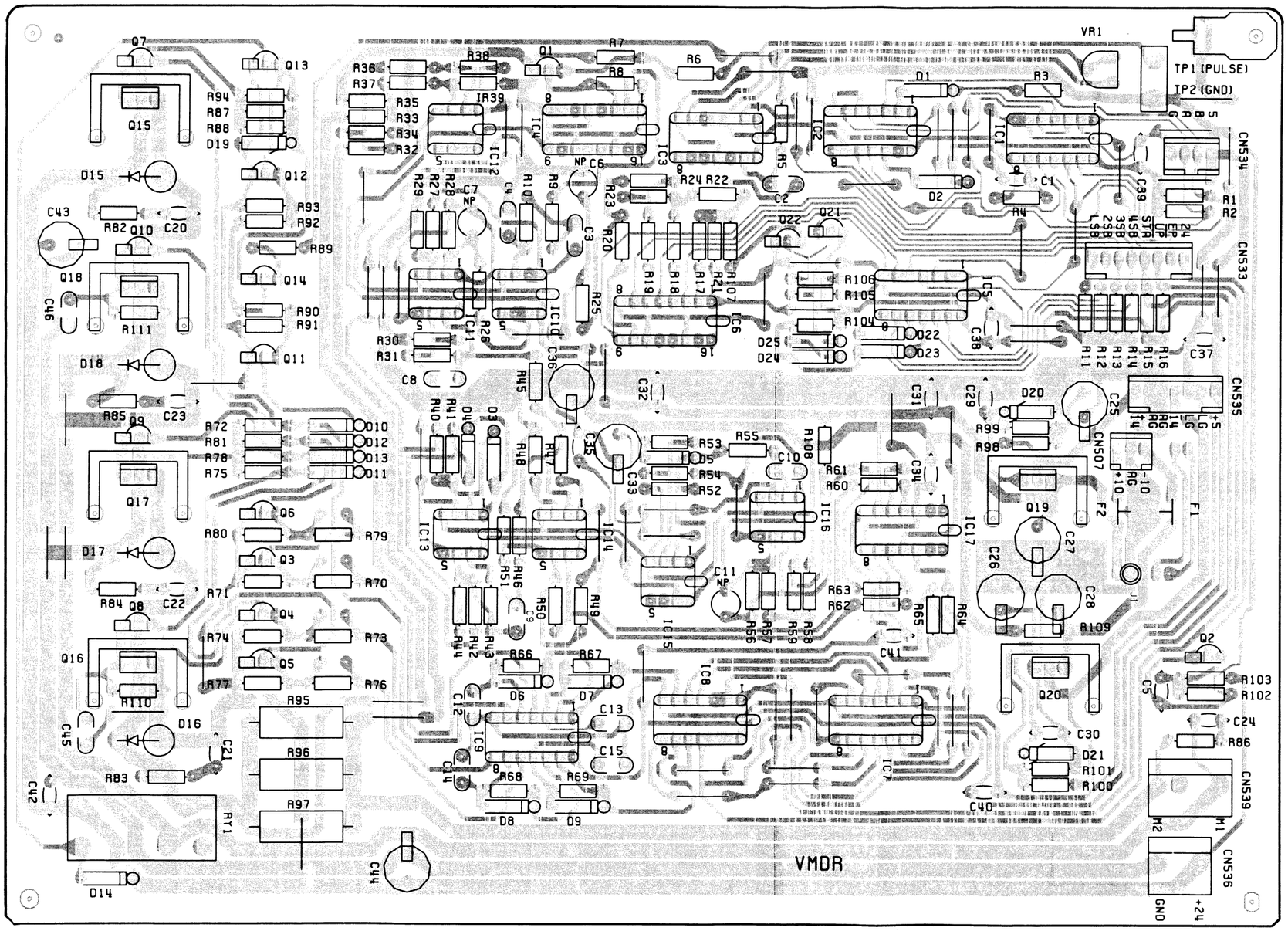

ENCB UNIT

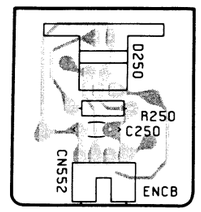

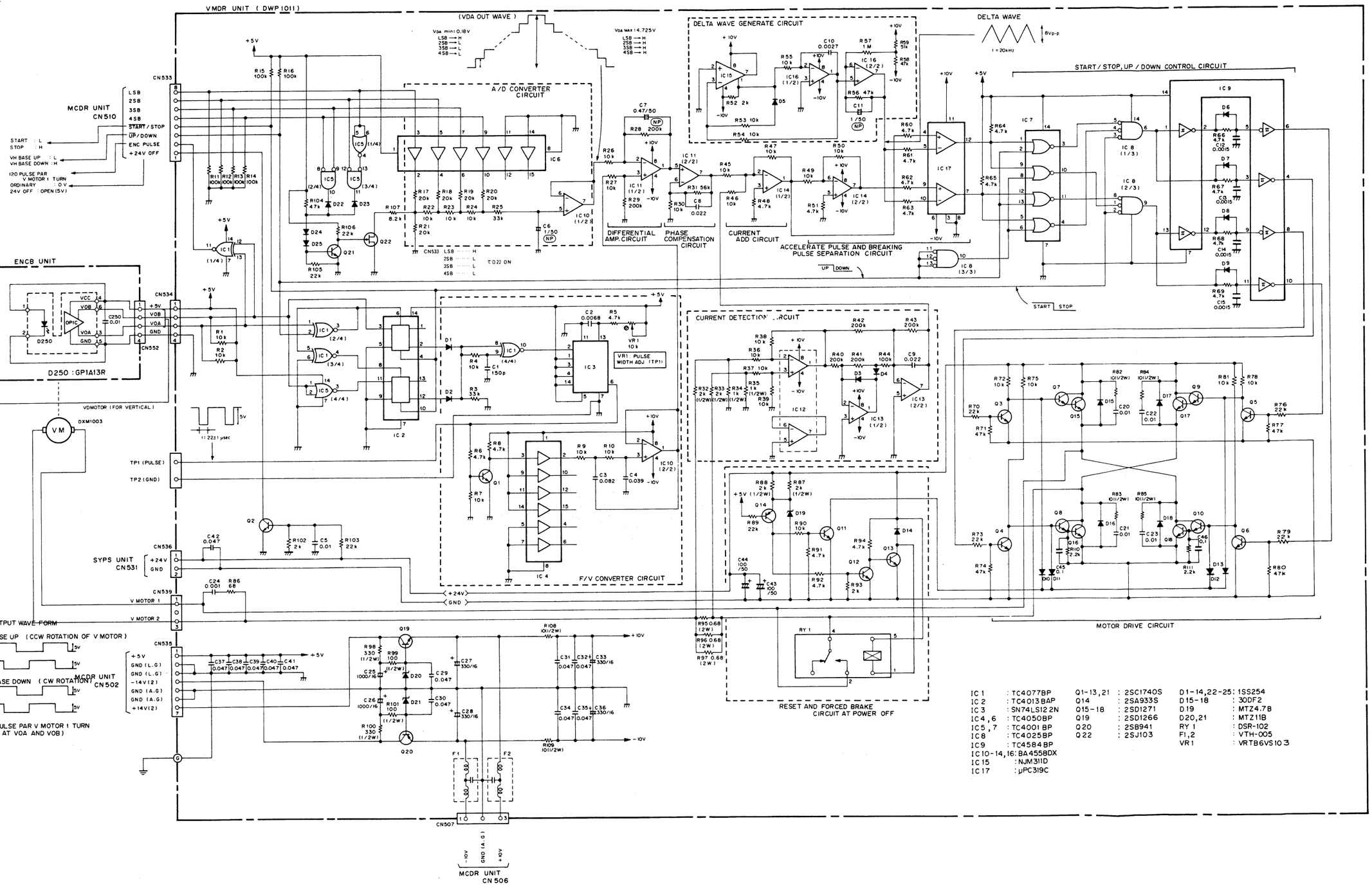
VMDR UNIT (DWP1011)
(VDA OUT WAVE)
DELTA WAVE GENERATE CIRCUIT
DELTA WAVE
START / STOP, UP / DOWN CONTROL CIRCUIT
A/D CONVERTER CIRCUIT
MCDR UNIT CN510
START : L
STOP : H
VH BASE UP : L
VH BASE DOWN : H
120 PULSE PAR V MOTOR 1 TURN
ORDINARY : 0 V
24V OFF : OPEN (5V)
LSB
2SB
3SB
4SB
START / STOP
UP / DOWN
ENC PULSE
+24V OFF
CN533
DIFFERENTIAL AMP. CIRCUIT
PHASE COMPENSATION CIRCUIT
CURRENT ADD CIRCUIT
ACCELERATE PULSE AND BREAKING PULSE SEPARATION CIRCUIT
ENCB UNIT
CN534
CN552
D250 : GP1A13R
VDMOTOR (FOR VERTICAL)
DXM1003
TP1 (PULSE)
TP2 (GND)
CURRENT DETECTION CIRCUIT
VR1 : PULSE WIDTH ADJ (TP11)
F/V CONVERTER CIRCUIT
RESET AND FORCED BRAKE CIRCUIT AT POWER OFF
MOTOR DRIVE CIRCUIT
SYPS UNIT CN531
CN536
CN539
V MOTOR 1
V MOTOR 2
ENCB OUTPUT WAVE FORM
1) VH BASE UP (CCW ROTATION OF V MOTOR)
2) VH BASE DOWN (CW ROTATION)
(60 PULSE PAR V MOTOR 1 TURN AT VOA AND VOB)
MCDR UNIT CN502
CN535
CN507
MCDR UNIT CN506
IC1 : TC4077BP
IC2 : TC4013BAP
IC3 : SN74LS122N
IC4,6 : TC4050BP
IC5,7 : TC4001BP
IC8 : TC4025BP
IC9 : TC4584BP
IC10-14,16 : BA4558DX
IC15 : NJM311D
IC17 : μPC319C
Q1-13,21 : 2SC1740S
Q14 : 2SA933S
Q15-18 : 2SD1271
Q19 : 2SD1266
Q20 : 2SB941
Q22 : 2SJ103
D1-14,22-25 : 1SS254
D15-18 : 30DF2
D19 : MTZ4.7B
D20,21 : MTZ11B
RY 1 : DSR-102
F1,2 : VTH-005
VR1 : VRTB6VS103

3.3.2 LDP ASSEMBLY (DXX1170)

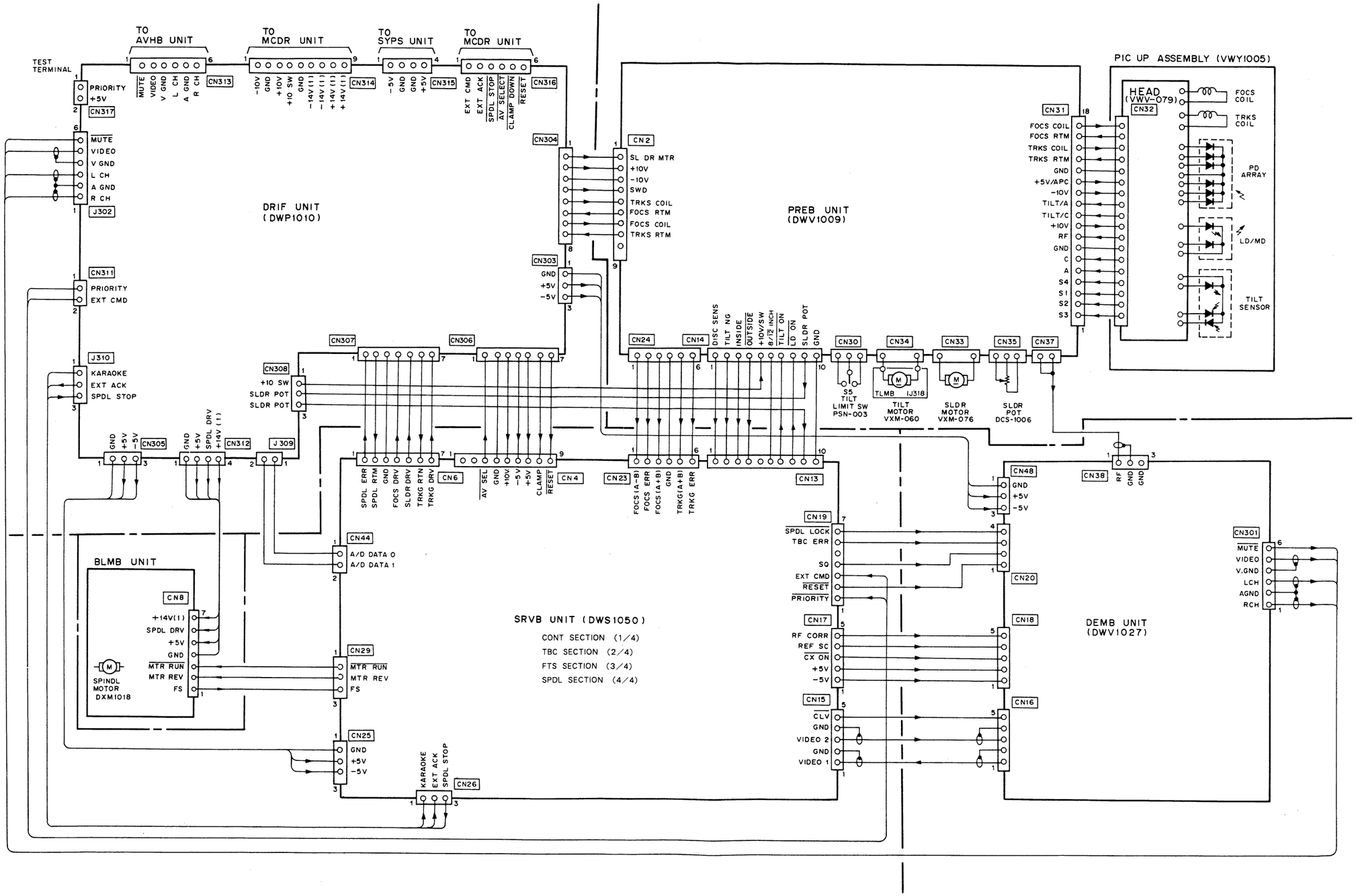

3.3.2.1 CONT SECTION

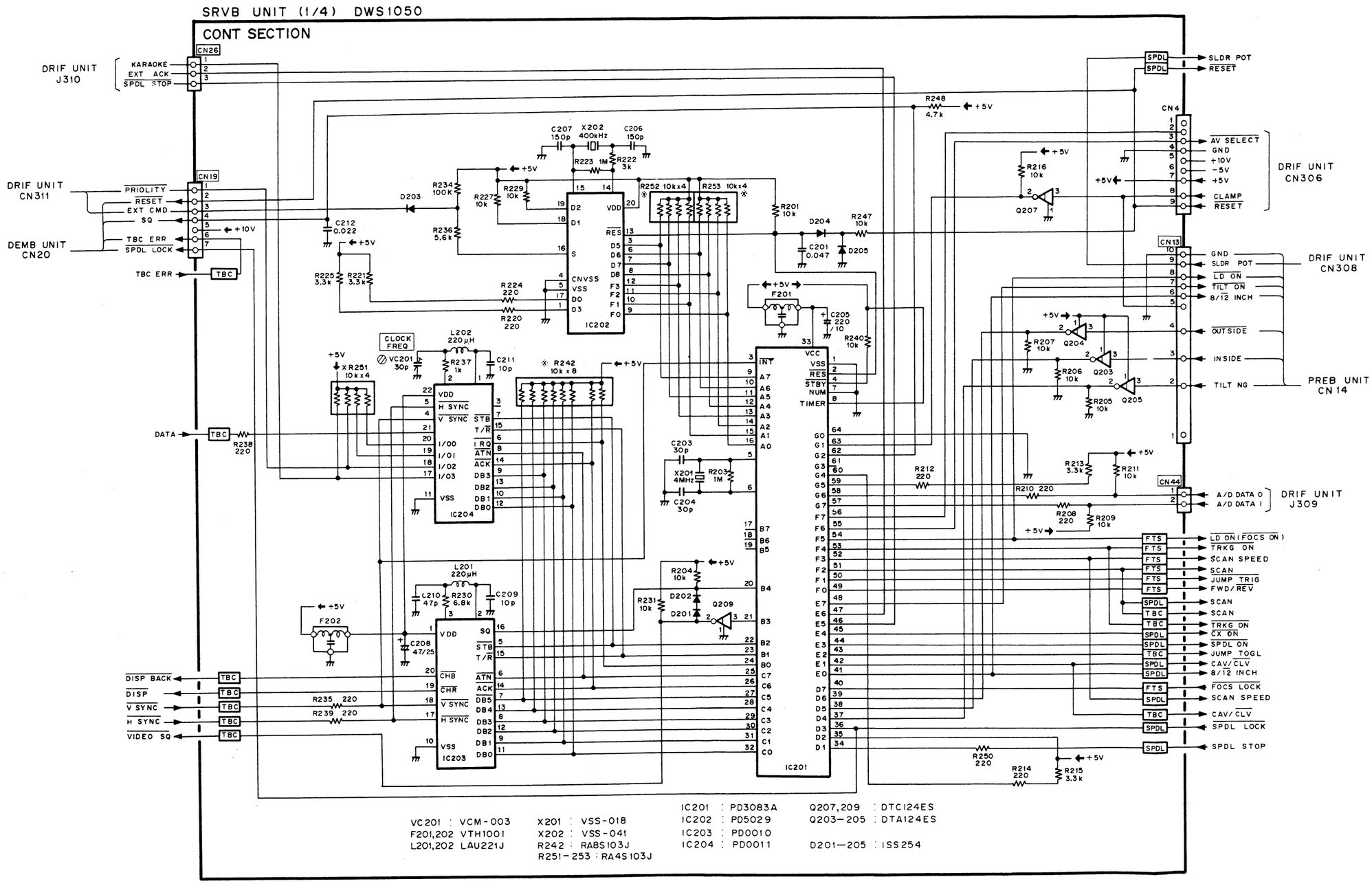

3.3.2.2 TBC SECTION

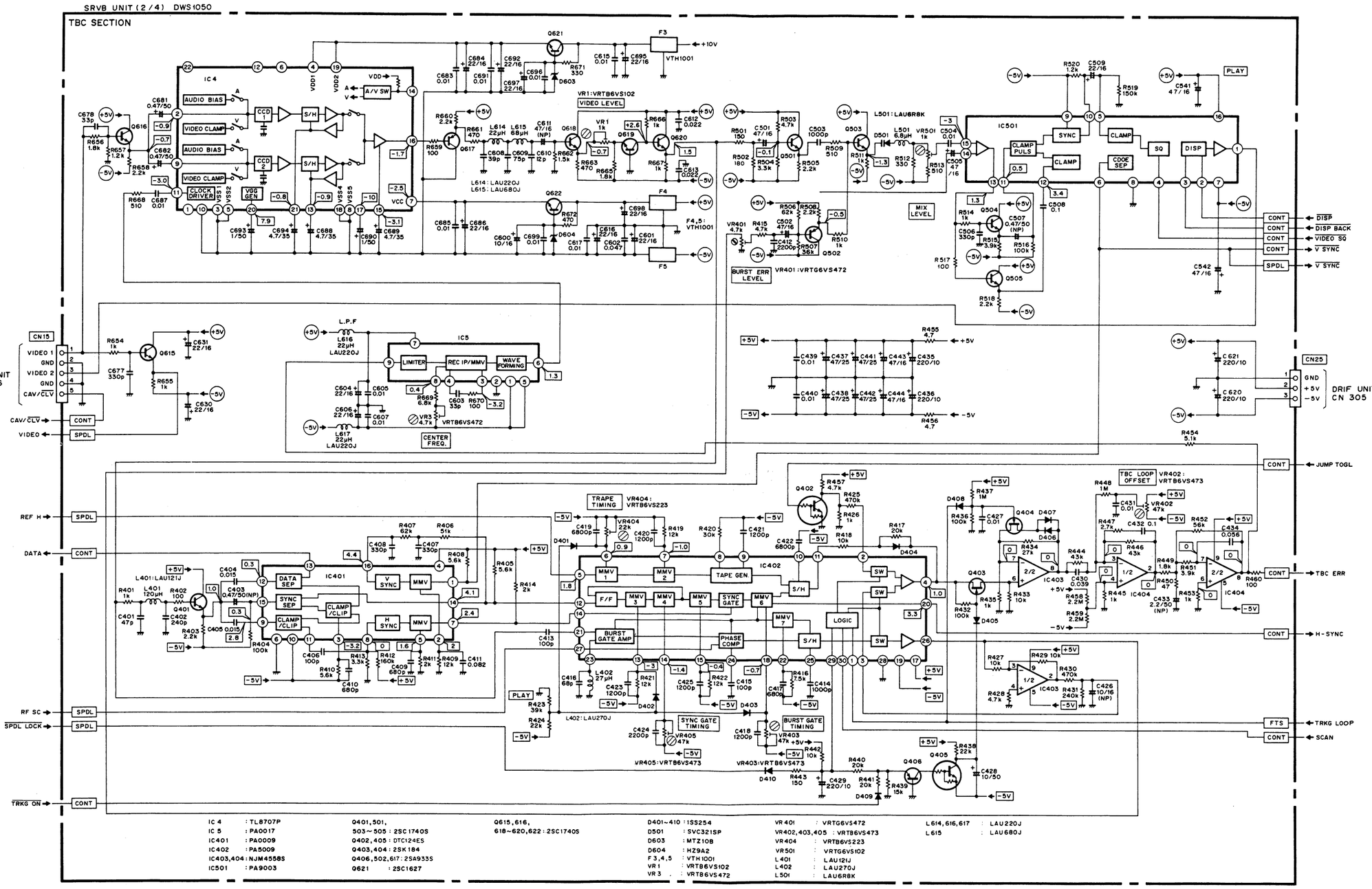

IC 4	: TL8707P	Q401,501, 503~505	: 2SC1740S	Q615,616, 618~620,622	: 2SC1740S	D401~410	: 1SS254
IC 5	: PA0017	Q402,405	: DTC124ES	D501	: SVC321SP	D603	: MTZ10B
IC401	: PA0009	Q403,404	: 2SK184	D604	: HZ9A2	F 3,4,5	: VTH1001
IC402	: PA5009	Q406,502,617	: 2SA933S	VR 1	: VRT86VS102	VR 3	: VRT86VS472
IC403,404	: NJM4558S	Q621	: 2SC1627				
IC501	: PA9003						

VR 401	: VRTG6VS472	L614,616,617	: LAU220J
VR402,403,405	: VRT86VS473	L615	: LAU680J
VR 404	: VRT86VS223		
VR501	: VRTG6VS102		
L 401	: LAU121J		
L 402	: LAU270J		
L501	: LAU6R8K		

3.3.2.3 FTS SECTION

SRVB UNIT (3/4) DWS-1050

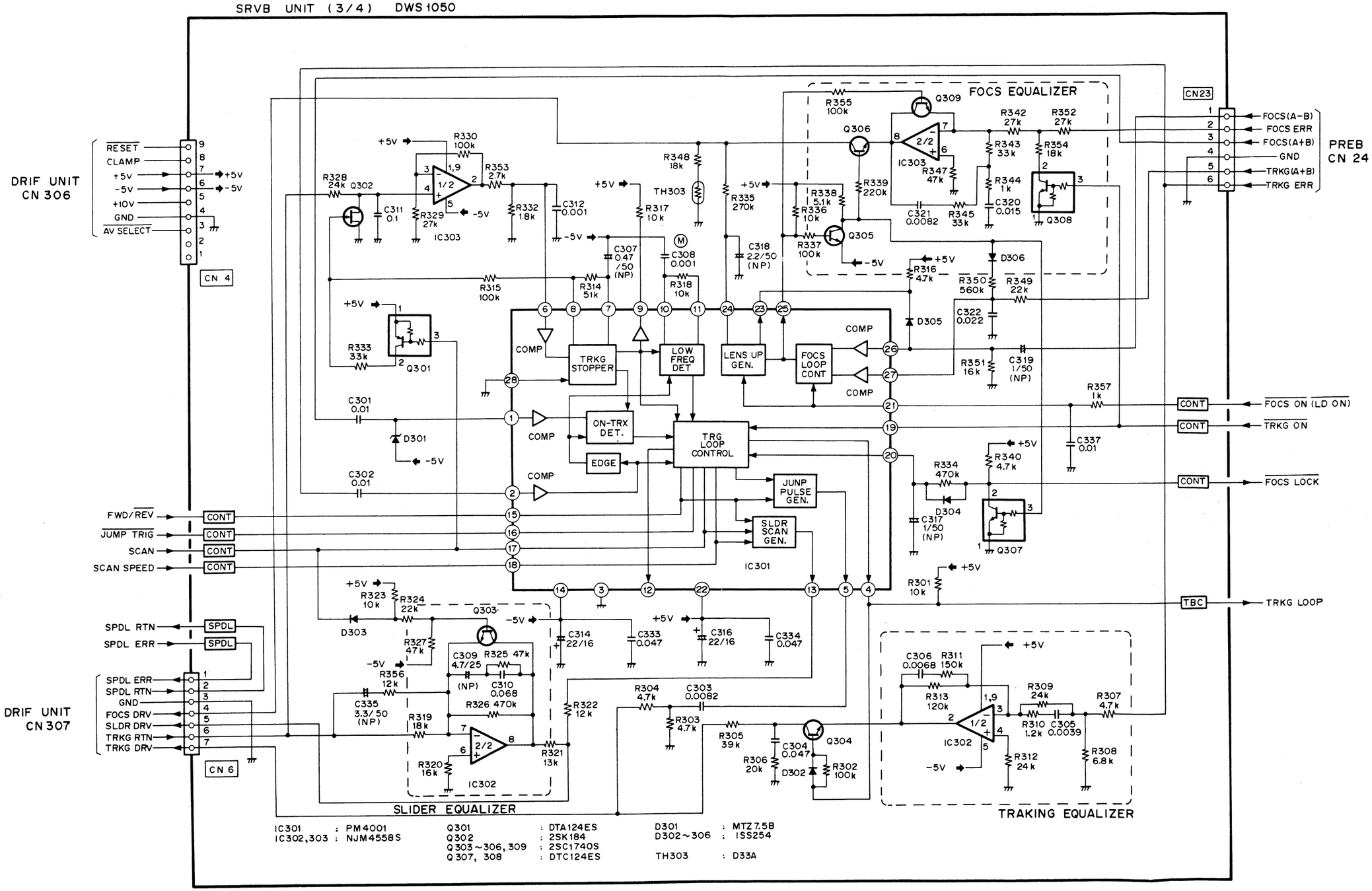

IC301 : PM4001
IC302,303 : NJM4558S

Q301 : DTA124ES
Q302 : 2SK184
Q303~306, 309 : 2SC1740S
Q307, 308 : DTC124ES

D301 : MTZ7.5B
D302~306 : 1SS254

TH303 : D33A

3.3.2.4 SPDL SECTION

SRVB UNIT (4/4) DWS 1050

SPDL SECTION

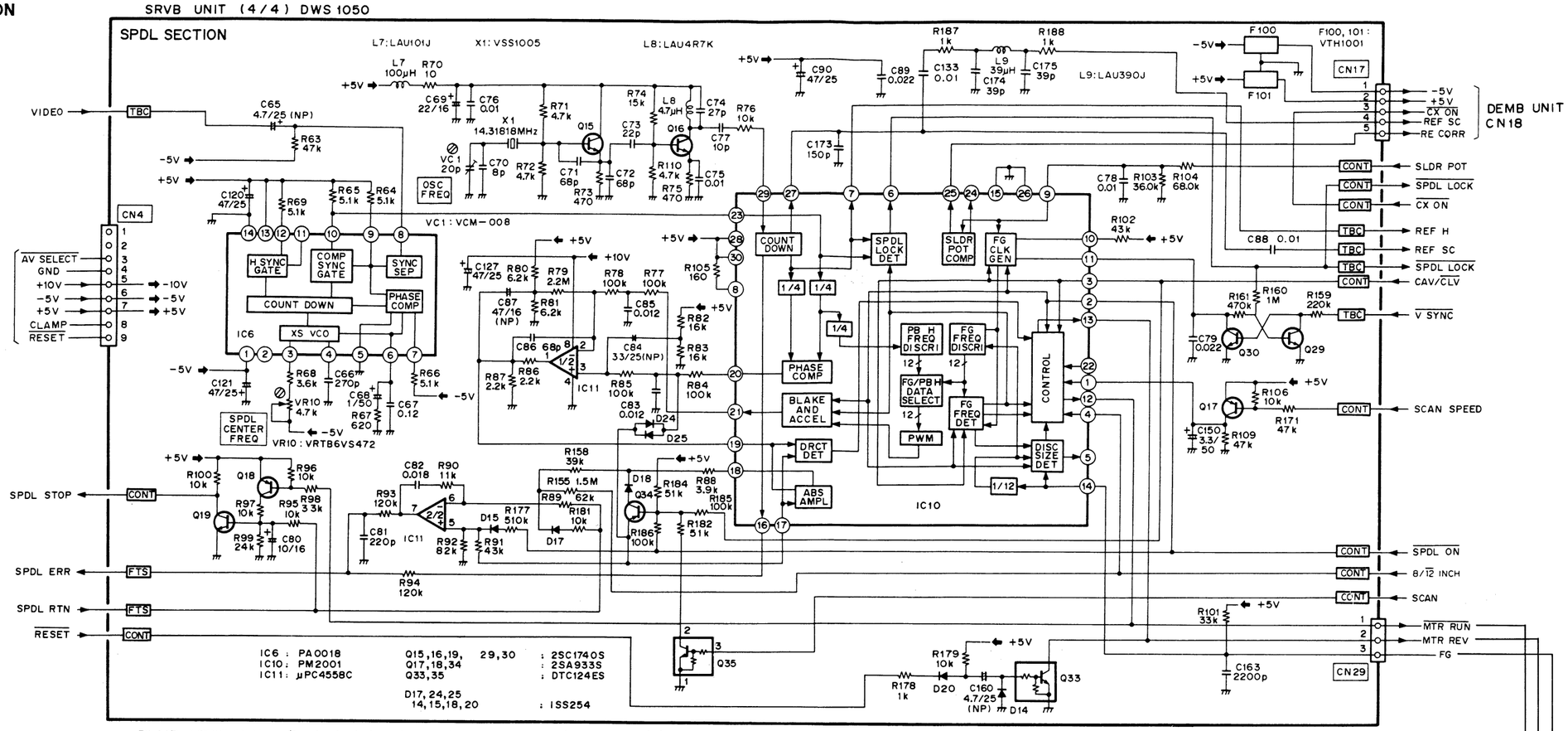

BLMB ASSEMBLY (Included in the spindle motor (DXM1018).)

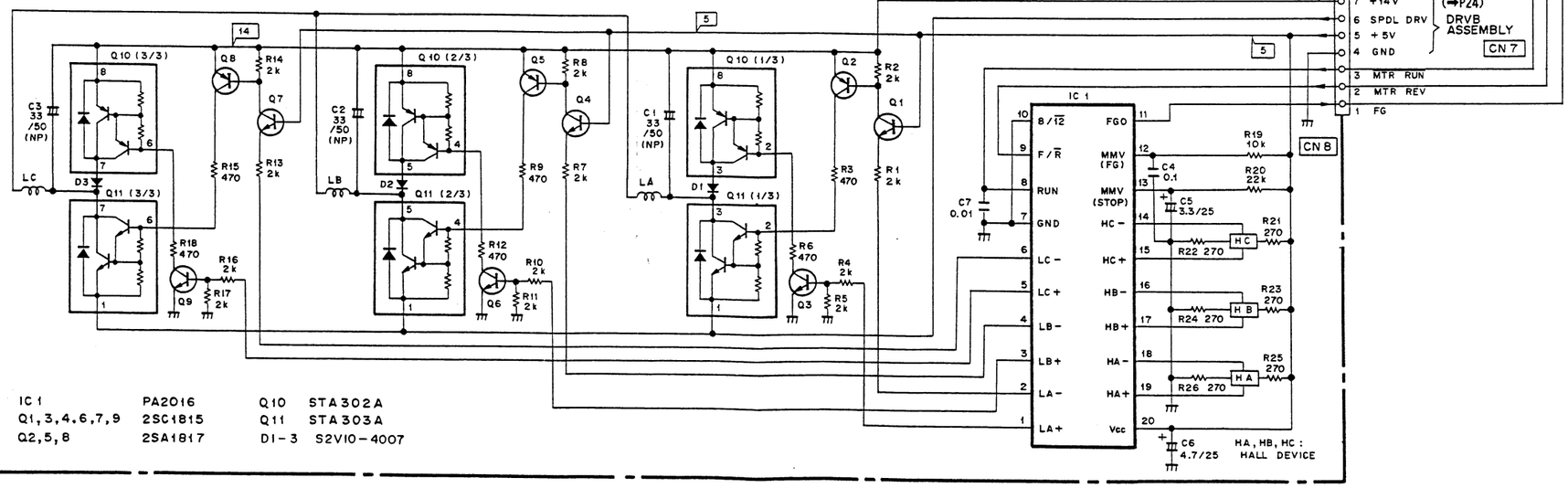

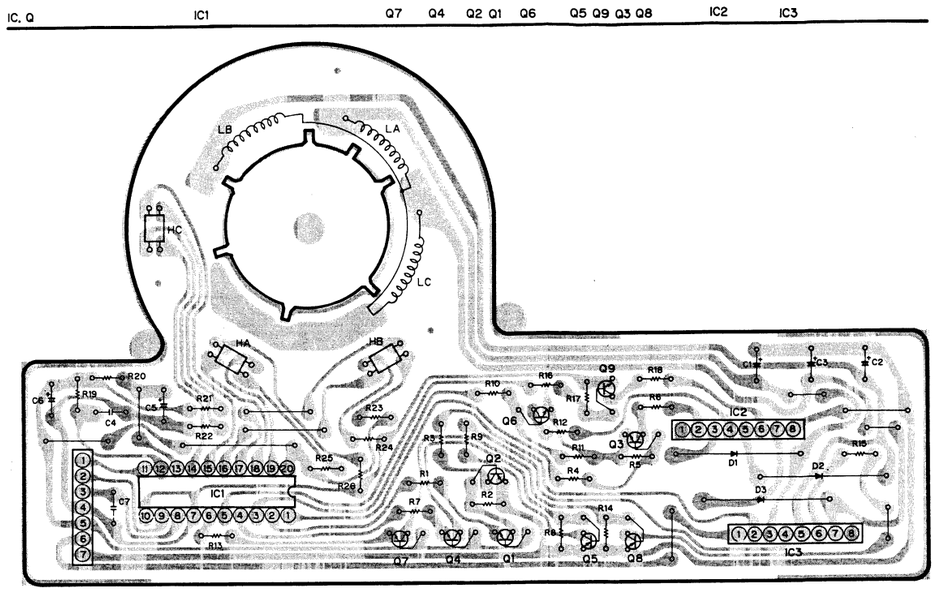

BLMB UNIT

SRVB UNIT (DWS1050)

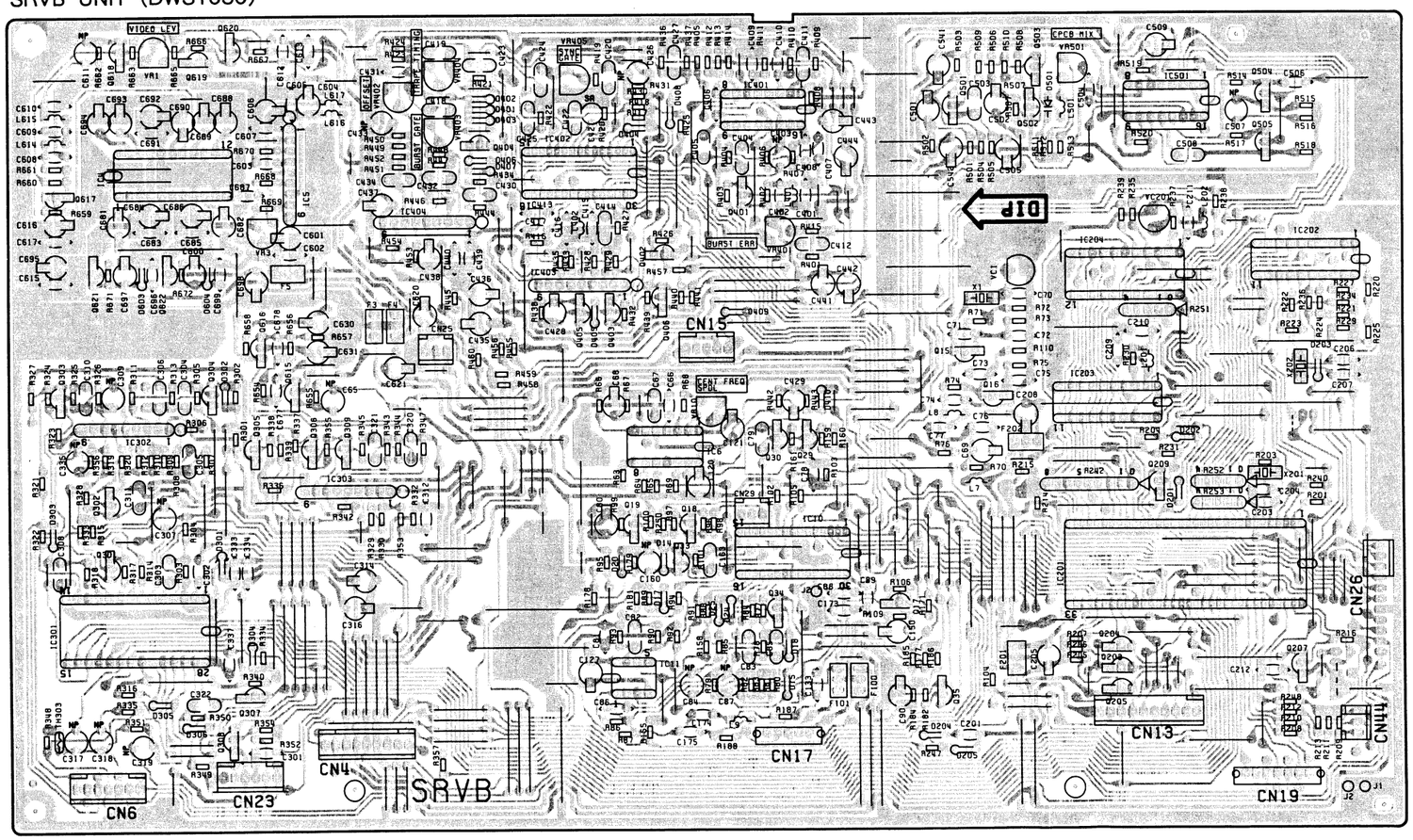

3.3.2.5 DEMB UNIT

DEMB UNIT (DWV1027)

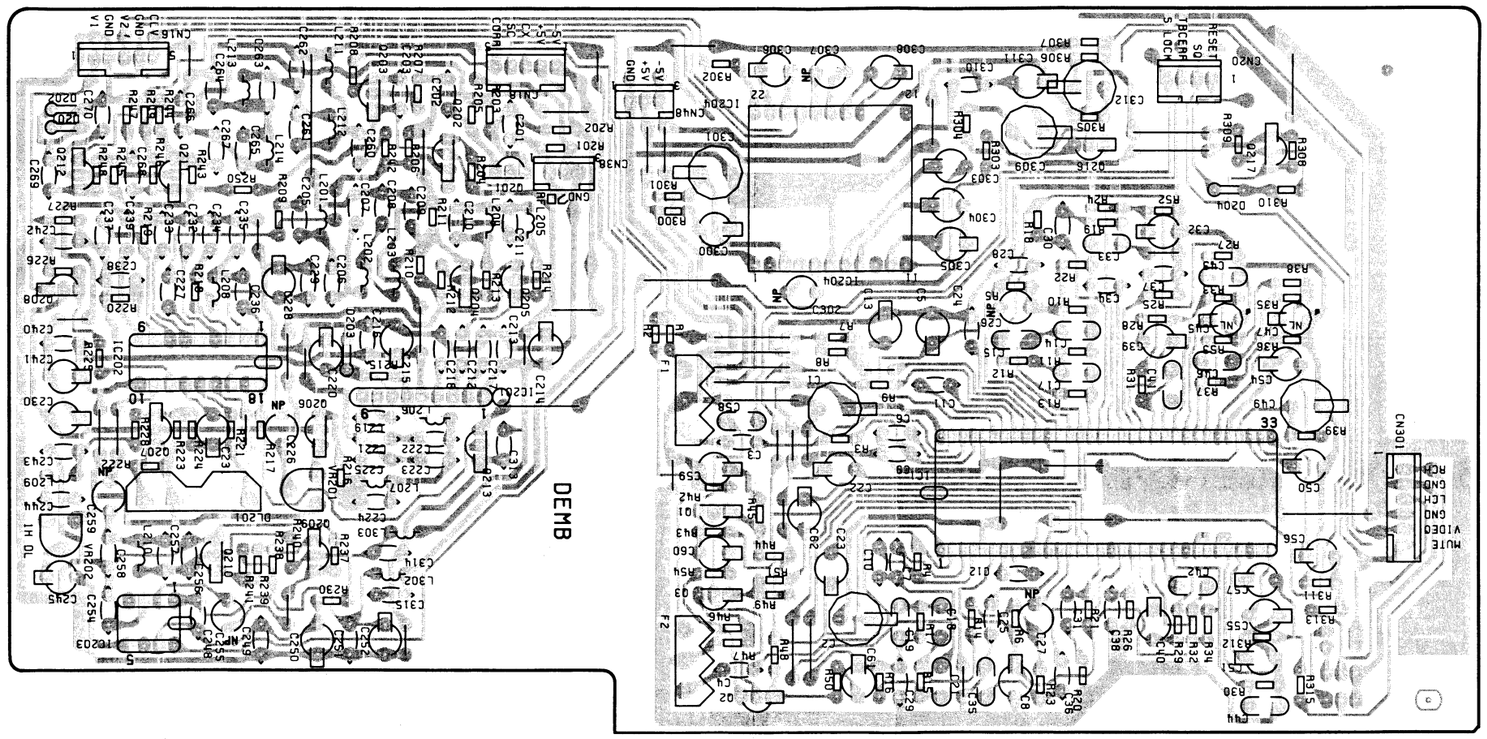

DEMB UNIT (DWV1027)

IC201 : PA0023
IC202 : PA3018
IC203 : PM0001
IC204 : DYY1003
IC 1 : PA0026

Q201 : 2SC1674
Q202,204~212
216,1~3 : 2SC1740S
Q203 : 2SA933S
Q213 : DTC124ES
Q217 : DTA124ES

D201~204 : 1SS254

F1 : VTF1002
F2 : VTF1003

DL201 : VTF-061

R304 : DCN1002
VR201,202 : VRT86VS102

L302,303 : LAU100J
L211 : LAU101J
L202 ~ 205 : LAU180J
L201 : LAU270J
L206 : LAU390J
L207 : LAU430J
L213,214 : LAU470J
L208 : LRA220K
L212 : LRA221K
L209,210 : LRA391K

PREB UNIT CN37 — CN38 (RF, GND, GND)

SRVB UNIT CN17 — CN18 (RF CORR, REF SC, CX ON, +5V, -5V)

SRVB UNIT CN15 — CN16 (CLV, GND, VIDEO2, GND, VIDEO1)

DRIF UNIT CN303 — CN48 (-5V, +5V, GND)

VR201 1k — DEMOD VIDEO LEVEL ADJ

VR202 : 1H DELAY VIDEO LEVEL ADJ

IC204 : VNR

IC202 : LIM, D-MMV, DOS

IC203 : 1/2 CCD 1/2 STAGES

DL201 : 220mS DELAY

IC1 : LIMITER, DELAYED MULTI, ALC, DEMO, DOS1 (L), DOS1 (R), DOS2 (L), DOS2 (R), OR, SAMPL HOLD, FILTER, MODE SELECTOR AMP, CX AMP, F.T.C, S.T.C, FAST T.C, SLOW T.C, COMP, VCA, BI SWITCH, DC CANCEL, MUTE CONTROL, MUTE, MIX

F1 2.3MHz B.P.F — F2 2.8MHz B.P.F

CN20 — SRVB UNIT CN19 (SPDL LOCK, TBC ERR, SQ, RESET)

CN301 — DRIF UNIT J302 (MUTE, VIDEO, GND, LCH, GND, RCH)

3.3.2.6 DRIF UNIT

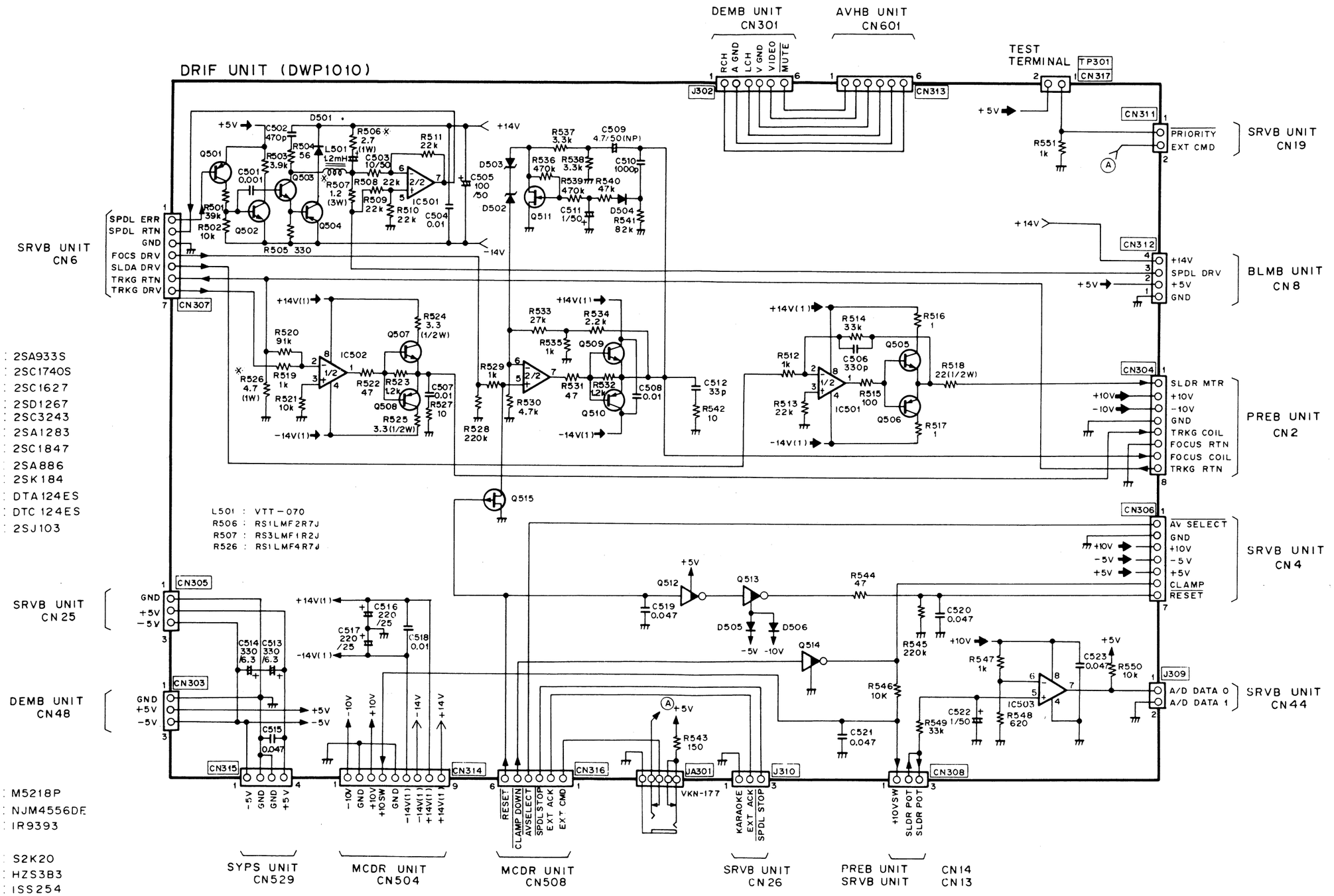

Q501 : 2SA933S
Q502 : 2SC1740S
Q503 : 2SC1627
Q504 : 2SD1267
Q505,507 : 2SC3243
Q506,508 : 2SA1283
Q509 : 2SC1847
Q510 : 2SA886
Q511 : 2SK184
Q512 : DTA124ES
Q513,514 : DTC124ES
Q515 : 2SJ103

L501 : VTT-070
R506 : RS1LMF2R7J
R507 : RS3LMF1R2J
R526 : RS1LMF4R7J

IC501 : M5218P
IC502 : NJM4556DE
IC503 : IR9393

D501 : S2K20
D502, 503 : HZS3B3
D504~506 : ISS254

DRIF UNIT (DWP1010)

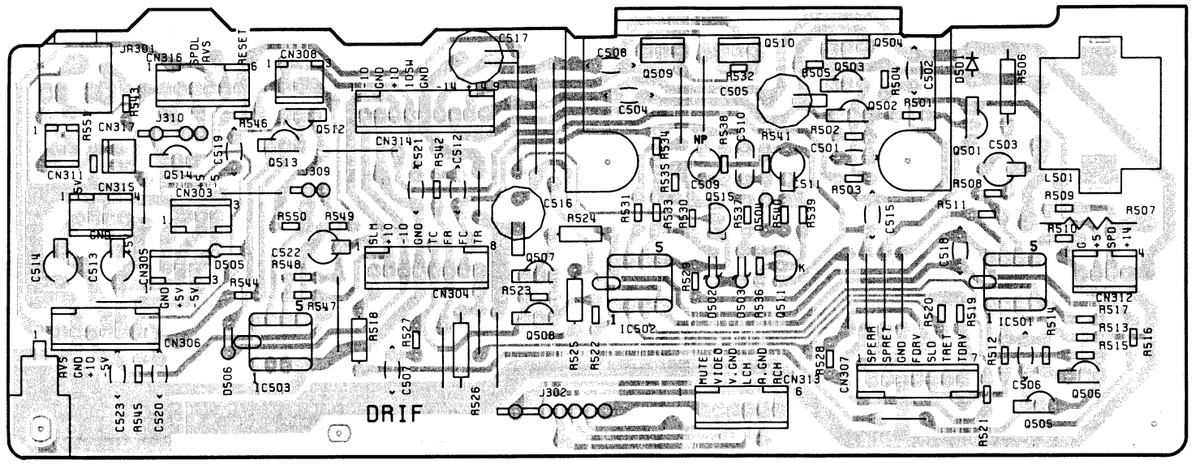

3.3.2.7 MECHANISM ASSEMBLY

PREB UNIT (DWV1009)

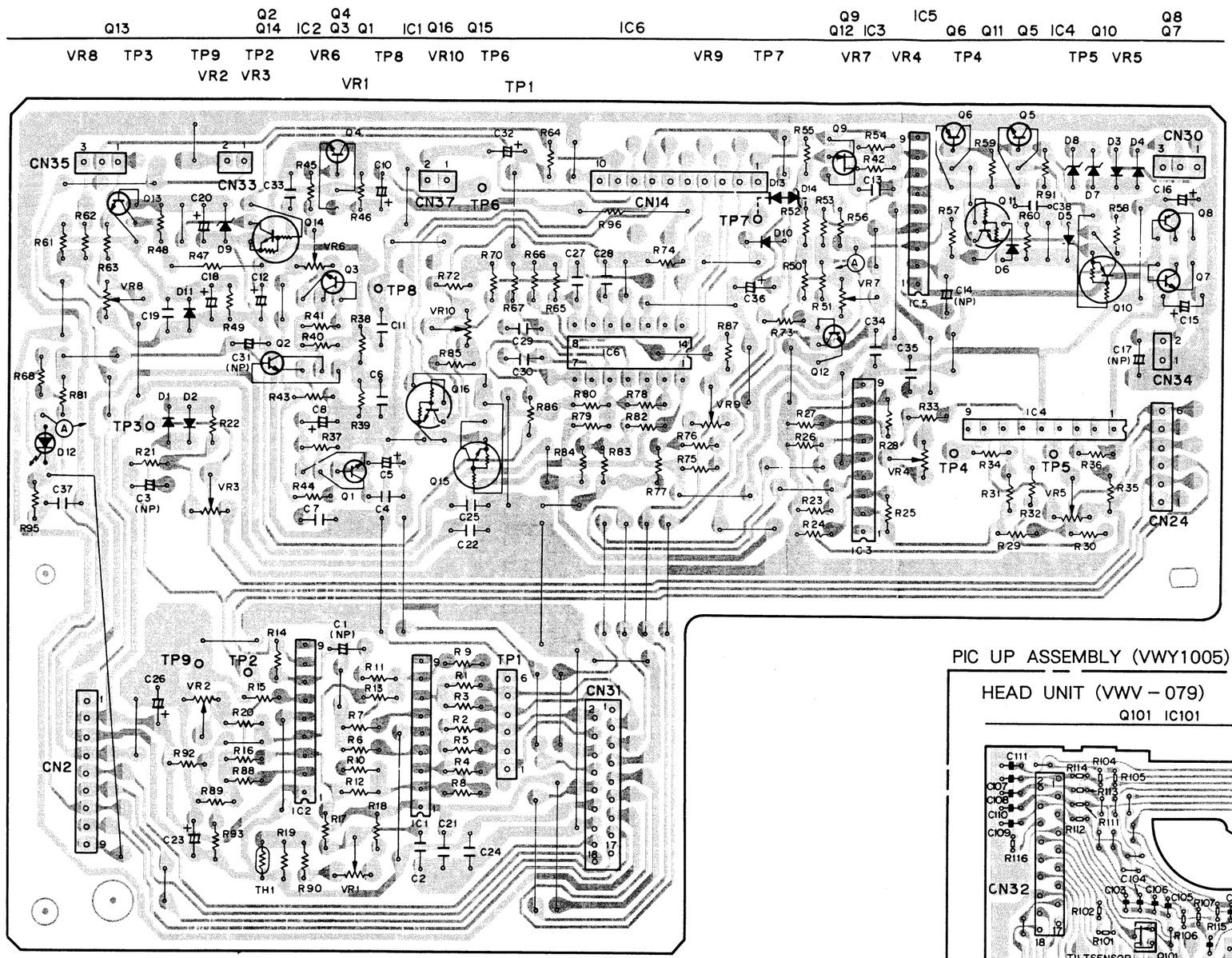

TLMB UNIT

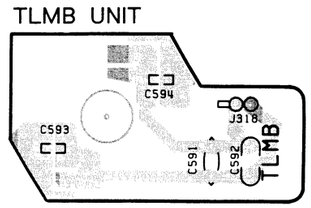

PIC UP ASSEMBLY (VWY1005)

HEAD UNIT (VWV – 079)

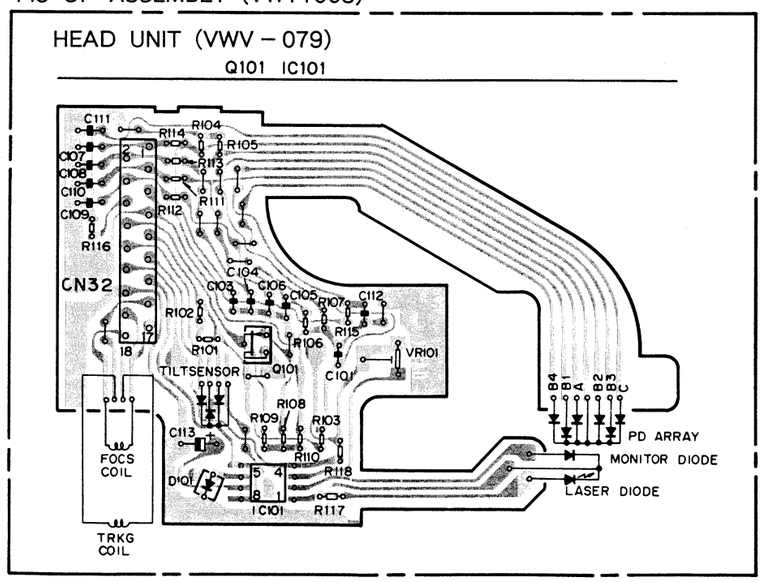

SCHEMATIC DIAGRAM OF MECHANISM SECTION

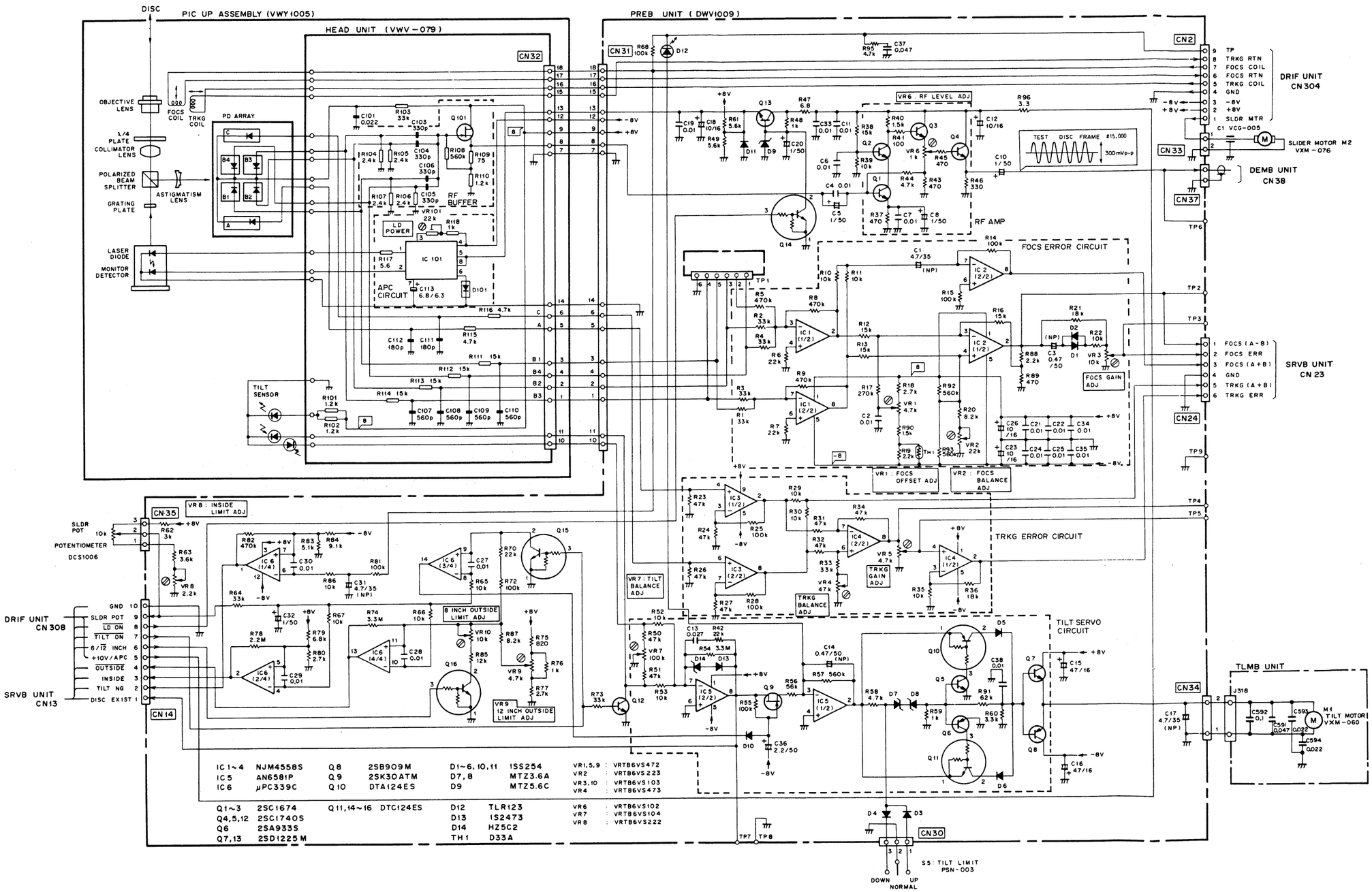

3.4 ELECTRICAL PARTS LIST

NOTES :
- Parts without part number cannot be supplied.
- Parts marked by "◉" are not always kept in stock. Their delivery time may be longer than usual or they may be unavailable.
- The ⚠ mark found on some component parts indicates the importance of the safety factor of the part. Therefore, when replacing, be sure to use parts of identical designation.
- When ordering resistors, first convert resistance values into code form as shown in the following examples.

Ex.1 When there are 2 effective digits (any digit apart from 0), such as 560 ohm and 47k ohm (tolerance is shown by J = 5 %, and K = 10 %).
- 560 Ω → 56 × 10^1 → 561 ····· RD1/4PS 5 6 1 J
- 47k Ω → 47 × 10^3 → 473 ····· RD1/4PS 4 7 3 J
- 0.5 Ω → 0R5 ····· RN2H 0 R 5 K
- 1 Ω → 010 ····· RS1P 0 1 0 K

Ex.2 When there are 3 effective digits (such as in high precision metal film resistors).
- 5.62k Ω → 562 × 10^1 → 5621 ····· RN1/4SR 5 6 2 1 F

- The part number of the semiconductors and the pioneer exclusive use parts are not mentioned. Their are mentioned in the schematic diagrams.

3.4.1 Main body unit

[Laser juke box system control section]

Mark	Symbol & Description	Part No.
◉	SCNT unit KEYB unit WBIB unit LAMP unit	DWG1064

[Video • Audio output terminal section]

Mark	Symbol & Description	Part No.
◉	AVHB unit	DWK1006

[Power supply section]

Mark	Symbol & Description	Part No.
◉	SYPS unit PTRB unit ACIN unit PWSB unit VSSB unit	DWR1028

[Changer control section]

Mark	Symbol & Description	Part No.
◉	MCDR unit CLSB unit DSTB unit	DWG1053

[VH base section (Except armful assembly (DXX1135))]

Mark	Symbol & Description	Part No.
	VCMD unit VSNB unit	

[Armful assembly section (DXX1135)]

Mark	Symbol & Description	Part No.
	HCNC unit HSNB unit REVS unit CHUK unit	

[Vertical motor control section]

Mark	Symbol & Description	Part No.
◉	VMDR unit ENCB unit	DWP1011

3.4.2 Laser juke box system control section

◉SCNT unit (DWG1064)

CAPACITORS

Mark	Symbol & Description	Part No.
	C35,C40 (100p × 8)	DCG-106
	C5,C6	CCCCH180J50
	C3	CCCCH270J50
	C1,C2	CCCSL330J50
	C7	CEANP010M50
	C13,C14,C17	CEAS221M25
	C16	CEAS102M16
	C15	CEAS331M16
	C12	CEAS332M6R3
	C8 – C10	CEAS470M25
	C11,C31	CKCYB102K50
	C18,C21 – C30,C32 – C34,C37,C45	CKCYF473Z50
	C36,C38,C39,C41 – C44	CKCYB331K50
	C19,C20,C46 (1000p × 8)	DCG-105

RESISTORS

Mark	Symbol & Description	Part No.
	R1 – R3 Resistor array (10k × 8)	DCN1009
	R4 – R6 Resistor array (4.7k × 8)	RA8S472J
	Other resistors	RD1/6PM□□□J

KEYB unit

CAPACITORS

Mark	Symbol & Description	Part No.
	C201 – C203	CKPUYF223Z25

WBIB unit

CAPACITORS

Mark	Symbol & Description	Part No.
	C304 (1000p × 6)	DCG-107
	C301 – C303 (0.01)	RDG-008

LAMP unit

Electrical parts are not supplied in this unit.

3.4.3 Video • Audio output terminal section

◉AVHB unit (DWK1006)

CAPACITORS

Mark	Symbol & Description	Part No.
	C10,C11	CEANP100M16
	C20,C21	CEAS101M10
	C6,C7,C15,C16	CEAS331M16
	C5	CEAS470M25
	C13,C14	CEAS471M10
	C3,C4	CFTXA474J50
	C9	CKCYB102K50
	C1,C2,C8,C12,C17 – C19,C22	CKCYF103Z50

RESISTORS

Mark	Symbol & Description	Part No.
	VR1 – VR3 Semi-fixed (100k)	DCS-117
	R28,R29	RD1/2PM561J
	R30,R31 (10)	DCN1002
	Other resistors	RD1/6PM□□□J

3.4.4 Power supply section

◉SYPS unit (DWR1028)

CAPACITORS

Mark	Symbol & Description	Part No.
	C213 – C216	CEAS2R2M50
	C209	CEAS332M25
	C206,C207	CEAS472M16
	C201 – C204	CKCYF473Z50
	C208	CEAS222M25
	C205	CEAS682M16
	C210,C211 (3300/35)	DCH1001
	C212 (6800/35)	DCH1003

RESISTORS

Mark	Symbol & Description	Part No.
	R206,R207	RS1LF391J
	R208 – R212	RS2LF□□□J
	R201,R202	RD1/4PM□□□J

PTRB unit

The part number of the service parts are mentioned to the schematic diagram.

ACIN unit

CAPACITORS

Mark	Symbol & Description	Part No.
⚠	C101 – C104 (0.01)	VCG-048

PWSB unit

CAPACITORS

Mark	Symbol & Description	Part No.
⚠	C110,C111 (0.01)	VCG-048

VSSB unit

The part number of the service parts are mentioned to the schematic diagram.

3.4.5 Changer control section

◉MCDR unit (DWG1053)

CAPACITORS

Mark	Symbol & Description	Part No.
	C9,C10	CCCSL300J50
	C3	CEAS101M50
	C6	CEAS102M25
	C5	CEAS220M50
	C2	CEAS221M25
	C4	CEAS331M6R3
	C14	CFTXA224J50
	C11,C12,C15 – C21	CGCYX473M25
	C13	CKCYB102K50
	C7,C8	CKCYF103Z50

RESISTORS

Mark	Symbol & Description	Part No.
	R1 – R3 (10k)	DCN1009
	R4,R5	RS2LMFR47J
	Other resistors	RD1/6PM□□□J

CLSB unit

The part number of the service parts are mentioned to the schematic diagram.

DTSB unit

The part number of the service parts are mentioned to the schematic diagram.

3.4.6 VH base section (Except armful assembly (DXX1135))

VCMD unit

CAPACITORS

Mark	Symbol & Description	Part No.
	C1	CEAS221M25
	C2,C3	CEAS331M6R3

RESISTORS

Mark	Symbol & Description	Part No.
	R1,R2	RD1/2PMF3R3J
	R3	RD1/4PM471J

VSNB unit

CAPACITORS

Mark	Symbol & Description	Part No.
	C12	CEAL101M6R3
	C11	CKCYF103Z50

RESISTORS

Mark	Symbol & Description	Part No.
	R11 – R14	RD1/4PM□□□J

3.4.7 Armful assembly section (DXX1135)

HCNC unit

Electrical parts are not supplied in this unit.

HSNB unit

CAPACITOR

Mark	Symbol & Description	Part No.
	C21	CKCYF103Z50

RESISTORS

Mark	Symbol & Description	Part No.
	R21,R22	RD1/4PM□□□J

REVS unit

RESISTOR

Mark	Symbol & Description	Part No.
	R41	RD1/4PM151J

CHUK unit

RESISTOR

Mark	Symbol & Description	Part No.
	R31	RD1/4PM151J

3.4.8 Vertical motor control section

◉VMDR unit (DWP1011)

CAPACITORS

Mark	Symbol & Description	Part No.
	C1	CCCSL151J50
	C7	CEANPR47M50
	C6,C11	CEANP010M50
	C43,C44	CEAS101M50
	C25,C26	CEAS102M16
	C27,C28,C33,C36	CEAS331M16
	C24	CKCYB102K50
	C5,C20 – C23	CKCYF103Z50
	C29 – C32,C34,C35,C37 – C42	CKCYF473Z50
	C45,C46	CQMA104J50
	C12 – C15	CQMA152J50
	C8,C9	CQMA223J50
	C10	CQMA272J50
	C4	CQMA393J50
	C2	CQMA682J50
	C3	CQMA823J50

RESISTORS

Mark	Symbol & Description	Part No.
	VR1 Semi-fixed (10kΩ)	VRTB6VS103
	R82 – R85,R108,C109	RD1/2PMF100J
	R32 – R35,R87,R88,R98 – R101	RD1/2PM□□□J
	R17 – R24,R53 – R55,R107	RN1/4PQ□□□□F
	R95 – R97	RS2LFR68J
	Other resistors	RD1/4PM□□□J

ENCB unit

CAPACITOR

Mark	Symbol & Description	Part No.
	C250	CKCYF103Z50

RESISTOR

Mark	Symbol & Description	Part No.
	R250	RD1/4PM221J

3.4.9 LDP assembly (DXX1170)

Mark	Symbol & Description	Part No.
◉	SRVB unit	DWS1050
	BLMB unit	
◉	DEMB unit	DWV1027
◉	DRIF unit	DWP1010
	PREB unit	DWV1009
	TLMB unit	
	HEAD unit	

◉SRVB unit (DWS1050)

CAPACITORS

Mark	Symbol & Description	Part No.
	C70	CCCCH080D50
	C77,C209,C211	CCCCH100D50
	C610	CCCCH120J50
	C73	CCCCH220J50
	C74	CCCCH270J50
	C603,C678	CCCCH330J50
	C174,C175,C608	CCCCH390J50
	C401	CCCCH470J50
	C71,C72,C86,C416	CCCCH680J50
	C406,C413,C415	CCCSL101J50
	C173,C206,C207	CCCSL151J50
	C81	CCCSL221J50
	C402	CCCSL241J50
	C66	CCCSL271J50
	C203,C204	CCCSL300J50
	C407,C408,C506,C677	CCCSL331J50
	C210	CCCSL470J50
	C609	CCCSL750J50
	C317,C319	CEANP010M50
	C426	CEANP100M16
	C318,C433	CEANP2R2M50
	C84	CEANP330M25
	C65,C160,C309	CEANP4R7M25
	C87,C611	CEANP470M16
	C205,C429,C435,C436,C620,C621	CEAS221M10
	C90,C120,C121,C127,C208,C437, C438,C441,C442	CEAS470M25
	C307,C403,C507	CEJANPR47M50
	C335	CEJANP3R3M50
	C681,C682	CEJAR47M50
	C68,C690,C693	CEJA010M50
	C80,C428,C600	CEJA100M16
	C69,C314,C316,C509,C601,C604, C606,C616,C630,C631,C684,C686, C692,C695,C697,C698	CEJA220M16
	C150	CEJA3R3M50
	C688,C689,C694	CEJA4R7M35
	C443,C444,C501,C502,C505,C541, C542	CEJA470M16
	C311,C432,C508	CFTXA104J50
	C67	CFTXA124J50
	C434	CFTXA563J50
	C310	CFTXA683J50
	C411	CFTXA823J50
	C201,C333,C334,C602	CGCYX473M25
	C312	CKCYB102K50
	C409,C410,C417	CKCYB681K50
	C75,C76,C78,C88,C133,C301, C302,C337,C431,C439,C440,C504, C605,C607,C615,C617,C683,C685, C687,C691,C696,C699	CKCYF103Z50
	C89,C212,C612,C613	CKCYF223Z50
	C308,C414,C503	CQMA102J50
	C427	CQMA103J50
	C418,C420,C423,C425	CQMA122J50
	C83,C85	CQMA123J50
	C320,C404,C405	CQMA153J50
	C82	CQMA183J50
	C163,C412,C424	CQMA222J50
	C79,C322	CQMA223J50
	C305	CQMA392J50
	C430	CQMA393J50
	C304	CQMA473J50
	C306,C419,C422	CQMA682J50
	C303,C321	CQMA822J50
	C421	CQPA122J100

RESISTORS

Mark	Symbol & Description	Part No.
	VR1 Semi-fixed (1kΩ)	VRTB6VS102
	VR404 Semi-fixed (22kΩ)	VRTB6VS223
	VR3,VR10 Semi-fixed (4.7kΩ)	VRTB6VS472
	VR402,VR403,VR405 Semi-fixed (47k Ω)	VRTB6VS473
	VR501 Semi-fixed (1kΩ)	VRTG6VS102
	VR401 Semi-fixed (4.7kΩ)	VRTG6VS472
	R251 – R253 Resistor array	RA4S103J
	R242 Resistor array	RA8S103J
	R103,R104	RN1/6PQ□□□□F
	Other resistors	RD1/6PM□□□J

BLMB unit

The part number of the service parts are mentioned to the schematic diagram.

◉DEMB unit (DWV1027)

CAPACITORS

Mark	Symbol & Description	Part No.
	C207,C209,C221,C222,C234,C265	CCCCH080D50
	C224,C235	CCCCH150J50
	C225,C257,C263	CCCCH180J50
	C208,C256,C262,C266	CCCCH220J50
	C238	CCCCH221J50

Mark	Symbol & Description	Part No.
	C12,C223	CCCCH330J50
	C11,C237	CCCCH390J50
	C34,C36,C205,C206,C264	CCCCH560J50
	C219	CCCCH680J50
	C258	CCCSL121J50
	C202	CCCSL151J50
	C25,C210,C242 – C244	CCCSL181J50
	C24,C37,C38	CCCSL221J50
	C260,C261	CCCSL241J50
	C211	CCCSL271J50
	C227	CCCSL330J50
	C45	CEANLR47K50
	C47	CEANL220K16
	C302,C307	CEANP100M16
	C226,C259	CEANP4R7M25
	C32,C40,C54,C60 – C62	CEAS100M50
	C22,C23,C59,C303,C306,C308, C311	CEAS101M10
	C50,C51,C56,C57,C231	CEAS220M50
	C5,C8	CEAS221M10
	C245	CEAS3R3M50
	C13	CEAS4R7M50
	C55,C214,C215,C220,C241,C252, C300,C304,C305	CEAS470M25
	C1,C2,C49,C301,C309,C312	CEAS471M10
	C26,C27	CEJANP220M10
	C255	CEJANP3R3M25
	C39,C230	CEJA100M16
	C228,C250	CEJA470M16
	C46,C58	CFTXA104J50
	C28,C29,C232,C233	CKCYB102K50
	C30,C31	CKCYB472K50
	C201,C203,C212,C213, C216 – C218,C229,C236,C239, C240,C249,C251,C254, C267 – C270,C310,C313 – C315	CKCYF103Z50
	C3,C4,C6,C7,C9,C10,C248	CKCYF223Z50
	C14,C15,C18,C19	CQMA112J50
	C33,C35	CQMA152J50
	C17,C21	CQMA222J50
	C41,C42	CQMA393J50
	C43,C44	CQMA822J50

RESISTORS

Mark	Symbol & Description	Part No.
	VR201,VR202 Semi-fixed (1kΩ)	VRTB6VS102
	R304 (10)	DCN1002
	R33,R34,R38,R53	RD1/4VM□□□J
	Other resistors	RD1/6PM□□□J

◉DRIF unit (DWP1010)

CAPACITORS

Mark	Symbol & Description	Part No.
	C512	CCCSL330J50
	C509	CEANP4R7M50
	C511,C522	CEAS010M50
	C503	CEAS100M50
	C505	CEAS101M50
	C516,C517	CEAS221M25
	C513,C514	CEAS331M6R3
	C515,C519 – C521,C523	CGCYX473M25
	C501	CKCYB102K50
	C506	CKCYB331K50
	C502	CKCYB471K50
	C504,C507,C508,C518	CKCYF103Z50
	C510	CQMA102J50

RESISTORS

Mark	Symbol & Description	Part No.
	R524,C525	RD1/2LF3R3J
	R518	RD1/2PMF220J
	R508 – R511	RN1/6PQ2202F
	R506,R526	RS1LMF□□□J
	R507	RS3LMF1R2J
	Other resistors	RD1/6PM□□□J

3.4.10 Mechanism assembly

PREB unit (DWV1009)

CAPACITORS

Mark	Symbol & Description	Part No.
	C5,C8,C10,C20,C32	CEAL010M50
	C12,C18,C23,C26	CEAL100M16
	C36	CEAL2R2M50
	C15,C16	CEAL470M50
	C3,C14	CEANPR47M50
	C1,C17,C31	CEANP4R7M35
	C37	CGDYX473M25
	C2,C4,C6,C7,C11,C19,C21,C22, C24,C25,C27 – C30,C33 – C35, C38	CKDYF103Z50
	C13	CQMA273J50

RESISTORS

Mark	Symbol & Description	Part No.
	VR6 Semi-fixed (1kΩ)	VRTB6VS102
	VR3,VR10 Semi-fixed (10kΩ)	VRTB6VS103
	VR7 Semi-fixed (100kΩ)	VRTB6VS104
	VR8 Semi-fixed (2.2kΩ)	VRTB6VS222
	VR2 Semi-fixed (22kΩ)	VRTB6VS223
	VR1,VR5,VR9 Semi-fixed (4.7kΩ)	VRTB6VS472
	VR4 Semi-fixed (47kΩ)	VRTB6VS473
	R47,R96	RD1/4PM□□□J
	R79,R80	RN1/6PQ□□□□F
	Other resistors	RD1/6PM□□□J

TLMB unit

CAPACITORS

Mark	Symbol & Description	Part No.
	C592	CFTXA104J50
	C591	CGCYX473M25
	C593,C594	CKPUYF223Z25

3.4.11 PICK-UP Assembly (VWY1005)

HEAD unit

CAPACITORS

Mark	Symbol & Description	Part No.
	C111,C112	CCSQCH181J50
	C103 - C106	CCSQCH331J50
	C107 - C110	CCSQSL561J50
	C101	CKSQYF223Z50
	C113	VCH-025

RESISTORS

Mark	Symbol & Description	Part No.
	VR101 (22k)	VCP-141
	Other resistors	RS1/10S□□□J

3.5 ADJUSTMENT

- Be sure to turn off the power before starting adjustment which requires no power supply. Otherwise, a serious overrun may occur in the internal mechanism.
- If the adjustment requires power supply, make adjutment in the manual mode. To enter the manual mode, keep the door open, and while pressing down S101 and S102 in the MCDR unit (DWG1053), turn on the power. (If S101 and S102 are kept pressed for more than 10 seconds after the power is turned on, the equipment enters another mode.) In the manual mode, each of the changer mechanisms can be operated independently. (Refer to page 135 for details.)

3.5.1 Adjustment of the space between the reverse gear A and the reverse base assembly

Adjust the space between the reverse gear A and the slider washer so that it is 0.1 $^{+0.1}_{-0.05}$ mm to obtain a suitable clearance for the backlash of the reverse gear A and B in the direction of thrust.

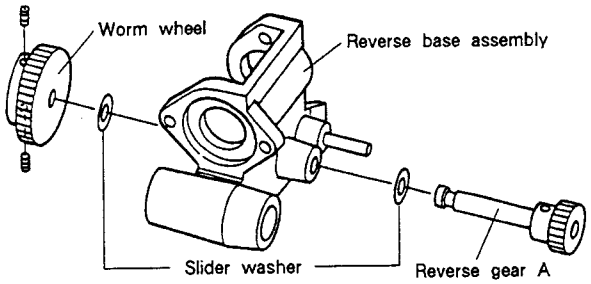

Fig. 3-5-1

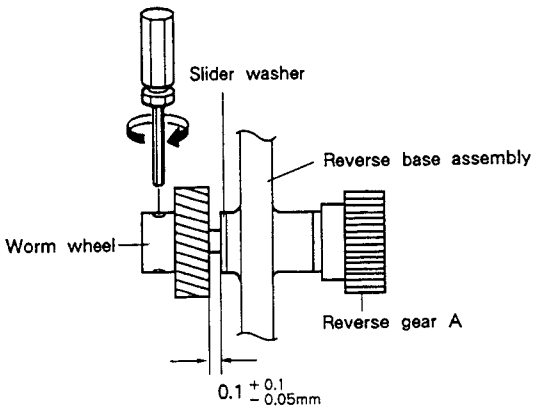

Fig. 3-5-2

3.5.2 Adjustment of the space between the chuck gear B and the arm base A

Adjust the space between the chuck gear B and the slider washer so that it is 0.1 $^{+0.1}_{-0.05}$ mm to obtain a suitable clearance for the backlash of the chuck gear B in the direction of thrust.

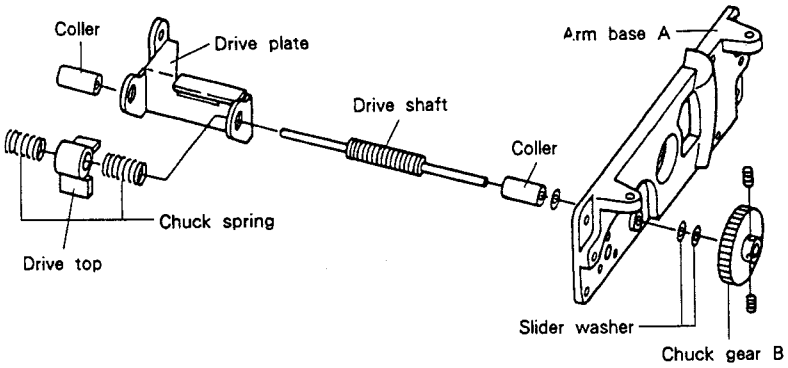

Fig. 3-5-3

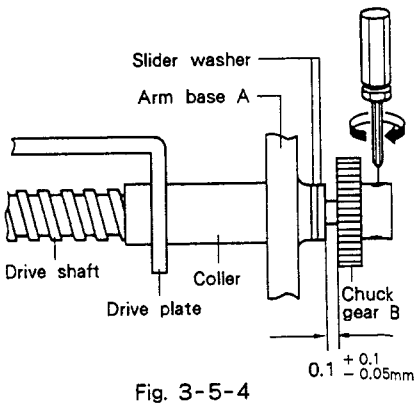

Fig. 3-5-4

3.5.3 Adjustment of the space between the chuck gear A and the arm base A

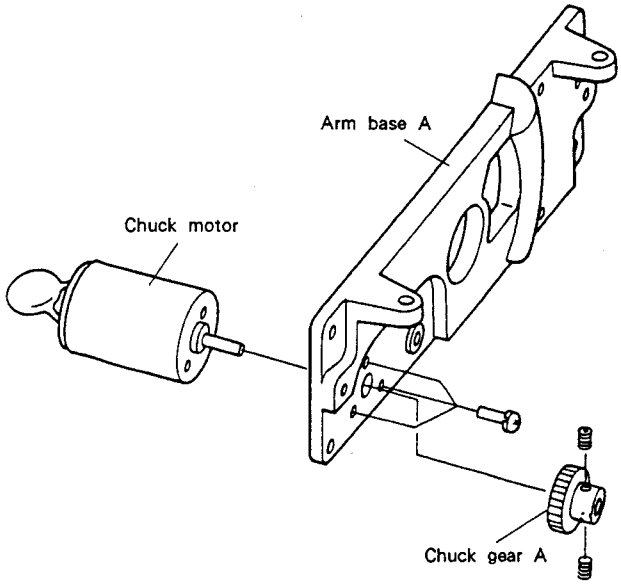

Fig. 3-5-5

Adjust the space between the chuck gear A and the arm base A so that it is 0.7 ± 0.2mm to obtain a suitable clearance for the chuck gear A.

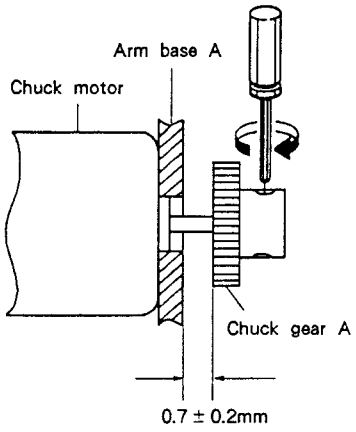

Fig. 3-5-6

3.5.4 Adjustment of the space between the horizontal drive worm gear and the pulley E

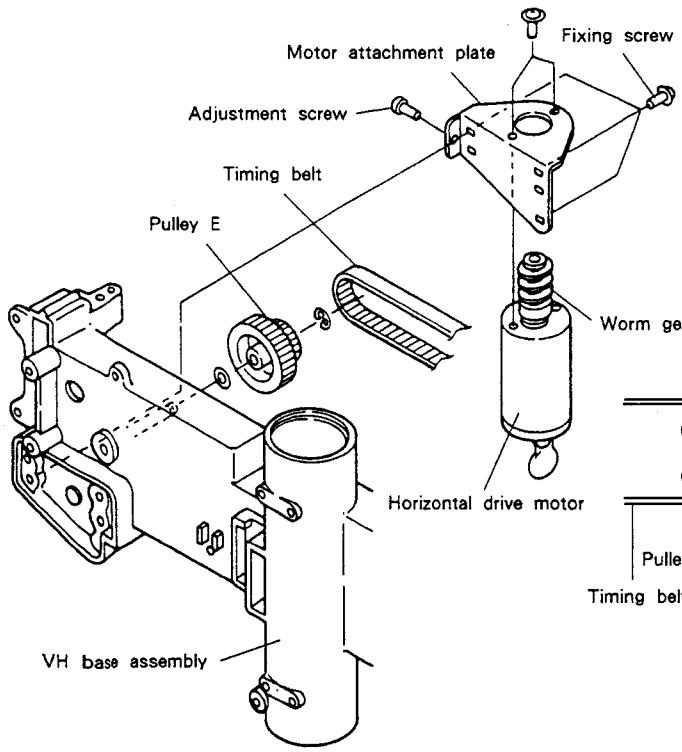

Fig. 3-5-7

Adjust the space to obtain a suitable backlach of the horizontal drive worm gear.

①Loosen the fixing screw of the motor attachment plate.

②Adjust the adjustment screw so that there is a slight contact between the worm gear of the motor and the worm wheel of the pulley E.

③Turn the adjustment screw approximately 180 degrees so that a clearance of 0.1 to 0.25 mm is obtained.

④Tighten the fixing screw.

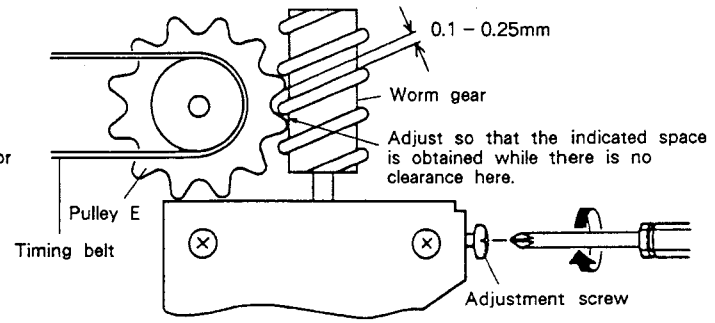

Fig. 3-5-8

3.5.5 Adjustment of the horizontal position of the arm and the reverse stop position

Adjust them so that a disc can be set at the level position in the LDP assembly and the disc rack. When the horizontal position of the arm is adjusted correctly, the reverse stop position may become incorrect, or vice versa. When one of them has been adjusted, make sure that the other remains correct.

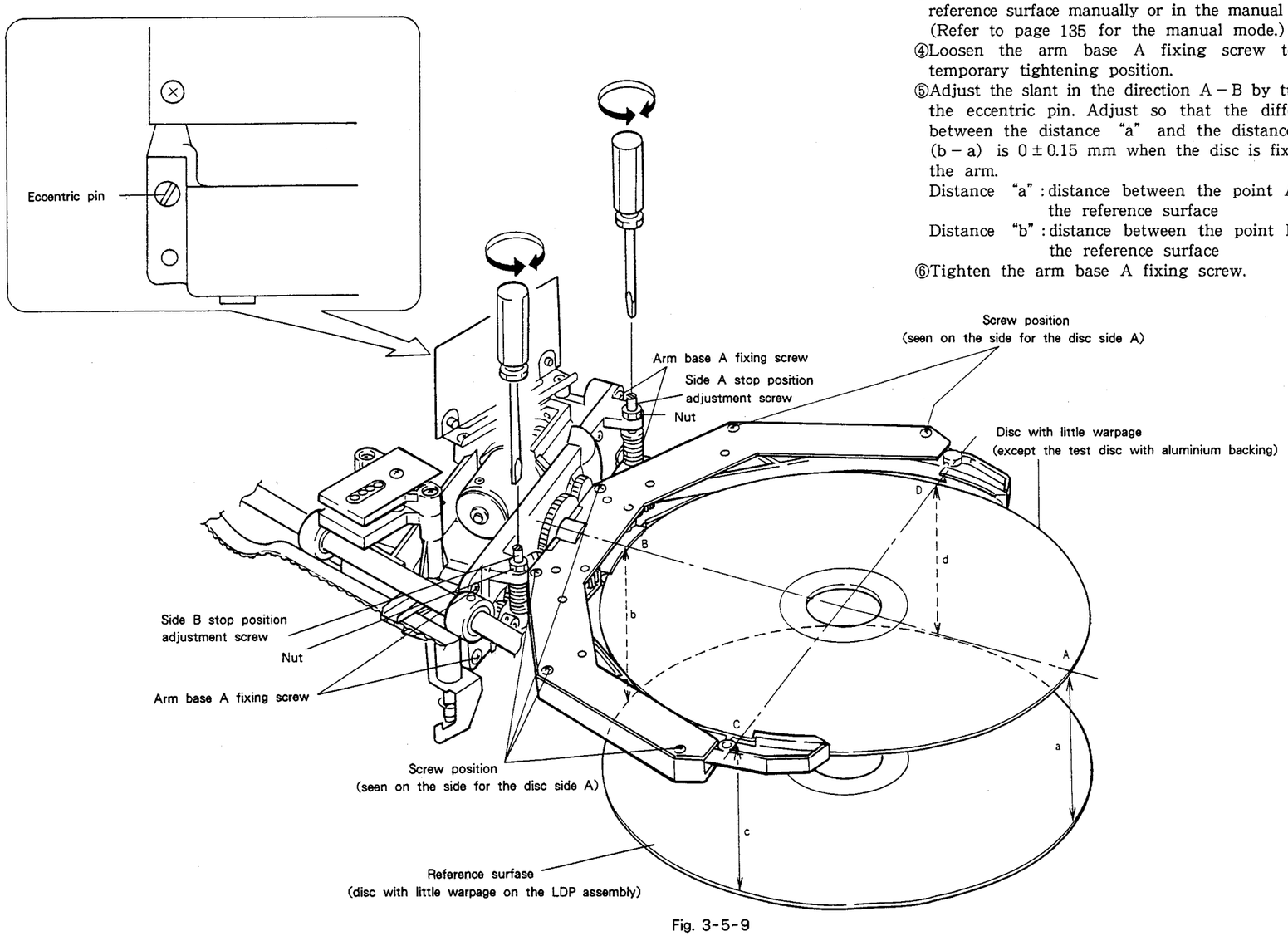

Fig. 3-5-9

3.5.5.1 Adjustment of the arm horizontal position (direction A – B in Fig. 3-5-9)

①Place a disc with little warpage (such as a test disc) on the LDP assembly and fix it with the clamper. The surface upper side of the disc is regarded as the reference surface. (Or, remove the LDP assembly and place a flat plate on the three bosses for the LDP assembly attachment. The surface of the plate is regarded as the reference surface.)

②Place a disc with little warpage (except a test disc with aluminium backing since it is heavier than a normal disc) so that the disc is fixed by the arm.

③Move the arm a few centimeters above the reference surface manually or in the manual mode. (Refer to page 135 for the manual mode.)

④Loosen the arm base A fixing screw to the temporary tightening position.

⑤Adjust the slant in the direction A – B by turning the eccentric pin. Adjust so that the difference between the distance "a" and the distance "b" (b – a) is 0 ± 0.15 mm when the disc is fixed by the arm.

Distance "a" : distance between the point A and the reference surface

Distance "b" : distance between the point B and the reference surface

⑥Tighten the arm base A fixing screw.

3.5.5.2 Adjustment of the reverse rotation stop position (direction C – D in Fig. 3-5-9)

⑦Prepare as described in steps ① and ② in the adjustment of the arm horizontal position. Move the arm approximately 15cm above the reference surface.

⑧Set the arm so that the side for the disc side A faces upward. (Screw positions on the arm are seen.)

⑨Loosen the nut of the side A stop position adjustment screw (the right one when seen from the arm side).

⑩Adjust the slant in the direction C – D by turning the side A stop position adjustment screw. Adjust so that the difference between the distance "c" and the distance "d" (d – c) is 0 ± 0.15mm when the disc is fixed by the arm.

Distance "c" : distance between the point C and the reference surface

Distance "d" : distance between the point D and the reference surface

Turn the screw clockwise to increase the distance "c" and counterclockwise to increase the distance "d".

⑪When the adjustment is completed, tighten the nut of the side A stop position adjstment screw.

⑫Turn over the arm manually or in the manual mode so that the side for the disc side B faces upward.

⑬Loosen the nut of the side B stop position adjustment screw (the left one when seen from the arm side).

⑭Adjust the slant in the direction C – D by turning the side B stop position adjustment screw. Adjust so that the difference between the distance "c" and the distance "d" (d – c) is 0 ± 0.15mm when the disc is fixed by the arm.

Distance "c" : distance between the point C and the reference surface

Distance "d" : distance between the point D and the reference surface

Turn the screw clockwise to increase the distance "d" and counterclockwise to increase the diatance "c".

⑮When the adjustment is completed, tighten the nut of the side B stop position adjustment screw.

3.5.6 Adjustment of the vertical drive system

3.5.6.1 Adjustment of the space for the disc slit
When the disc slit is replaced, adjust the space between the slit and the photo interrupter, and make verification of the vertical motor encoder pulse duty ratio/phase difference (as described in 3.5.6.2.) Adjust the space between the disc slit and the photo interrupter so that it is 0.5 ± 0.1mm by turning the hexagonal screw of the disc slit.

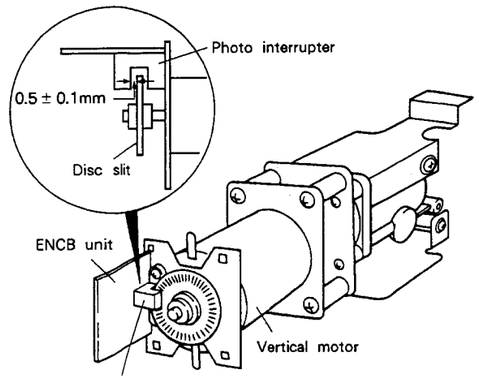

Fig. 3-5-10

3.5.6.2 Verification of the vertical motor encoder pulse duty ratio/phase difference

(1) Verify that the duty ratio and the phase difference of pins CN534 ③ (VOA) and ② (VOB) satisfy the following standard both in the rotation CCW (upward) and rotation CW (downward) when the VH base is activated in both directions in the manual mode. (Refer to page 135 for the manual mode.)

(For the rotation CW as observed from the motor axis)

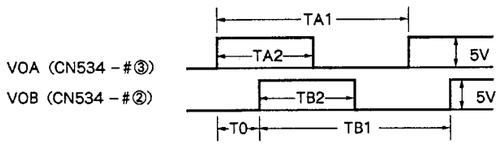

(For the rotation CCW as observed from the motor axis)

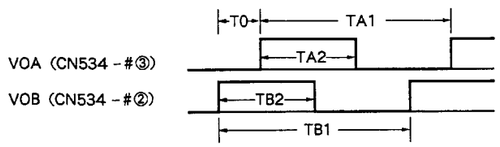

Fig. 3-5-11

	Formula to be applied	Standard
Duty ratio	DA (cw,ccw) $= \frac{TA2}{TA1} \times 100(\%)$ DB (cw,ccw) $= \frac{TB2}{TB1} \times 100(\%)$	DA, DB (cw, ccw) = 40 – 60 %
Phase difference	0 (cw) $= \frac{T0}{TA1} \times 360(°)$ 0 (ccw) $= \frac{T0}{TB1} \times 360(°)$	0 (cw, ccw) = 90 – 120°

Table 3-5-1

(2) If the above standard is not satisfied, the following standard should be satisfied.
(for the rotation CW as observed from the motor axis)

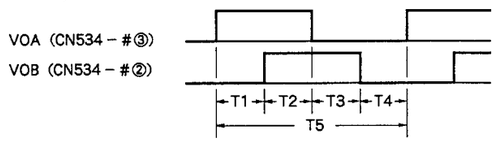

(for the ratation CCW as observed from the motor axis)

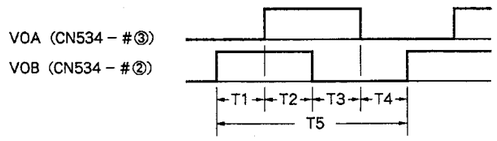

Fig. 3-5-12

	Formula to be applied	Standard
Division ratio	D1 (cw,ccw) $= \frac{T1}{T5} \times 100$ (%) D2 (cw,ccw) $= \frac{T2}{T5} \times 100$ (%) D3 (cw,ccw) $= \frac{T3}{T5} \times 100$ (%) D4 (cw,ccw) $= \frac{T4}{T5} \times 100$ (%)	D1 – 4 (cw,ccw) = 5 – 60 %

Table 3-5-2

(3) If neither the above standards (1) nor (2) are satisfied, the vertical motor speed detection system is out of order.

3.5.6.3 Adjustment of the VD pulley position
Set the VD pulley so that the screw comes into the V-shaped groove, and fix the VD pulley by the screw so that the space between the pulley and the flange of the gear box assembly is 0.5 ± 0.2mm.

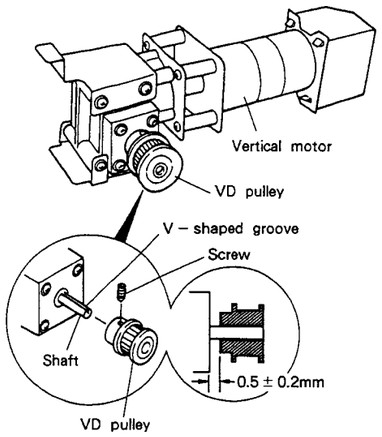

Fig. 3-5-13

3.5.6.4 Adjustment of the timing belt tension (between the pulley D and the VD pulley)
Adjust so that the pulley holder assembly is pulled by the force of 8 ± 1kg by turning the adjustment nut.

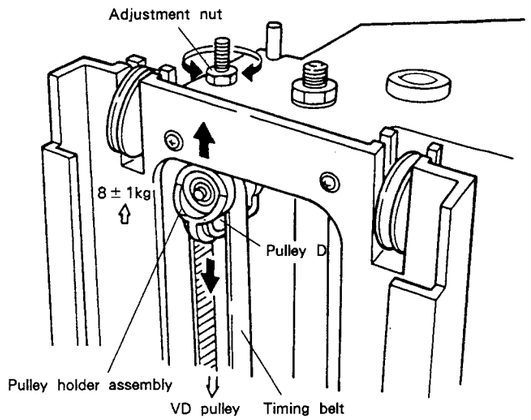

Fig. 3-5-14

3.5.6.5 Adjustment of the VMDR unit (DWP1011)

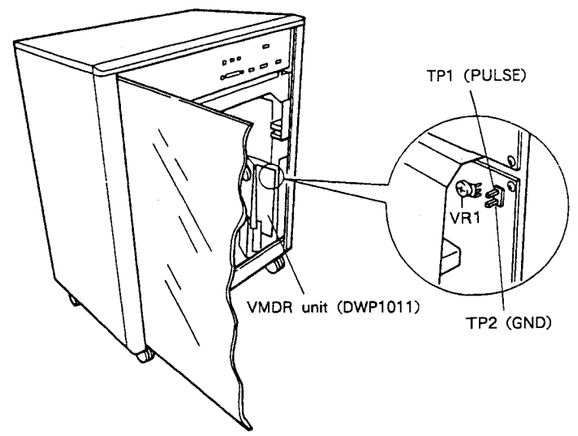

Fig. 3-5-15

Adjustment of the VMDR unit (DWP1011)

Item	Content and position of the adjustment	Adjustment specifications	Adjiustment value
1	Adjustment of the pulse width VMDR unit VR1 (DWP1011)	①Set VR1 to the mechanical center position. ②Adjust VR1 (semi-fixed resistance of 10 kilohms) so that the pulse width falls in the value shown to the right by observing TP1 of the VMDR unit using an oscilloscope. During the adjustment, the VH base should be moved upward or downward in the manual mode. (Refer to page 135 for the manual mode.) The vertical motor rotates at the lowest speed or the secondary speed. Turn VR1 clockwise to increase the pulse width (consequently to decrease the speed), and counterclockwise to decrease the pulse width (consequently to increase the speed.)	5V 0V 22 ± 1 μsec

3.5.6.6 Adjustment of the vertical stop position

1. Prepare a normal disc with no warpage. (Do not use a test disc with aluminium backing since it is heavier than a normal disc.)
2. Set the disc in the rack manually or in the manual mode so that the disc is fixed by the arm. See page 135 for the manual mode. When setting the disc manually, be sure to turn off the power. Otherwise, the internal mechanism may overrun and become harmful.
3. Move the arm upward manually or using the vertical movement mode 1 in the manual mode so that the disc comes to the position just between the upper surface of the disc stopper and the bottom surface of the upper rack (where the disc can be removed.) Do not use the vertical movement mode 2 since the arm will move up to the next stop position as controlled by the sensor.)
4. Loosen the two screws ① which fix the vertical stop position sensor (VSNB unit).
5. Observe the vertical stop position sensor signal by observing the DC voltage at pins 33, 35 and 36 of IC1 in the MCDR unit (DWG1053).
6. Turn the vertical stop position sensor (VSNB unit) adjustment screw ② so that the voltage at pins 33 and 35 is HIGH (5V) and the voltage at pin 36 is LOW (0V).
7. Tighten the two screws ① to fix the vertical stop position sensor (VSNB unit).
8. Move the arm downward manually or using the vertical movement mode 1 in the manual mode to the position where the disc can be set in the rack, At this time, verify that the voltage at pin 33 is LOW (0V) and the voltage at pins 35 and 36 is HIGH (5V). If these voltages are not obtained, readjust the adjustment screw.

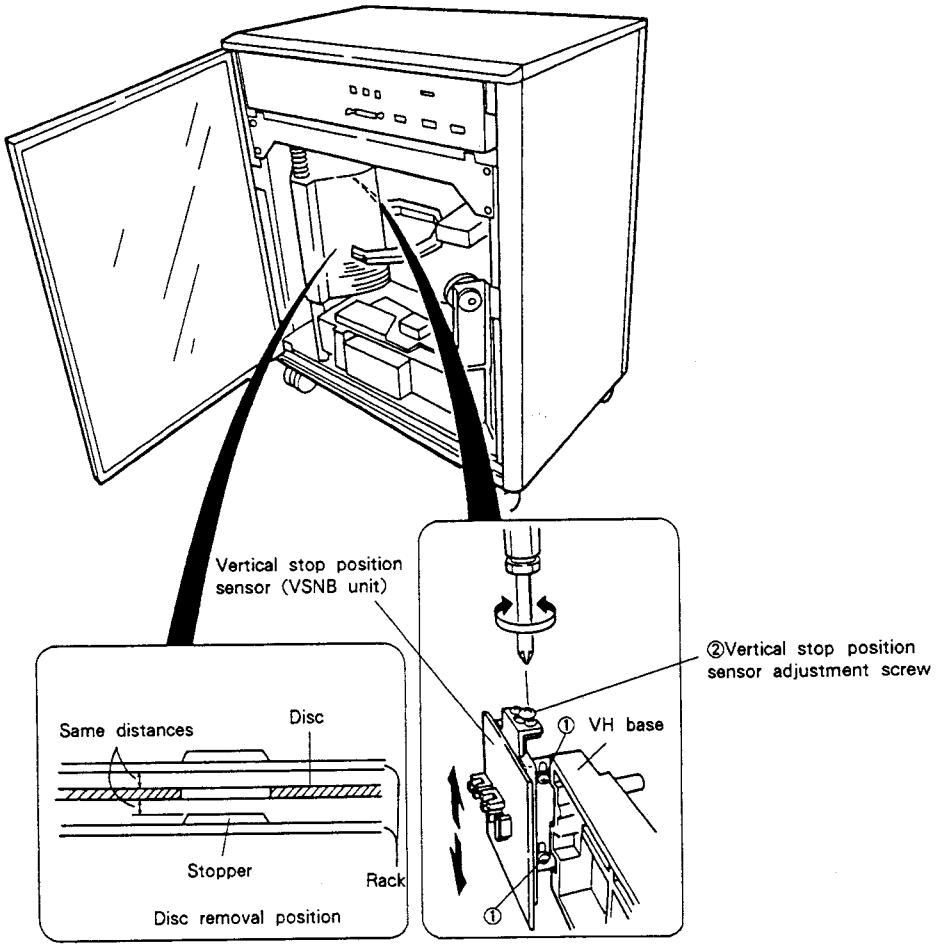

Fig. 3-5-16 Adjustment of the vertical stop position

3.5.7 Adjustment of the door position

If the door position is not correct, adjust it as described below.

3.5.7.1 Moving the door forward/backward

Loosen the fixing screw of the sliding hinge, adjust the position of the hinge and fix it again. If the upper and lower hinges are moved by the same amount, the door position is adjusted forward/backward. (Refer to Fig. 3-5-17.) If the two hinges are moved by the different amount, the slant of the door can be adjusted.

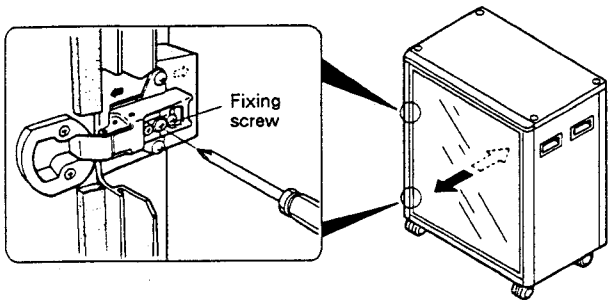

Fig. 3-5-17 Adjusting the door position forward/backward

3.5.7.2 Moving the door to the right/left

Turn the right/left position adjustment screw at the hinge clockwise to move the door to the right, and counterclockwise to move it to the left. If upper and lower adjustment screws are turned by the same amount, the door position is adjusted to the left or to the right. (Refer to Fig. 3-5-18.) If they are turned by the different amount, the door inclination can be adjusted. (Refer to Fig. 3-5-19.)

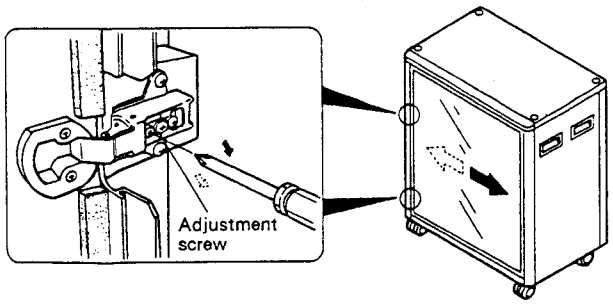

Fig. 3-5-18 Adjusting the door position to the right/left

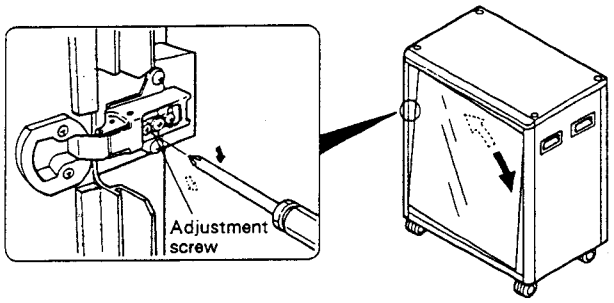

Fig. 3-5-19 Adjusting the door inclination

3.5.7.3 Moving the door upward/downward

Loosen the height adjustment screws of both the upper and lower sliding hinges, adjust the door height, and tighten the screws. (Refer to Fig. 3-5-20.)

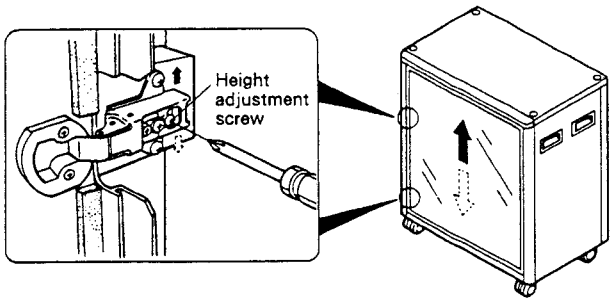

Fig. 3-5-20 Adjusting the door height

3.6 DISASSEMBLY

3.6.1 REPLACEMENT OF LDP ASSEMBLY (DXX1170)

[Removal]

1. Open the door by the key. When the door is open, the LC-V20 is automatically reset to its initial status, unless there is any trouble in the changer mechanism. (In the initial status, a dummy disc is clamped on the LDP assembly (DXX1170).)
2. Release the clamp manually or in the manual mode. When releasing manually, be sure to turn off the power in advance, or the internal machanism may overrun. For the manual mode, refer to page 135. Then return the dummy disc to the disc rack, and move the VH base to the very upper position. Turn off the power, if it has been turned on.
3. Remove the three screws ① which fix the LDP assembly (DXX1170) to the LDP base assembly.
4. Free the wires connected to the LDP assembly (DXX1170) from the catches, and put the LDP assembly in the standing position as shown in illustration a.
5. Remove the wires which connect the LDP assembly to the main unit from the LDP assembly, and remove the LDP assembly.

[Installation]

6. To install the LDP assembly (DXX1170), follow the reverse procedure of removal. When the door is closed and power is turned on after the LDP assembly has been installed, the LC-V20 automatically executes the operation check and enters the standby mode in the initial status.

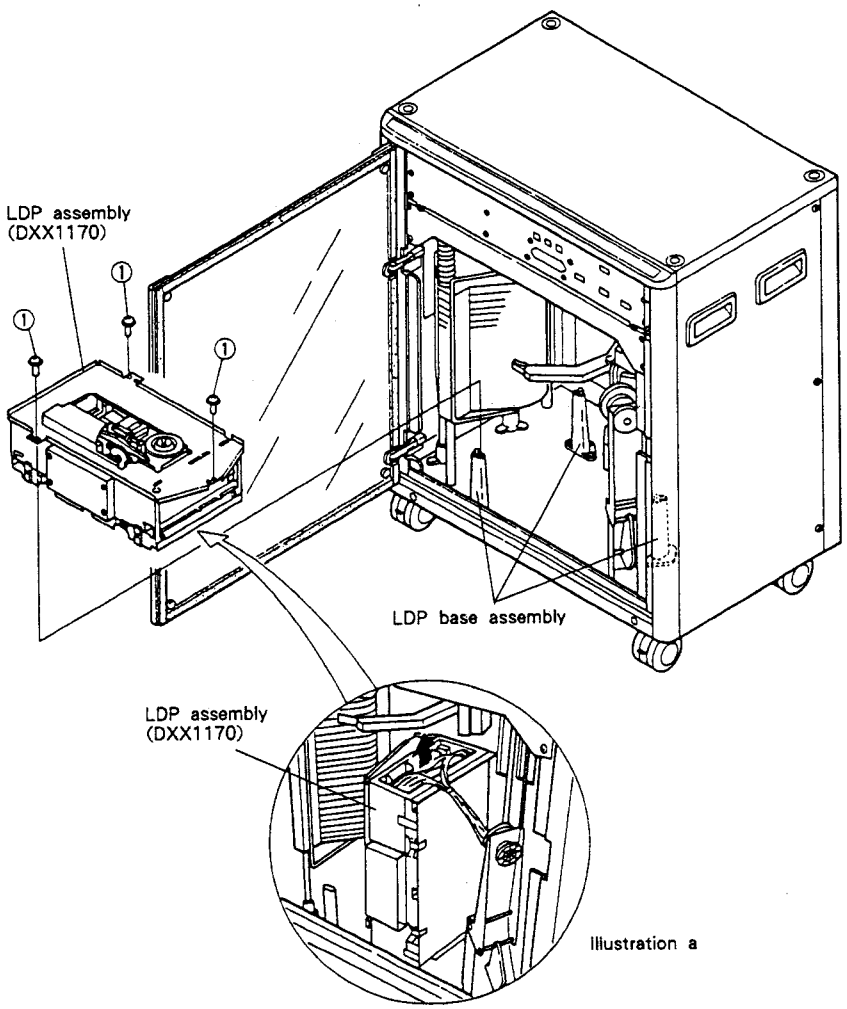

Fig. 3-6-1 Replacement of the LDP assembly (DXX1170)

3.6.2 REPLACEMENT OF THE ARMFUL ASSEMBLY (DXX1135)

[Removal]

1. Open the door by the key.
2. Move the armful assembly (DXX1135) to the position where it can be easily removed manually or in the manual mode. When moving manually, be sure to turn off the power in advance, or the internal machanism may overrun. Use the manual mode if there is no trouble in the moving system. (For the manual mode, refer to page 135.)
3. Remove the three screws ① and remove the sensor cover.
4. Remove the flexible cord (DDD1007) which connects the VCMD unit and the HCNC unit from CN426 on the VCMD unit.
5. Remove the two screws ② and remove the HSNB unit from the armful assembly (DXX1135). (Since the HSNB unit is a component of the armful assembly, it should be replaced at the same time.)
6. Loosen the screw ③ and loosen the belt presser. This allows the armfull assembly (DXX1135) to be removed from the timing belt (DWS-103).
7. Loosen the two screws ④ using a hexagon wrench, and remove the armful assembly (DXX1135) from the VH base together with the guide bar. Then remove the guide bar from the armful assembly (DXX1135).

[Installation]

8. To install the armful assembly (DXX1135), remove the HSNB unit temporarily, and follow the reverse procedure of removal. Be sure that the projections on the armful assembly are correctly aligned to the grooves of the timing belt.(Refer to illustration b.)

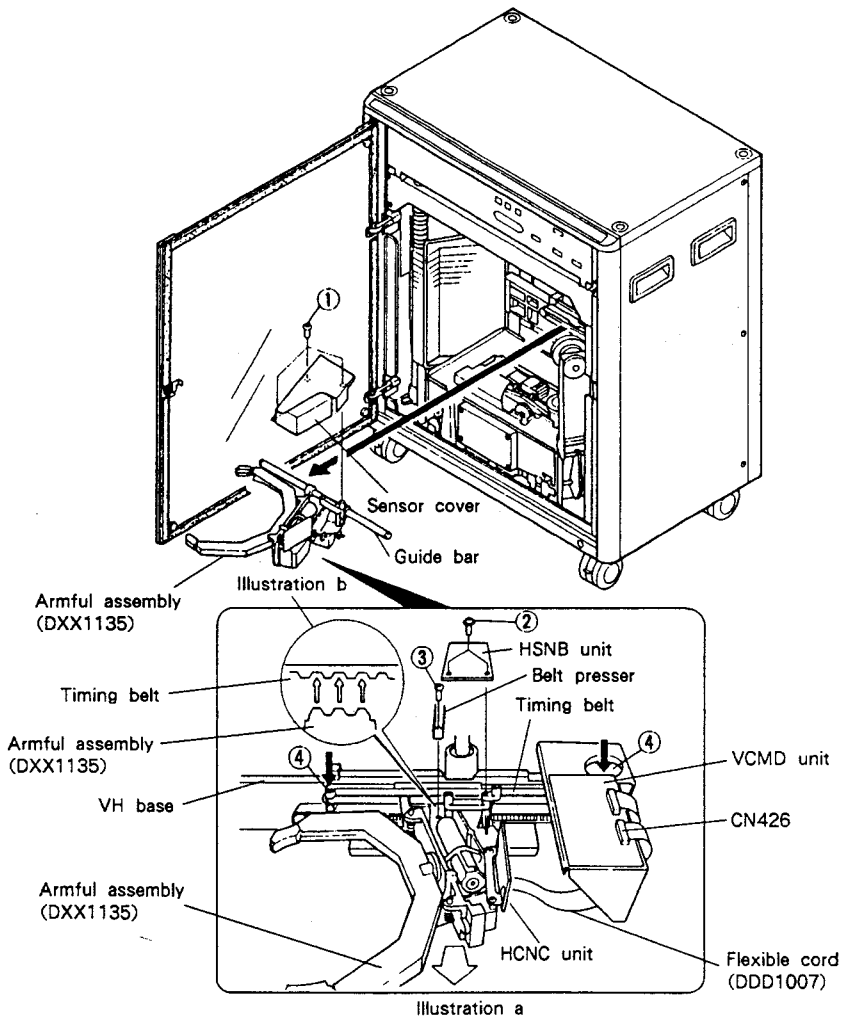

Fig. 3-6-2 Replacement of the armful assembly (DXX1135)

3.6.3 REMOVAL OF THE UPPER BOARD BLOCK

1. Open the door by the key.
2. Remove the two screws ①. The upper board block can be pulled out within the length of the wires.
3. To remove the upper board block completely, disconnect the wires which connect the upper board block to the changer mechanism and the LDP assembly, etc. Disconnect also CN612 and CN620 on the SCNT unit (DWG1064), CN601 and CN602 on the AVHB unit (DWK1006), and CN528, CN529 and CN531 on the SYPS unit (DWR1028). When installing the upper board block, make sure that the wires are reconnected correctly.

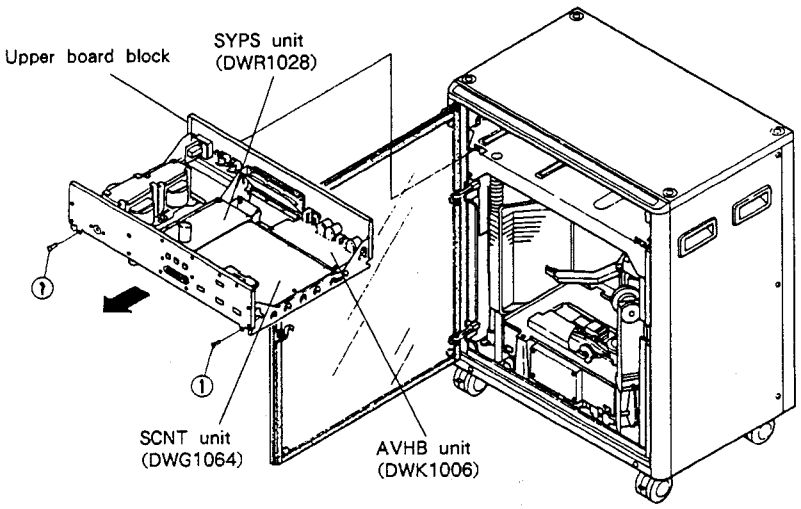

Fig. 3-6-3 Removal of the upper board block

3.6.4 REMOVAL OF THE DOOR

1. Open the door by the key.
2. Loosen the two screws ① (upper and lower) which fix the sliding hinges to the hinge plates.
3. Remove the sliding hinges from the hinge plates by sliding the hinges. Remove then the door.

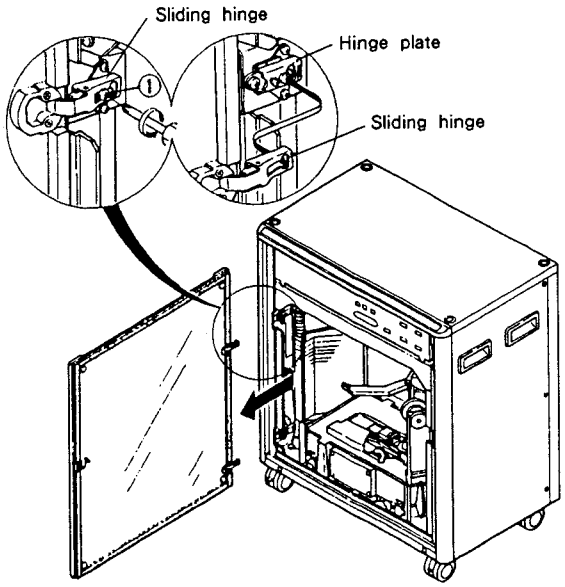

Fig. 3-6-4 Removal of the door

3.6.5 REMOVAL OF THE SIDE PANELS

(Remove the right panel and the left panel in the same way.)

1. Remove the screws ① (four on each side) and remove the catches. (The catches are fixed directly to the main unit.)
2. Remove the screws ② (three on each side).
3. Slide the side panels backward, and then remove them.

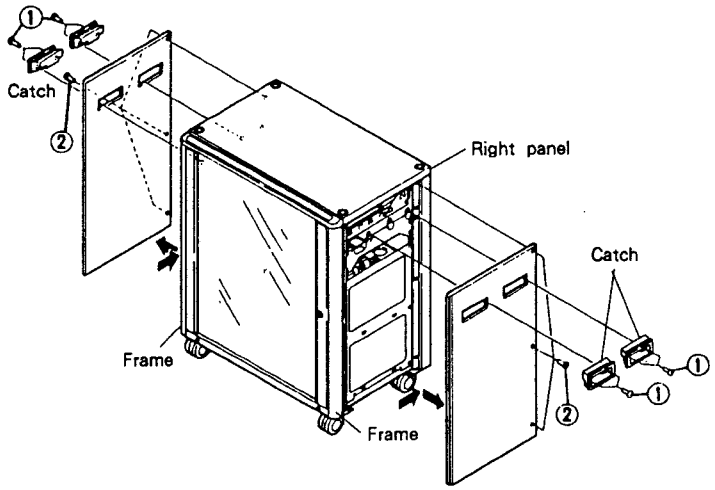

Fig. 3-6-5 Removal of the side panels

3.6.6 REMOVAL OF THE TOP PANEL

1. Remove the four screw covers B ① using a minus screw driver, etc.
2. Remove the four screws ② and then remove the top panel.

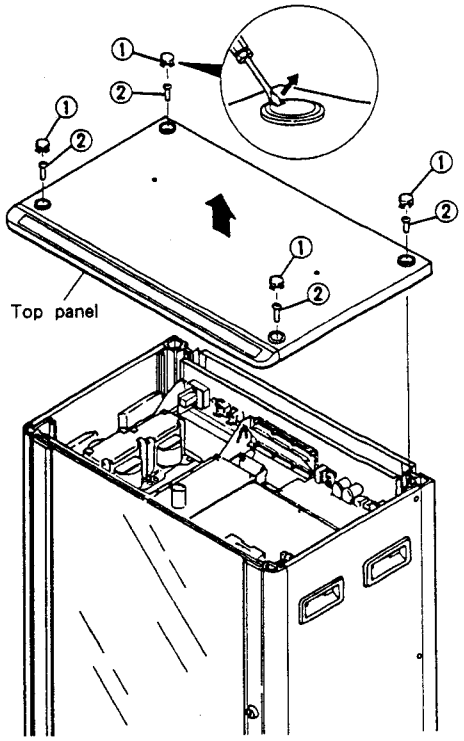

Fig. 3-6-6 Removal of the top panel

3.6.7 REMOVAL OF THE REAR PANEL

1. Remove the seven screws ① and then remove the rear panel.

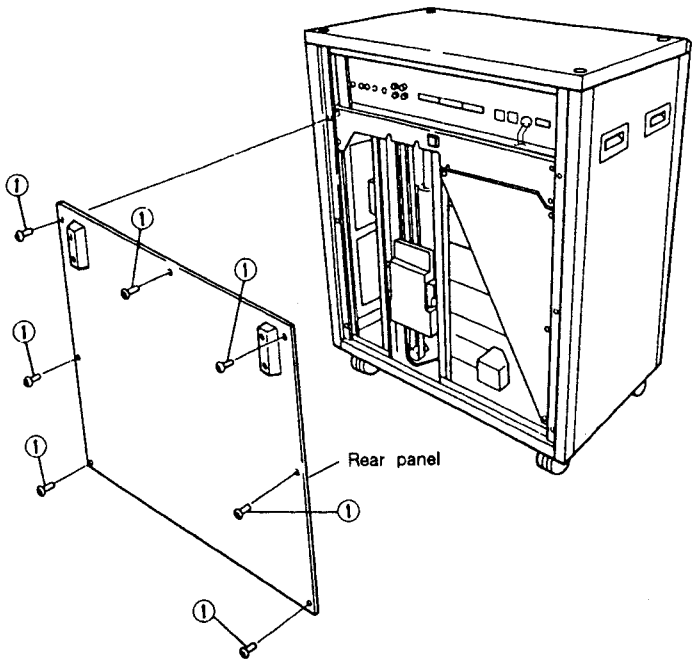

Fig. 3-6-7 Removal of the rear panel

3.6.8 REMOVAL OF THE UPPER FRAME

1. Remove the door, side panels, top panel, rear panel and upper board block. (Refer to pages 127 to 129 for each removal.)
2. Remove the wires from the upper frame.
3. Remove the screw ① which fix the upper frame to the back plate C.
4. Remove the sixteen screws ②
5. Remove the upper frame by pulling it upward.

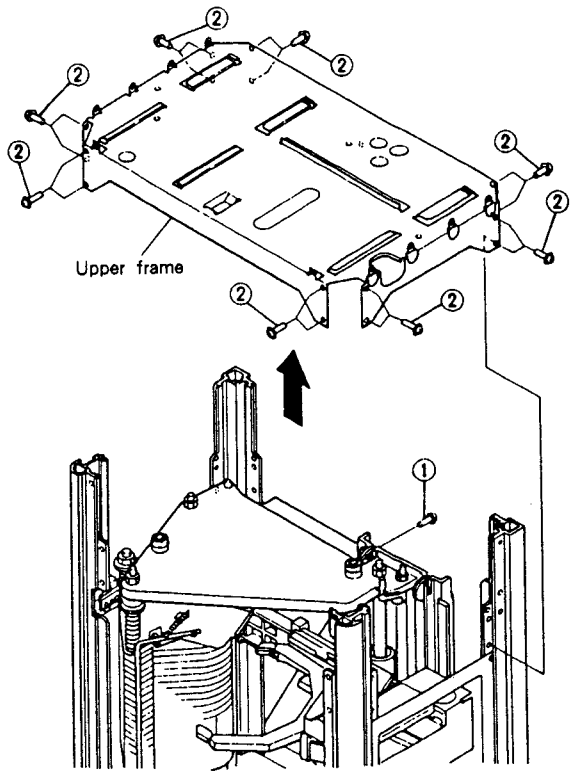

Fig. 3-6-8 Removal of the upper frame

3.6.9 REMOVAL OF THE UPPER BASE

1. Remove the upper frame. (Refer to "3.6.8 REMOVAL OF THE UPPER FRAME.")
2. Remove the pulley holder assembly by removing the nut ①.
3. Remove the two screws ② which fix the upper base to the rail.
4. Remove the three nuts ③
5. Remove the upper base by pulling it upward.

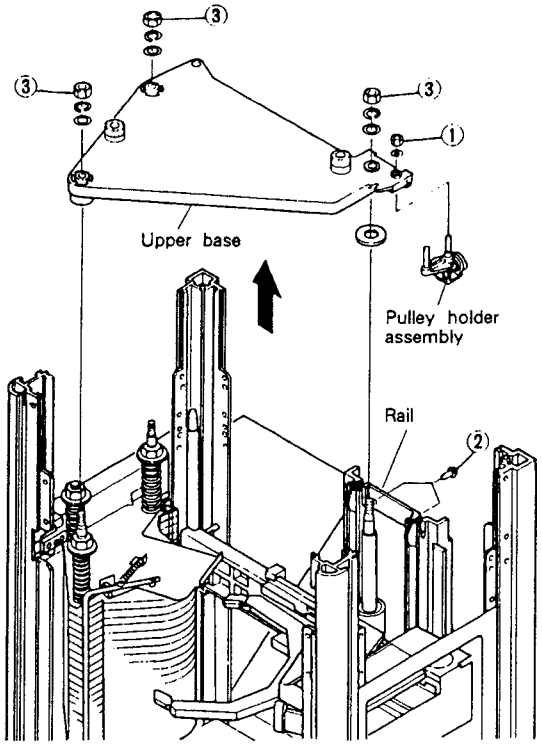

Fig. 3-6-9 Removal of the upper base

3.6.10 REMOVAL OF THE VH BASE

1. Remove the upper base. (Refer to "3.6.9 REMOVAL OF THE UPPER BASE.")
2. Move the VH base manually to the position where the wire assemblies fixed to the VH base are seen through the slits on the rails, and the holes of the weight assembly coincide with the holes of the rails. (The VH base can be moved easily when the timing belt is removed from the VD pulley, since the pulley holder has been removed at the upper base removal.)
3. Insert M6 screws or similar objects (such as screw drivers) to the holes of both the weight assembly and the rails so that the weight assembly will not drop when the wire assembly is removed.
4. Remove the screw ① and remove the belt presser.
5. Support the VH base by the hand so that it will not drop when the wire assembly is removed, and remove the wire assembly by removing the two nuts ②.
6. Remove the VH base by pulling it upward.

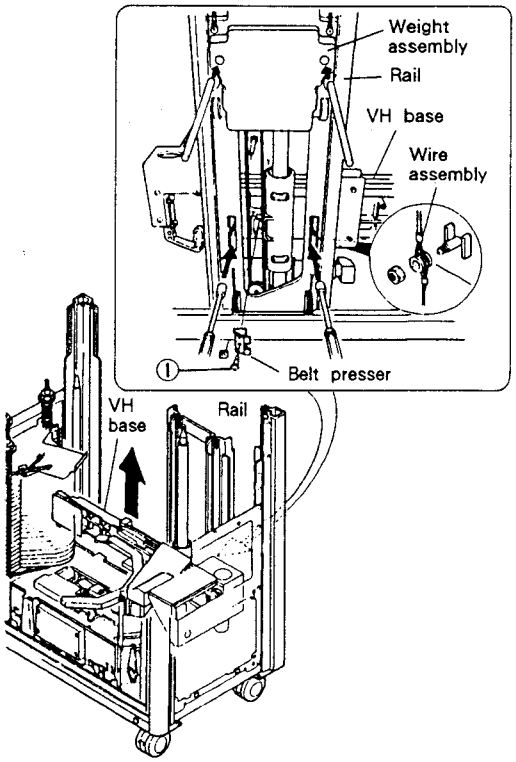

Fig. 3-6-10 Removal of the VH base

3.6.11 HOW TO MOVE THE VH BASE WHEN IT STOPS HALFWAY

1. **Moving the VH base manually**
   Refer to Fig. 3-6-11. Turn the screw ① 6 or 7 times using a hexagon screw driver or a hexagon ball driver with a distance of 2.5mm between the two opposite sides. Then push down the screw ① and loosen the belt. The VH base can be moved manually.
2. **Moving the VH base when it has stopped on the LDP during playback (and the manual mode cannot be entered by any cause)**
   If the clamper is moved down, lift up the clamper manually by turning the crank arm or the SW cam to the right, since the screw ① cannot be accessed by the screw driver. (Refer to Fig. 3-6-12.) Remove the disc from the arm, and loosen the screw. Then proceed as described above 1.
3. **Fixing the belt (for installation)**
   Before turning the screw ①. make sure that the belt and the belt presser coincide correctly.

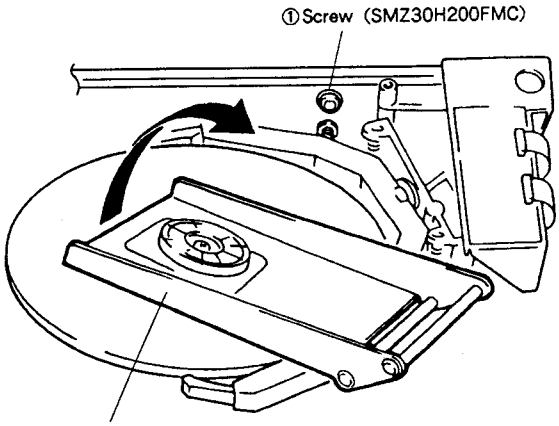

Lift up the clamper.
(Do not pull the clamper by its edge. Turn the cramk arm on the motor or the SW cam.)

Fig. 3-6-11

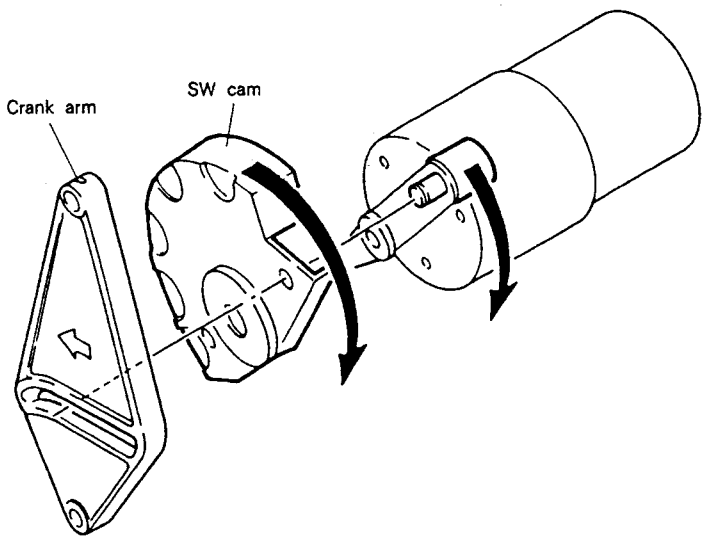

When the crank arm (die cast part) or the SW cam of the motor is turned to the right, the clamper is lift up.

Fig. 3-6-12

3.7 SERVICE MODE

The LC-V20 is supplied with the service mode for the operation test and checking of the changer mechanism in the laser juke box.

1. Normal mode
2. Manual mode

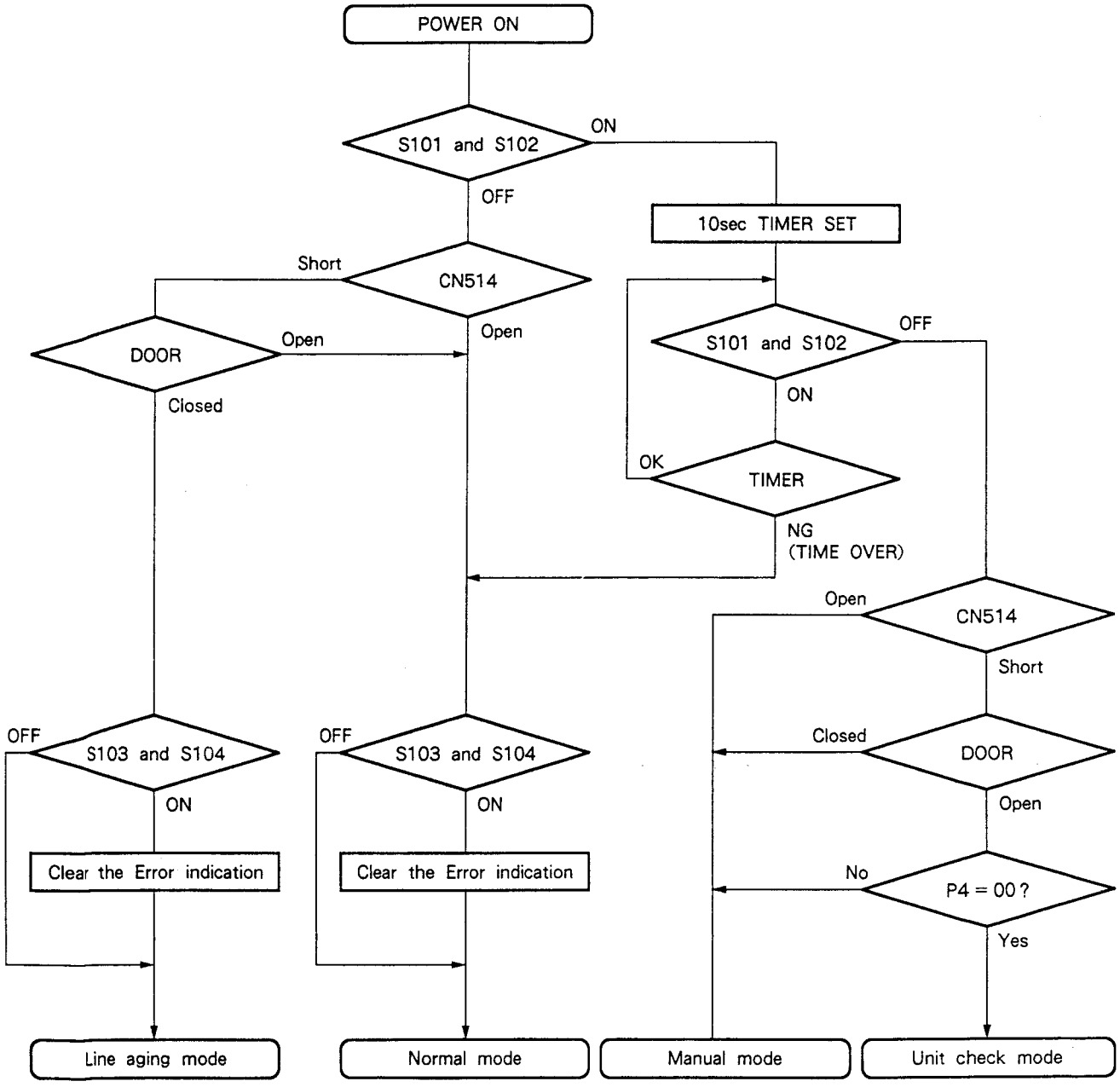

How to enter each mode

3.7.1. NORMAL MODE

In this mode, the LED on the MCDR unit is not light except when an error occurs, or S101 or S102 is pressed.

● Error indication

When the CPU which controls the mechanism detects an error, the error indication appears. The error indication and the error numbers appear alternately in each 0.8 second.

Ex.)

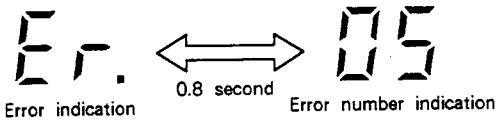

When an error occurs, the error number indication remains lit until the error indication is cleared. When the power is turned on again and operation is possible, only the error number is displayed. Press S101 and S102 simultaneously to see the operation mode at the moment the error occurred.

How to clear the error indication

Turn on the power while pressing S103 and S104. The error indication will be cleared.

● If only S101 is pressed

The 7-segment LED will show the operation mode of the CPU which controls the mechanism.

● If only S102 is pressed

The 7-segment LED will show the vertical address (in decimal notation). The address of the first tray is 1, and the address of the LDP is 25. The indication UL. (up limit) means the position above the first tray, and the indication dL. (down limit) means the position under the LDP.

Error numbers

Error No.	Meaning
01	Trouble in the vertical sensor
02	Vertical address count error
03	Vertical motor overrun (Trouble in rotary encoder pulse)
04	Overrun in vertical movement (Trouble in address count lap time)
05	Trouble in 24V power line (Trouble in fuse, etc.)
07	Trouble caused by time over error in vertical movement
10	Trouble in AV SELECT signal from LDP
12	Trouble in EEP ROM
17	Time over error in movement
27	Time over error in horizontal movement
31	Trouble in the clamper switch (Simultaneous activation, etc.)
37	Time over error in clamper operation
41	Trouble in chuck sensor (Two chuck sensor outputs are both HIGH.)
47	Time over error in chuck operation
51	Trouble in turnover sensor (Two turnover sensor outputs are both HIGH.)
56	Turnover trouble at the rack side (Operation impossible)
57	Time over error in turnover movement
99	No backup memory, no place where the disc should be returned.

Operation modes

● Initial modes

Mode No.	Mode
0.0	Chuck open/close when disc clamped on LDP, waiting SPDL STOP
0.1	Horizontal movement toward LDP
0.2	Clamp down, chuck closed
0.3	Clamp initial up
0.4	Initial vertical movement, movement to the turnover address (13th disc)
0.5	Turnover (B→A)
0.6	Vertical movement toward tray
0.7	Horizontal movement, chuck open, vertically 4.2mm down
0.8	Horizontal movement toward tray, chuck open, vertically down
0.9	Vertical backup memory cleared, waiting chuck open
0.A	Clamp initial up, checking vertical address
0.B	Vertical movement to the dummy disc address
0.C	Chuck close start
0.D	Chuck close, vertically 4.2mm up
0.E	Horizontal movement toward LDP
0.F	Vertical movement, checking vacant tray

● Waiting modes

Mode No.	Mode
1.1	Sending DATA REQ to MPU of SCNT
1.2	Waiting selection number data from MPU of SCNT

● Setting modes

Mode No.	Mode
2.0	Vertical movement
2.1	Chuck close start
2.2	Chuck closed, vertically 4.2mm up
2.3	Horizontal movement toward LDP
2.4	Vertical movement and turnover movement to the 13th disc
2.5	Turnover (A→B)
2.6	Vertical movement upward above the LDP
2.7	Clamp down, chuck open start
2.8	Chuck open

● LDP modes

Mode No.	Mode
3.0	Sending PLAY command to the LDP
3.1	Waiting spindle start, checking existence of priority
3.2	Checking existence of chapters, searching for chapter.
3.3	Waiting end of chapter search, sending start request signal to MPU of SCNT
3.4	Setting chapter repeat
3.5	Starting playback
3.6	Releasing audio/video squelch
3.7	Standard playback mode
3.8	CM disc play chapter number detected
3.9	CM disc playback mode, checking playback chapter
3.A	Sending playback end signal to MPU of SCNT, sending stop signal to the LDP
3.B	Sending stop signal to the LDP, sending DATA REQ to MPU of SCNT
3.C	Waiting data from MPU of SCNT
3.D	AV SELECT signal verified
3.E	Chapter end, stop mode set
3.F	Chapter end detected

● Return modes

Mode No.	Mode
4.0	Chuck open
4.1	Chuck open
4.2	Chuck open start
4.3	Vertically 4.2mm down, chuck open start
4.4	Checking existence of disc, horizontal movement toward tray
4.5	Turnover (B→A), movement to the vertical disc address
4.6	Turnover (B→A)
4.7	Vertical movement and turnover (B→A)
4.8	Checking spindle stop, chuck closed, clamp up

● Door modes

Mode No.	Mode
5.0	Vertical movement to the dummy disc address
5.1	Chuck close start
5.2	Chuck close, vertically 4.2mm up
5.3	Horizontal movement toward LDP
5.6	Vertical movement upward above the LDP
5.7	Clamp down
5.8	Door mode
5.F	Door mode (mechanism being initialized)

3.7.2. MANUAL MODE

The manual mode is entered when the power is turned on while pressing S101 and S102 on the MCDR unit.
If S101 and S102 are kept pressed for more than 10 seconds after the power is turned on, the manual mode will be released. In the manual mode, operation of each motor, etc. can be checked.

● **Operation**

In the manual mode, select the required mode by S101 or S102, and activate operation by S103, S104 and the door switch.

S101	S102	Mode indication	Mode	S103	S104	DOOR SW
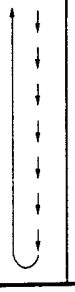	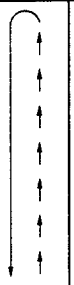	0	LED test mode	–	–	–
		1	Vertical movement mode 1	UP	DOWN	STOP
		2	Horizontal movement mode	Toward LDP	Toward rack	–
		3	Clamp operation mode	UP	DOWN	–
		4	Chuck operation mode	Closed	Open	–
		5	Turnover operation mode	Side A to B	Side B to A	–
		6	Error histogram monitor mode	Selecting error histogram address	Reading error mode No.	Operation mode No.
		7	Vertical movement mode 2	UP	DOWN	STOP

● **LED test mode (n.0)**

When the manual mode is entered, first the LED test mode is activated, In this mode, each segment of the 7-segmant LED on the MCDR unit is lit up one by one.

● **Vertical movement mode**

There are two vertical movement modes, n. 1 and n. 7.

n. 1 mode

In this mode, the VH base moves upward or downward while S103 or S104 is kept pressed. Approx. 1 second after the VH base started moving, the speed changes from the lowest to the second. The 7-segment LED indicates the vertical address.

n. 7 mode

In this mode, the VH base moves upward or downward while S103 or S104 is kept pressed, and when S103 or S104 is released, the VH base stops at the next stop position (where a disc is chucked or removed from the tray). When the door switch is pressed, the VH base stops immediately regardless of the stop position, The 7-segment LED indicates the vertical address.

● **Horizontal movement mode**

In this mode, the VH base moves toward the LDP or toward the rack at the low speed while S103 or S104 is kept pressed. When the sensor detects stop position, the VH base stops.

● **Clamp operation mode**

In this mode, the clamp moves upward or downward while S103 or S104 is kept pressed. When the switch detects stop position, the clamp stops.

● **Chuck operation mode**

In this mode, the chuck opens or closes while S103 or S104 is kept pressed. When the sensor detects stop position, the chuck stops.

● **Turnover operation mode**

The arm turns over from side A to side B or vice versa while S103 or S104 is kept pressed. When the sensor detects stop position, the arm stops.

● **Error histogram monitor mode**

In this mode, errors previously occurred can be displayed. The most recent eight errors are shown. First select the error histogram address by S103, then press S104 to display the content of the error. (Refer to page 133 for the error numbers.) When the door switch is pressed, the operation (Refer to page 134 for the operation modes) mode at the moment the error occurred is displayed. If no error occurred, a horizontal bar will be displayed.

S103		S104	DOOR SW
	-0	The error number of the current one is displayed.	The operation mode at the moment error occurred is displayed.
	-1	The error number of the one occurred previously by 1 step is displayed.	The operation mode at the moment error occurred is displayed.
	-2	The error number of the one occurred previously by 2 steps is displayed.	The operation mode at the moment error occurred is displayed.
	-3	The error number of the one occurred previously by 3 steps is displayed.	The operation mode at the moment error occurred is displayed.
	-4	The error number of the one occurred previously by 4 steps is displayed.	The operation mode at the moment error occurred is displayed.
	-5	The error number of the one occurred previously by 5 steps is displayed.	The operation mode at the moment error occurred is displayed.
	-6	The error number of the one occurred previously by 6 steps is displayed.	The operation mode at the moment error occurred is displayed.
	-7	The error number of the one occurred previously by 7 steps is displayed.	The operation mode at the moment error occurred is displayed.

4. FOR LJ-V20-K/AEM TYPE

NOTES :
- Parts without part number cannot be supplied.
- The ⚠ mark found on some component parts indicates the importance of the safety factor of the part. Therefore, when replacing, be sure to use parts of identical designation.
- Parts marked by "◉" are not always kept in stock. Their delivery time may be longer than usual or they may be unavailable.

Contrast of Miscellaneous Parts

The LJ-V20-K/AEM type is the same as the LJ-V20/AEM type with the exception of the following sections.

Mark	Symbol & Description	Part No.		Remarks
		LJ-V20/AEM type	LJ-V20-K/AEM type	
	Sign board	DAH1204	DAH1179	
	Return lever sheet A	DAH1207	DAH1183	
	Return lever sheet B	DAH1208	DAH1184	
	Name plate A	DAH1210	DAH1187	
	Name plate B	DAH1211	DAH1188	
	Key sheet	DAH1230	DAH1232	
	Wood frame assembly	Non supply	Non supply	
	Electrical decoration panel	DNK1242	DNK1229	
	Return tray A	DNK1243	DNK1233	
	Operation panel	DNK1246	DNK1230	
	Side panel	DNK1247	DNK1237	
	Key panel assembly	DXA1075	DXA1072	
	Indication plate E/S	DXX1154	DXX1159	

5. FOR LC-V20-K/HEM TYPE

NOTES :
- Parts without part number cannot be supplied.
- The ⚠ mark found on some component parts indicates the importance of the safety factor of the part. Therefore, when replacing, be sure to use parts of identical designation.
- Parts marked by "◉" are not always kept in stock. Their delivery time may be longer than usual or they may be unavailable.

Contrast of Miscellaneous Parts

The LC-V20-K/HEM type is the same as the LC-V20/HEM type with the exception of the following sections.

Mark	Symbol & Description	Part No.		Remarks
		LC-V20/HEM type	LC-V20-K/HEM type	
	Name plate	DAH1214	DAH1176	
	Front glass	DAN1007	DAN1006	
	Side panel L	DMK1026	DMK1022	
	Side panel R	DMK1027	DMK1023	
	Rear panel	DMK1028	DMK1024	
	Top panel	DMK1029	DMK1025	
	Under frame F	DNH1137	DNH1097	
	Under frame R	DNH1138	DNH1098	
	Frame FR	DNH1139	DNH1118	
	Frame FL	DNH1140	DNH1119	
	Frame R	DNH1141	DNH1120	
	Catch	DNK1250	DNK1138	
	Screw cover A	Non supply	Non supply	
	Screw cover B	Non supply	Non supply	
	Hole cap	DNK1251	DNK1223	
	Decoration panel	DNK1252	DNK1225	
	Screw	Z39-009	Z39-003	
	Screw	BBZ40P080FCR	BBZ40P080FZK	

6. SPECIFICATION

LJ-V20-K/LJ-V20 (SELECTION COMMANDER)

Power requirements ..... 22 VAC, 50 Hz
Power consumption ..... 37 W
Outside dimensions ..... 603 (W) × 605 (H) × 240 (D) mm
Weight ..... 25 kg
Allowable operating temperature ..... +5°C to +35°C
Allowable operating humidity ..... 5% to 90%
Max. number of selectable music numbers ..... 99 numbers
Accessories
- Rate seal ..... 1 set
- ND sheet 2
- locking plate 1
- Coin sheet ..... 1 set

LC-V20-K/LC-V20 (VIDEO DISC AUTOCHANGER)

Player model ..... LaserVision video disc player
Applicable discs ..... Laser juke disc
Power requirements ..... AC 220V/240V (Switchable), 50 Hz
AC outlet
- SWITCHED ..... 2 (TOTAL 500 W MAX)

Power consumption ..... 246 W
Outside dimensions ..... 642 (W) × 780 (H) × 425 (D) mm
Weight ..... 64.5 kg
Allowable operating temperature ..... +5°C to 35°C
Allowable operating humidity ..... 5% to 90%
Video output
- Output level ..... 1 Vp-p (when a 75-ohm load is applied, synchronous and negative)
- Output terminal ..... pin jack

Sound output
- Output level ..... 500 mV (100% modulation, 47k-ohm load)
- Output terminal ..... stereo pin jack

Headphone output
- Output level ..... 650 mV (100% modulation, 32-ohm load)
- Output terminal ..... stereo mini-jack

Printer output ..... 8-bit parallel (CENTRONIX-based)
Functions
- Discs 20
- Noise reduction ..... automatic switchover CX on (not switchable)
- Advertising play ..... ON/OFF
- Programmed music selection ..... Max. 99
- Best hit selection ..... Max. 5
- Selection count output ..... Output to printer with Centronics 8-bit parallel interface possible
- Selection commander ..... Up to 3 can be connected
- Coin accepter ..... MS-111 made by MARS (option) SENTINEL 30/35 made by COIN CONTROL LTD. (option)
- Menu display ..... Max. 150
- Coin capacity ..... Over 2,500 (21.4mm diameter × 1.7mm thickness)

Accessories
- Audio cord 1
- Video cord 1
- Terminal cover 1
- Cord clamper 3
- Control cord 1
- Operating instructions 1
- Key 1

CX is a trade mark of CBS Inc.
This unit meets the CX EXPANDING SPECIFICATION.

7. PANEL FACILITIES

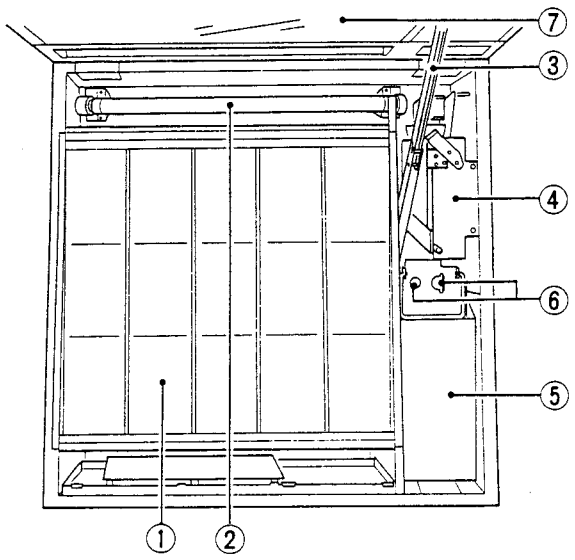

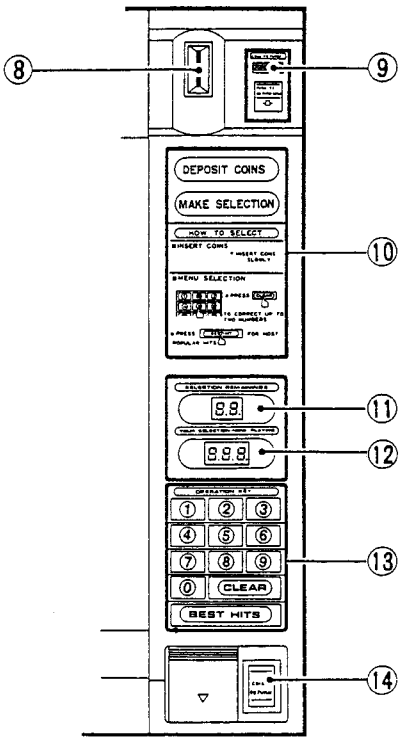

① Menu board

② Fluorescent lamp for menu illumination

③ Arm

④ Coin acceptor

⑤ Coin box

⑥ Key-fixing holes for the coin box

⑦ Door

(Operation unit)

⑧ Coin insertion hole

Caution
Inserted coins will not be returned even though the coin-return lever is operated. Insert only the amount of coins needed.

⑨ Coin-return lever

Operate the coin-return lever when a deformed or steel imitation coin is caught. This will cause the coin to return via the coin-return hole.

⑩ Operation guide display

- DEPOSIT COINS.
  When this indication is lit up, you can insert coins.
  When it is off, inserted coins are returned via the coin-return hole.
- MAKE SELECTION.
  This indication is lit up when the system is ready for music selection.

⑪ SELECTION REMAININGS.

This indication shows the number of pieces of music you can select using the inserted coins.

⑫ YOUR SELECTION/NOW PLAYING

This indication shows the number of the piece of music entering by using numeric keys.
When no key input is being done, this indication shows the number of the piece of music currently being played.

⑬ OPERATION KEY

- Numeric keys
  Use these keys to enter the number of the piece of music to be played.
- CLEAR key
  The selection can be canceled by pressing the CLEAR key before entering the last digit.
- BEST HIT key
  The most-popular piece of music on the location is automatically selected.

⑭ Coin-return hole

When a coin is inserted while the indication "DEPOSIT COINS" is off or unacceptable kinds of coins are inserted, they are returned via this hole.

(REAR PANEL)

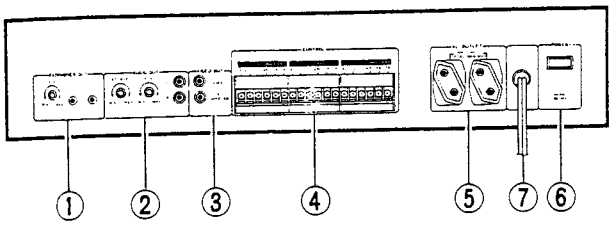

① HEADPHONES OUT (mini jack) and LEVEL control

② AUDIO OUT (pin jacks), juke level control, and advertising play level control

These jacks connect to the input jacks of a stereo amplifier using the audio cord supplied with this system. Use the LEVEL and AD LEVEL controls to adjust the audio level for playing juke and advertising discs.

③ VIDEO OUT (pin jack)

- VIDEO OUT 1 ——— Juke play only. (juke)
- VIDEO OUT 2 ——— Juke play and advertising play. (juke/advertising)

④ CONTROL (SELECTION COMMANDER 1, 2, 3)

Connects to a maximum of three selection commanders.

⑤ AC OUTLETS SWITCHED TOTAL 500W MAX

Power supplied through this outlet is turned on and off by this equipment's POWER switch. Total electrical power consumption of connected equipment should not exceed 500W.

NOTE :
Do not connect appliances with high power consumption such as heaters, irons, or television sets to the AC OUTLETS, in order to avoid overheating or fire risk.
This can cause this equipment to malfunction.

⑥ Power switch (ON, OFF)

⑦ Power cord

(FRONT PANEL)

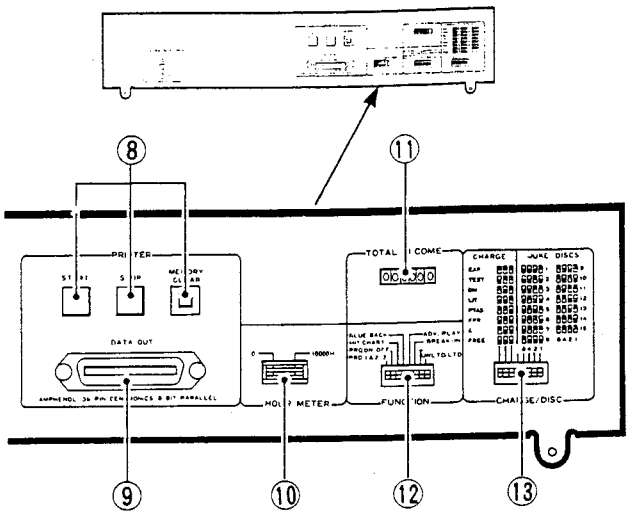

⑧ Printer output control button

- START ——— Outputs stored data via a printer.
- STOP ——— Stops printout.
- MEMORY CLEAR —— Deletes the contents of the memory unit for the number of selections and income data.

⑨ DATA OUT terminal

Use the AMPHENOL 36-pin, CENTRONIX-based, 8-bit parallel printer to print out the number of music selections by discs or that by music pieces and income data.

⑩ HOUR METER (0 to 10,000 hours)

Displays the duration of electricity applied to the video disc autochanger.

⑪ Income counter

Displays the amount of coins deposited.
(This income counter cannot be reset.)

⑫ FUNCTION switches

⑬ CHARGE/DISC switches