PIONEER
The Art of Entertainment

No. : SI-V49037
Date : Oct.11,1994

## Please correct your service manual

| MODEL [S/M NO. ] | PAGE | INCORRECT | CORRECT |
|---|---|---|---|
| CLK-V920 [ARP2365] | 14 | The following part is available as spare parts.<br>No. 104 Part No. VEC1004 Description Cushion | |
| CLD-D501 -D550 [ARP2458] | 3 | 104 | |
| CLD-D502 -D560 [ARP2677] | 3 | 104 | |
| CLD-D702 -D760 [ARP2692] | 3 | 104 | |
| CLD-D701 -D750 [ARP2642] | 9 | 104 | |
| CLD-V202 -150K -1810K [ARP2589] | 3 | 102 | |
| CLD-V840 -2720K [ARP2802] | 3 | 104 | |
| CLD-2710K [ARP2545] | 7 | 104 | |
| CLD-2850 [ARP2787] | 7 | 104 | |
| CLD-J420 [RRV1016] | 4 | The following part is available as spare parts.<br>No. 6 Part No. VEC1004 Description Cushion | |
| CLD-J720 [RRV1015] | 4 | 6 | |
| CLD-J910 CLX-J310D [ARP2674] | 2 | 6 | |

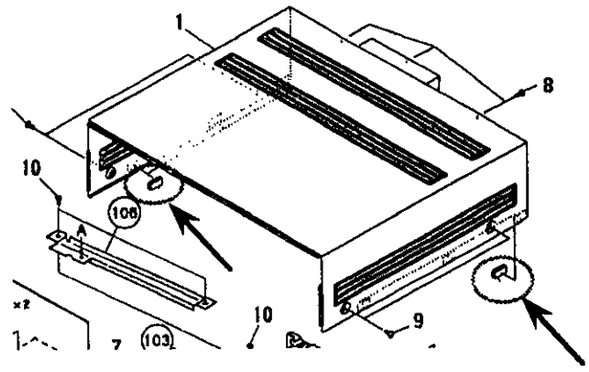


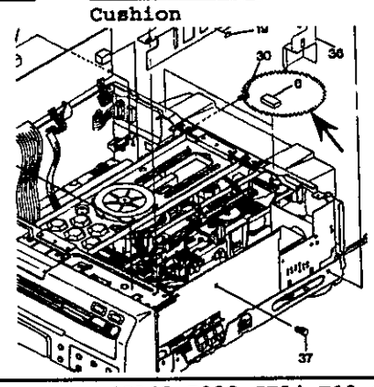


PIONEER ELECTRONIC CORPORATION (QA49-P020,SI94-T19 SMM-AN 105)

Y. IMAMIZU, MANAGER
HE Engineering Section
Service Div.

| MODEL [S/M NO. ] | PAGE | INCORRECT | CORRECT |
|---|---|---|---|
| CLD-V2300D [ARP2599]<br><br>CLD-V2400 [RRV1015] | 3<br><br>3 | The following part is available as spare parts.<br>No. 102 Part No. VEC1004 Description Cushion<br><br>102 | 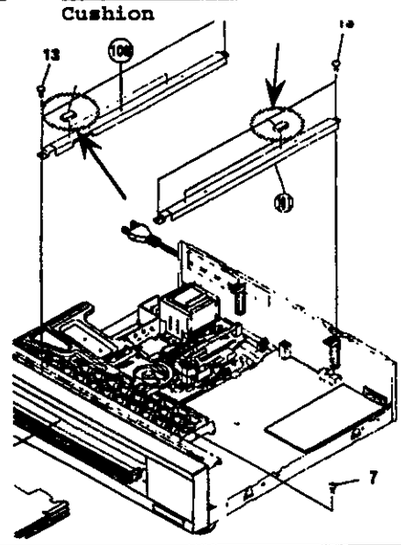 |
| CLD-1080 [ARP2023]<br><br>CLD-1750 [ARP2457] | 3<br><br>3 | The following part is available as spare parts.<br>No. 102 Part No. VEC1004 Description Cushion<br><br>102 | 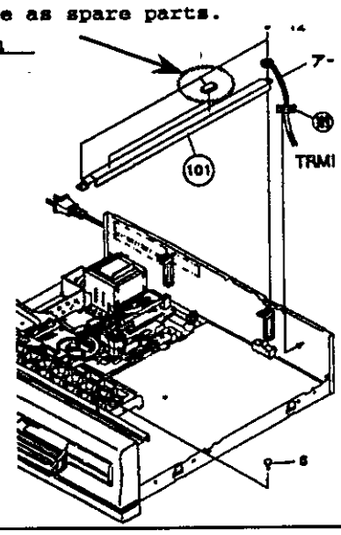 |
| VDR-V1000 [ARP2349]<br><br>VDR-V1000A [RRV1015] | 16<br><br>16 | The following part is available as spare parts.<br>No. 103 Part No. VEC1004 Description Cushion<br><br>103 | 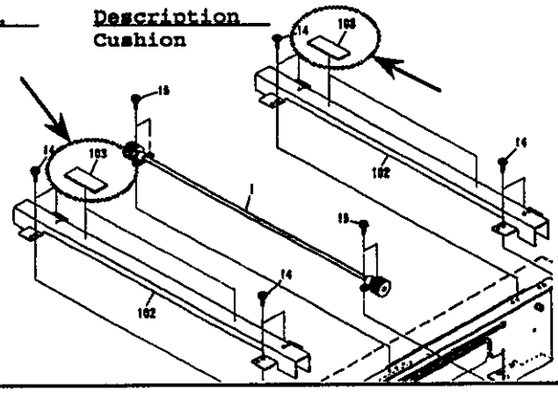 |

| MODEL [S/M NO. ] | PAGE | INCORRECT | CORRECT |
|---|---|---|---|
| LD-V4300D [ARP2311]<br><br>LD-V4400 [ARP2358] | 6<br><br>4 | The following part is available as spare parts.<br>No. Part No. Description<br>103 VEC1004 Cushion<br><br>103 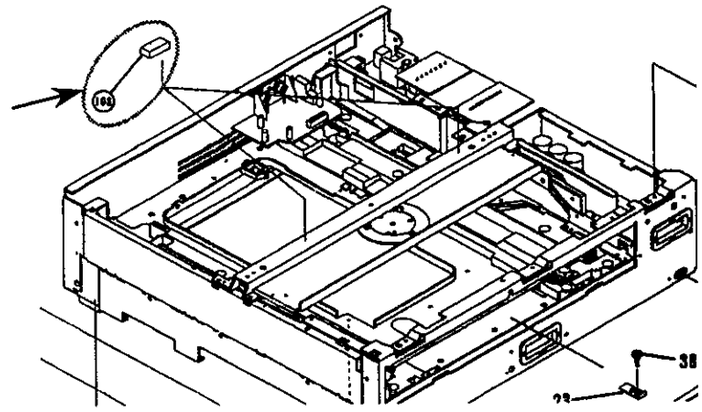 | |
| LD-S2 [ARP2093] | 4 | The following part is available as spare parts.<br>No. Part No. Description<br>104 VEC1004 Cushion<br> 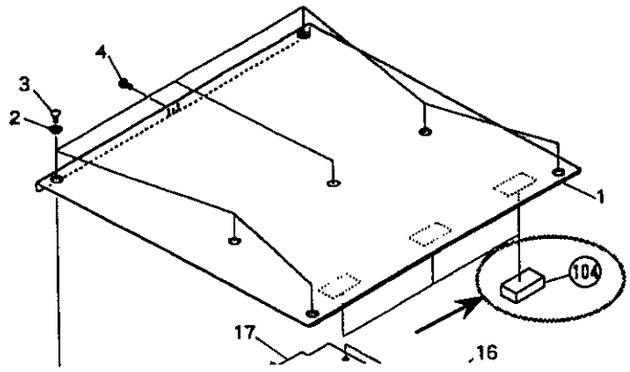 | |
| CLD-M301 -M450 -M401 [ARP2510] | 4 | The following part is available as spare parts.<br>No. Part No. Description<br>103 VEC1004 Cushion<br> 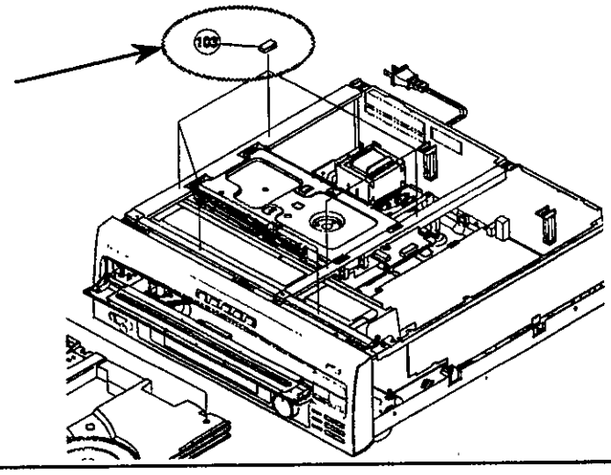 | |

| MODEL [S/M NO. ] | PAGE | INCORRECT | CORRECT |
|---|---|---|---|
| CLD-M403 [RRV1078]<br><br>CLD-M5 [ARP2622] | 1-20<br>2-3<br><br>7 | The following part is available as spare parts.<br>No. Part No. Description<br>103 VEC1004 Cushion<br> 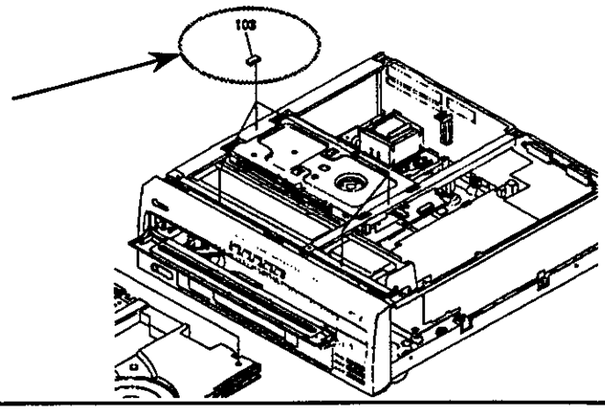 | |
| LD-V2000 [ARP1283]<br><br>LD-V2100 [ARP1598]<br><br>LD-V4100 [ARP1548] | 33<br><br>9<br><br>12 | The following part is available as spare parts.<br>No. Part No. Description<br>107 VEC1004 Cushion<br> 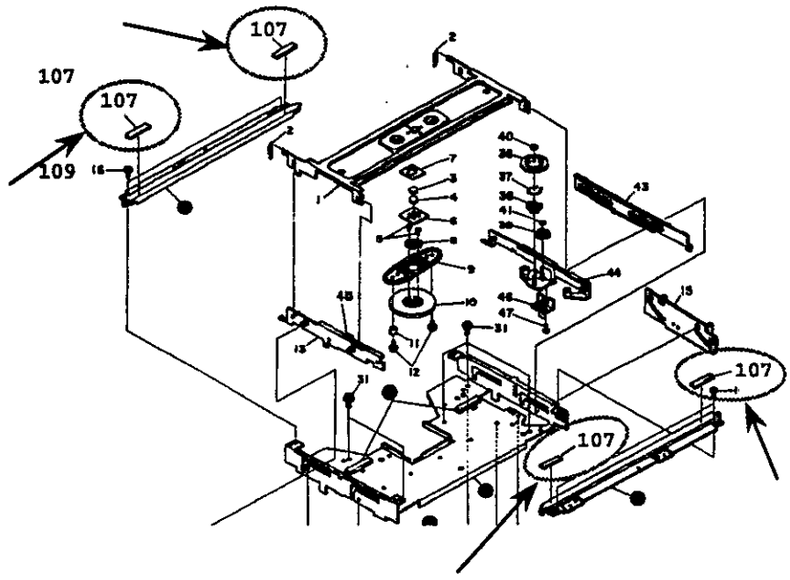 | |
| CLD-D503 [RRV1065]<br><br>CLD-D703 [RRV1064]<br><br>CLD-53 [RRV1088] | | Please add the following PCB pattern of POWER SUPPLY Assy in Service Manual | |

* This diagram is viewed from the mounted parts side.
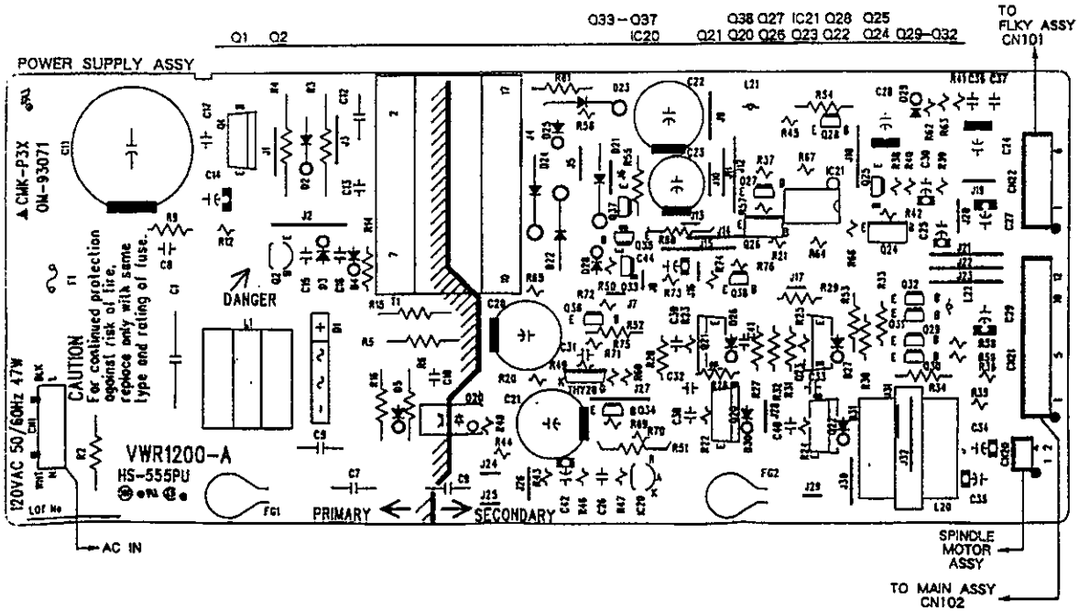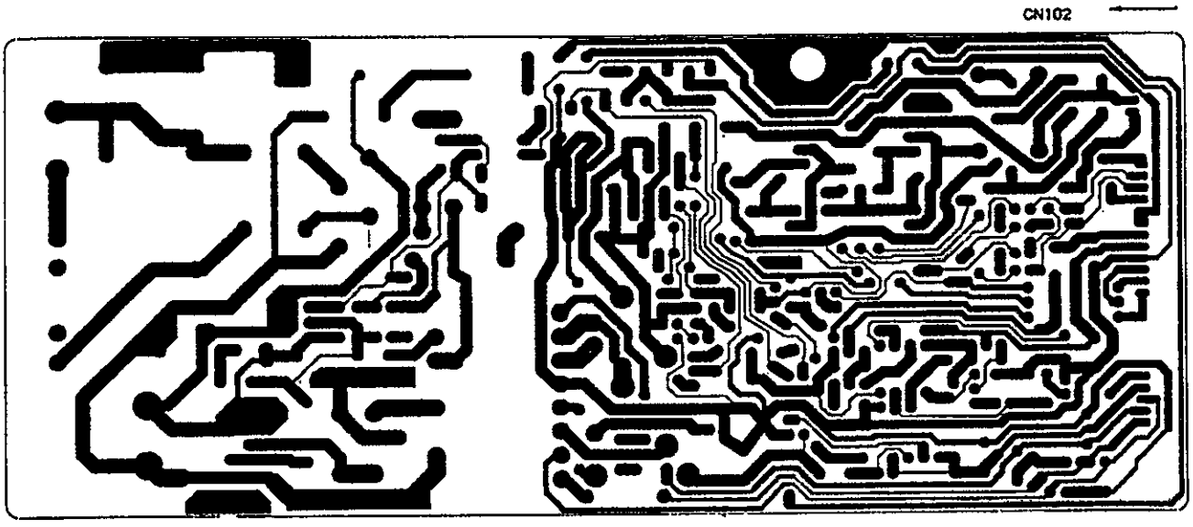
PCB – 2